# Chapter 7
# Ozone Precursors: Measurement Principle and Calibration Procedure

## Introduction

Section 182 (c)(1) of the 1990 Clean Air Act Amendments (CAAA) required the Environmental Protection Agency (EPA) to promulgate rules for enhanced monitoring to obtain more comprehensive and representative data on ozone air pollution. The EPA has revised the ambient air quality surveillance regulations in Title 40 Part 58 of the Code of Federal Regulations to include provisions for enhanced monitoring of ozone ($O_3$), oxides of nitrogen ($NO_x$), volatile organic compounds (VOCs), selected carbonyl compounds, and monitoring of meteorological parameters. The revisions require States to establish Photochemical Assessment Monitoring Stations (PAMS) as part of their existing State Implementation Plan (SIP) monitoring networks in ozone nonattainment areas classified as serious, severe, or extreme.

The principal reasons for requiring the collection of additional ambient air pollutant and meteorological data are the lack of successful attainment of the National Ambient Air Quality Standard (NAAQS) for ozone and the need to obtain a more comprehensive air quality data base for ozone and its precursors. Analysis of the data will help the EPA understand the underlying causes of ozone pollution, devise effective controls, and measure improvement.

This chapter will focus on the measurement of ozone precursor compounds in ambient air. Sampling and analytical methodology for speciated VOCs, total nonmethane organic compounds (NMOC) and selected carbonyl compounds (i.e., formaldehyde, acetaldehyde, and acetone) are specifically addressed. Discussion of the methodology for measuring $NO_x$, as required by PAMS, and issues associated with the collection of total reactive oxides of nitrogen ($NO_y$) will be limited since these topics are covered in detail in Chapter 9 of this manual. Meteorological measurements provide important information on the issues associated with ozone formation and transport and will be discussed in this chapter as well as in Chapter 10 of this manual.

The 1990 CAAA required EPA to promulgate regulations to enhance existing ambient air monitoring networks. Existing SIP stations are identified as State and Local Agency Monitoring Stations (SLAMS) and National Air Monitoring Stations (NAMS). The enhanced $O_3$ monitoring stations are a subset to SLAMS and identified as Photochemical Assessment Monitoring Stations (PAMS). Further discussion of air monitoring networks can be found in Chapter 10 of this manual.

The EPA has prepared a guidance document on enhanced $O_3$ monitoring network design and siting criteria which provides assistance regarding the number of PAMS required, station location, and probe siting criteria. The PAMS site types are described below.

Type (1) PAMS characterize upwind background and transported $O_3$ and precursor concentrations entering the MSA or CMSA and are used to identify those areas subjected to overwhelming transport. Type (2) PAMS monitor the magnitude and type of precursor emissions in the area where maximum $O_3$ precursor emissions are expected and are also suited for monitoring urban air toxic pollutants. Type (3) PAMS characterize $O_3$ precursor concentrations occurring downwind from the area of maximum emissions. Type (4) PAMS characterize extreme downwind transported $O_3$ and its precursor concentrations exiting the area and identify those areas which are potential contributors.

Appendix C of 40 CFR Part 58 requires that methods used for $O_3$ and $NO_x$ be reference or equivalent methods. Because there are no reference or equivalent methods promulgated for VOC and carbonyl measurements, Appendix C of the revisions refers agencies to the Technical Assistance Document for Sampling and Analysis of Ozone Precursors (EPA/600-R-98/161) for direction.

The use of approved alternative VOC measurement methodology (including new or innovative technologies) is permitted. This provision requires States that pursue alternatives to the methodology described herein to provide details depicting rationale and benefits of their alternative approach in their network description as required in 40 CFR Part 58, Section 58.40 - PAMS Network Establishment.

**Network Monitoring Requirements**

The minimum sampling frequency requirements for speciated VOC monitoring are prescribed in 40 CFR Part 58, Subpart E, Appendix D -Network Design for State and Local Air Monitoring Stations (SLAMS), National Air Monitoring Stations (NAMS), and Photochemical Assessment Monitoring Stations (PAMS). Section 4.3 -Monitoring Period requires, at a minimum, that $O_3$ precursor monitoring be conducted annually throughout the months of June, July, and August when peak $O_3$ values are expected. Section 4.4 - Minimum Monitoring Network Requirements specifies the minimum required number and type of monitoring sites and sampling frequency requirements based on the population of the affected MSA/CMSA or nonattainment area, whichever is larger. These monitoring requirements are outlined in Table 7-1. The minimum speciated VOC sampling frequency requirements are summarized by site type below:

- Site Type 1 - Eight 3-hour samples every third day and one additional 24-hour sample every sixth day during the monitoring period; or eight 3-hour samples on the five peak O3 days plus each previous day and eight 3-hour samples and one 24-hour sample every sixth day, during the monitoring period.

- Site Type 2 - (population less than 500,000) - Same as Site Type 1.

- Site Type 2 - (population greater than 500,000) - Eight 3-hour samples every day during the monitoring period and one additional 24-hour sample every sixth day year around.

- Site Type 3 - (population greater than 500,000) - Same as Site Type 1.

- Site Type 4 - (population more than 2,000,000) - Same as Site Type 1.

Either of the two VOC methods (automated or manual) described in this Chapter is capable of satisfying the sampling frequency and sample integration requirements. Samples collected for either method should represent a time-integrated average for the required sampling period. It is important to understand that the 3-hour sample integration period is a maximum requirement in the sense that samples can be collected more frequently at shorter sampling intervals (i.e., three 1-hour periods) but not less frequently for longer sampling intervals.

The manual methodology, where samples are collected in canisters, is primarily applicable to the less frequent sampling required for site Types 1, 3, and 4 (i.e., eight 3-hour samples every third day or during peak $O_3$ events) and the 24-hour sample requirement. The automated method, which allows for direct on-line sample collection, is primarily applicable to the more frequent sampling requirements for Site Type 2 (eight 3-hour samples every day during the monitoring period). The automated method provides a viable option for the continuous collection of hourly samples. Though it is not required, continuous collection of hourly samples also offers a more definitive assessment of the temporal and diurnal distribution of VOCs. Although it is possible to use the manual methodology for Site Type 2 sampling requirements, it is not practical due to the large number of SUMMA® canisters required.

**Table 7-1. PAMS Minimum Monitoring Network Requirements.**

| **Population of MSA/CMSA[1]** | **Required Site Type** | **Sampling Frequency Minimum VOCs [2]** | **Compounds Sampling Frequency Minimum Carbonyl [2]** |
|---|---|---|---|
| Less than 500,000 | (1)<br>(2) | A or C<br>A or C | -<br>D or F |
| 500,000 to 1,000,000 | (1)<br>(2)<br>(3) | A or C<br>B<br>A or C | -<br>E<br>- |
| 1,000,000 to 2,000,000 | (1)<br>(2)<br>(2)<br>(3) | A or C<br>B<br>B<br>A or C | -<br>E<br>E<br>- |

| | | | |
|---|---|---|---|
| More than 2,000,000 | (1)<br>(2)<br>(2)<br>(3)<br>(4) | A or C<br>B<br>B<br>A or C<br>A or C | -<br>E<br>E<br>-<br>- |

[1]Whichever area is larger.
[2]Frequency requirements are as follows:
**A** = Eight 3-hour samples every third day and one additional 24-hour sample every sixth day during the monitoring period.
**B** = Eight 3-hour samples every day during the monitoring period and one additional 24-hour sample every sixth day year-round.
**C** = Eight 3-hour samples on the 5 peak $O_3$ days plus each previous day, eight 3-hour samples every sixth day and one additional 24-hour sample every sixth day during the monitoring period.
D = Eight 3-hour samples every third day during the monitoring period.
**E** = Eight 3-hour samples on the 5 peak $O_3$ days plus each previous day and eight 3-hour samples every sixth day during the monitoring period.
**F** = Eight 3-hour samples on the 5 peak $O_3$ days plus each previous day, eight 3-hour samples every sixth day and one additional 24-hour sample every sixth day during the monitoring period.

**Target Volatile Organic Compound (VOCs) - Ozone Precursors**

For the purposes of ozone precursor sampling, the term VOCs refers to gaseous aliphatic and aromatic nonmethane organic compounds that have a vapor pressure greater than 0.14 mm Hg at 25 $^0$C, and generally have a carbon number in the range of $C_2$ through $C_{12}$. Many of these compounds play a critical role in the photochemical formation of $O_3$ in the atmosphere. Volatile organic compounds are emitted from a variety of sources. In urban areas, the dominant source may be automobiles. Table 7-2 presents the target VOCs which could be measured and reported to satisfy the requirements of 40 CFR Part 58, Subpart E. Users should consider these target compounds in developing their measurement systems and monitoring approach, and initially report and submit results for these compounds into the Aerometric Information Retrieval System (AIRS). The VOCs listed in Table 7-2 were selected primarily based on their abundance in urban atmospheres and their potential role in the formation of $O_3$. Polar compounds are not included on the target list due to their surface adsorption characteristics and the difficulty in measuring these compounds using the methodology designed for nonpolar hydrocarbons. The methodology described in this document is designed to measure the more abundant non-polar hydrocarbons or VOCs.

As experience is gained in the collection of data regarding the abundance of specific VOCs at each site, target compounds may be deleted from the list depending on the frequency of occurrence. If additional compounds are identified and occur at high frequency, they should be added to the list of PAMS target compounds.

**Table 7-2. Target Volatile Organic Compounds (VOCs)**

| AIRS Parameter Code | Target Compound Name | AIRS Parameter Code | Target Compound Name |
|---|---|---|---|

| | | | |
|---|---|---|---|
| 43203 | Ethylene | 43249 | 3-Methylhexane |
| 43206 | Acetylene | 43250 | 2,2,4-Trimethylpentane (isooctane) |
| 43202 | Ethane | 43232 | *n*-Heptane |
| 43205 | Propylene | 43261 | Methylcyclohexane |
| 43204 | Propane | 43252 | 2,3,4-Trimethylpentane |
| 43214 | Isobutane | 45202 | Toluene |
| 42380 | 1-Butene | 43960 | 2-Methylheptane |
| 43212 | *n*-Butane | 43253 | 3-Methylheptane |
| 43216 | *trans*-2-Butene | 43233 | *n*-Octane |
| 43217 | *cis*-2-Butene | 45203 | Ethylbenzene |
| 43221 | Isopentane | 45109 | *m/p*-Xylene |
| 43224 | 1-Pentene | 45220 | Styrene |
| 43220 | *n*-Pentane | 45204 | *o*-Xylene |
| 43243 | Isoprene (2-methyl-1,3-butadiene) | 43235 | *n*-Nonane |
| 43226 | *trans*-2-Pentene | 45210 | Isopropylbenzene (cumene) |
| 43227 | *cis*-2-Pentene | 45209 | *n*-Propylbenzene |
| 43244 | 2,2-Dimethylbutane | 45212 | *m*-Ethyltoluene (1-ethyl-3-methylbenzene) |
| 43242 | Cyclopentane | 45213 | *p*-Ethyltoluene (1-ethyl-4-methylbenzene) |
| 43284 | 2,3-Dimethylbutane | 45207 | 1,3,5-Trimethylbenzene |
| 43285 | 2-Methylpentane | 45211 | *o*-Ethyltoluene (1-ethyl-2-methylbenzene) |
| 43230 | 3-Methylpentane | 45208 | 1,2,4-Trimethylbenzene |
| 43245 | 1-Hexene* | 43238 | *n*-Decane |
| 43231 | *n*-Hexane | 45225 | 1,2,3-Trimethylbenzene |
| 43262 | Methylcyclopentane | 45218 | *m*-Diethylbenzene |
| 43247 | 2,4-Dimethylpentane | 45219 | *p*-Diethylbenzene |
| 43201 | Benzene | 43954 | *n*-Undecane |
| 43248 | Cyclohexane | 43141 | *n*-Dodecane* |
| 43263 | 2-Methylhexane | 43102 | TNMOC** |
| 43291 | 2,3-Dimethylpentane | 43000 | PAMHC*** |

* These compounds have been added as calibration and retention time standards primarily for the purpose of retention time verification. They can be quantitated at the discretion of the user.
** Total Nonmethane Organic Compounds
*** PAMS Hydrocarbons

The compounds listed in Table 7-2 are presented in the order of their expected chromatographic elution from a J&W® DB™-1 non-polar dimethylsiloxane capillary analytical column. The AIRS parameter code for each compound is also given in Table 7-2. Compounds with lower boiling points typically elute first on this analytical column, followed by the heavier, higher molecular weight components with higher boiling points. Concentrations of the target VOCs and unknown compounds (unidentified peaks) are calculated in units of parts per billion Carbon (ppbC). The concentration in ppbC for a

compound can be divided by the number of carbon atoms for that compound to estimate the concentration in parts per billion by volume (ppbv).

The target compound list in Table 7-3 has also been separated and classified into categories based on structure. The categories include paraffins (alkanes and cycloalkanes), olefins (alkenes and cycloalkenes), aromatics (arenes), and alkynes. Because the compound proved to be unstable and decomposed in the calibration gas cylinder, 2-methyl-1-pentene was replaced on the list of PAMS target volatile organic compounds by 1-hexene. *n*-Dodecane was added as a late-eluting retention time marker.

**Table 7-3. Classification of Target VOC's**

| **Alkyne** | **Paraffin** |
|---|---|
| Acetylene | Isopentane |
| | 3-Methylheptane |
| **Aromatic** | 2-Methylheptane |
| Styrene | *n*-Octane |
| *m*/*p*-Xylene | 2,3,4-Trimethylpentane (isooctane) |
| *o*-Xylene | Ethane |
| Toluene | Propane |
| Ethylbenzene | Isobutane |
| *n*-Propylbenzene | *n*-Nonane |
| 1,2,4-Trimethylbenzene | *n*-Butane |
| 1,3,5-Trimethylbenzene | 2,2,4-Trimethylpentane |
| 1,2,3-Trimethylbenzene | *n*-Hexane |
| Benzene | *n*-Pentane |
| Isopropylbenzene (cumene) | 3-Methylpentane |
| *m*-Ethyltoluene (1-ethyl-3-methylbenzene) | 2-Methylpentane |
| *p*-Diethylbenzene | Cyclopentane |
| *o*-Ethyltoluene (1-ethyl-2-methylbenzene) | 2,3-Dimethylbutane |
| *p*-Ethyltoluene (1-ethyl-4-methylbenzene) | Methylcyclopentane |
| *m*-Diethylbenzene | 2,4-Dimethylpentane |
| | 2,2-Dimethylbutane |
| **Olefin** | *n*-Heptane |
| 1-Hexene* | 3-Methylhexane |
| 1-Butene | 2,3-Dimethylpentane |
| Isoprene (2-methyl-1,3-butadiene) | Cyclohexane |
| 1-Pentene | 2-Methylhexane |
| *trans*-2-Butene | Methylcyclohexane |
| *cis*-2-Butene | *n*-Decane |
| *trans*-2-Pentene | *n*-Undecane |

| | |
|---|---|
| *cis*-2-Pentene<br>Propylene<br>Ethylene | *n*-Dodecane* |

*These compounds have been added as calibration and retention time standards primarily for the purpose of retention time verification. They can be quantitated at the discretion of the user.

The TNMOC measurement is the unspeciated total concentration of VOCs (typically $C_2$ through $C_{12}$) in ambient air. This measurement supplements the $O_3$ precursor compound measurements and is used for $O_3$ models that do not require speciated hydrocarbon measurement input. This estimate can be made using either the automated or manual techniques. An estimate of the TNMOC in ppbC is determined as the sum of all identified and unidentified gas chromatographic peaks in the $C_2$ through $C_{12}$ range as eluted from the analytical column and detected by the flame ionization detector (FID). The concentration in ppbC of TNMOC is calculated by taking the total area count measured and applying the response factor for propane, the primary calibration compound.

Compendium Method TO-12, preconcentration direct flame ionization detector (PDFID) techniques described later in this chapter, may also be used to determine TNMOC. Method TO-12 measures carbon-containing compounds from the sample as concentrated by cryogenic trapping and thermal desorption directly into a FID. The FID response is typically calibrated using propane to give a per-carbon response in area counts per ppbC. Compounds with a carbon number greater than $C_{12}$ may be transferred and detected using the Method TO-12 technique. Because of inherent differences between the "summation of peaks" and PDFID approaches, the two approaches do not provide equivalent TNMOC results and are not directly comparable. Since the vapor pressure of carbon-containing compounds decreases with increasing molecular weight, compounds with a carbon number above $C_{12}$ are not expected to contribute significantly (more than a few percent) to the TNMOC value.

A subgroup of TNMOC, PAMHC is the sum of peak areas for only the PAMS target compounds. Both TNMOC and PAMHC are valuable data components and the ratio PAMHC/TNMOC may indicate the conversion of ozone precursors to carbon-containing products resulting from atmospheric chemistry.

The PAMHC parameter itself is of limited value because the PAMS target list may change by geographic area. Also, PAMHC provides a broad measure of compounds that is often not substantially different from TNMOC. PAMHC could be used by a state or agency measuring only listed compounds, and then calculating the percent of unidentified compounds as:

**(Eq. 7-1)**

$$\text{Percent Unidentified} = \frac{\text{TNMOC} - \text{PAMHC}}{\text{TNMOC}} * 100$$

Alternatively, PAMHC can be used to determine the percentage of the total made up by the listed compounds.

**(Eq. 7-2)** $$\text{Percent Unidentified} = \frac{\text{PAMHC}}{\text{TNMOC}} * 100$$

This ratio for a given PAMS site usually stays within a range characteristic of the site, subject to seasonal variation.

# Methodology for the Sampling and Analysis of Volatile Organic Compounds

In accordance with the provisions for the enhanced $O_3$ ambient monitoring network requirements specified in 40 CFR Part 58, Subpart E, this section provides a discussion of the methods for measuring volatile organic compounds (VOCs) that contribute to the formation of ozone under the right atmospheric conditions. Areas addressed include:

- A review of the network monitoring requirements;
- A list of target VOCs to be measured;
- Chromatography issues associated with peak identification and quantification;
- Automated and manual methodology for collecting and analyzing samples;
- The minimum requirements of a Quality Assurance (QA) and Quality Control (QC) program;
- Guidance for validating data from automated GC systems; and

Measuring VOCs is a complex process involving the application of gas chromatographic techniques for qualitative and quantitative determination of individual hydrocarbon compounds and an estimation of total non-methane organic compound (TNMOC) content in ambient air.

Gas chromatography is a method for separating the constituents of an ambient air sample that contains VOCs. By separating the constituents they can be identified and quantified. Prior to injecting the sample into the GC it is typically conditioned (dehumidified) and concentrated. The sample is then vaporized and injected into GC along with a carrier gas (the *mobile phase*) which delivers the sample into the column which contains the *stationary phase*. The stationary phase impedes the progress of each of the sample constituent through the column by differing amounts. If the column(s) have been properly selected complete separation (*elution*) of the sample will occur with each of the sample constituents emerging from the column at different times (described as the *retention time*). As the chemicals exit the end of the column, they are detected and identified. It is typical for the results to be presented by graphically (chromatogram) and electronically.

Two methods are presented for collecting and analyzing VOC samples: an automated method and a manual method. Ideally, agencies responsible for designing, implementing,

and operating their $O_3$ monitoring networks will satisfy their monitoring requirements by using some combination of the automated and manual gas chromatographic approaches. Even if agencies primarily choose the automated methodology, manual sampling and analysis capability are needed to fulfill the 24-hour sample requirement; verify the proper operation of the automated systems; characterize the quality of the collected data; address the identification of unknown compounds; and enhance the representativeness of the monitoring network.

Users are ultimately responsible for equipment selection, set-up, parameter optimization, and preparation of Standard Operating Procedures (SOPs) for their specific network. Because of the complexity of the measurement process and the numerous choices of instrumentation (e.g., sampling equipment, gas chromatographs, data acquisition hardware and software, etc.), the method descriptions presented in this manual are generic. Background information on the potential benefits and limitations of the methods are also provided.

The subsections of this section will discuss the issues of automated and manual sampling techniques and the GC/FID technique utilized to identify and quantify the collected sample. In addition, relevant QC/QA topics will be discussed.

## GC/FID Analytical Methodology for the Quantification of VOCs

The following section discusses the basic operating principles of the gas chromatography with flame ionization detection (GC/FID) methodology used to measure ambient VOCs either as an independent analytical system or as part of an automated sampling/analytical system. Related chromatography issues or concerns regarding peak identification and quantitation, sample moisture removal, calibration, primary and retention time standard preparation and humidification, and analytical column selection and configuration are also discussed.

### Gas Chromatography with Flame Ionization Detection

Gas chromatography with flame ionization detection is the established analytical technique for monitoring VOCs in ambient air. The sensitivity, stability, dynamic range, and versatility of GC/FID systems make them extremely effective in measuring very low concentrations of VOCs. The gas chromatograph may be an independent analytical system or a component of an automated sampling/analytical system.

Typically, a sample taken from an urban environment contains more than 100 detectable compounds that may reasonably be separated into quantifiable peaks. These compounds are generally present at concentrations varying from less than 0.1 ppbC to greater than 500 ppbC with the typical concentration ranging between 0.1 to 50 ppbC. Detection of typical urban concentration levels generally requires that samples be passed through a preconcentration trap to concentrate the compounds of interest and separate them from components of the sample that are not of interest (i.e., air, methane, water vapor, and carbon dioxide).

The GC/FID systems required for VOC measurement consist of the following principal components:

- Sample introduction;
- Sample conditioning for moisture removal (optional);
- Sample concentration;
- Sample focusing for optimal sample injection and improved chromatographic separation (optional);
- Gas chromatography; and
- Flame ionization detection.

An air sample may be introduced to the measurement system directly from ambient air, an integrated canister, or a calibration gas cylinder.

The sample is optionally passed through a sample conditioning system for moisture removal and then concentrated using an adsorbent or glass bead trap that is cryogenically cooled using liquid nitrogen, liquid carbon dioxide, or thermoelectric closed-cycle coolers.

The concentrated sample is then thermally desorbed and introduced into the carrier gas prior to being introduced to the analytical column(s).

Sample refocusing is optional and may be performed using a cryogenically or thermoelectrically cooled secondary trap. Sample refocusing may also occur at the head of the cryogenically cooled analytical column. Sample focusing is used to concentrate the desorbed sample into a narrow band for injection onto the capillary GC analytical column. The focused sample is thermally desorbed rapidly and injected onto the analytical column of the gas chromatograph as a "plug," which maximizes GC column resolution and results in improved $C_2$ and $C_3$ chromatographic separation and peak shape. Sample focusing is effective when low carrier gas flow rates (1-2 mL/minute) are used.

The analytical column separates the sample into individual components based on the distribution equilibrium between the mobile (carrier gas) and stationary (liquid column coating) phases. The separated components elute from the column and enter the FID, where a signal is generated based on carbon response.

The time of elution and detection (retention time) is the primary basis for the identification of each compound. Retention time units are typically expressed in minutes and are specific to the conditions of the GC system used. The identification of sample components is determined by matching the known retention times of the components in a retention time standard with those in the sample.

It is desirable to confirm GC peak identification periodically using a mass spectrometric detector, if available.

The FID is the most widely used, universal GC detector. As a general observation, the FID provides good sensitivity and uniform response to *n*-alkanes based on the number of carbon atoms in the compound. For unsaturated, cyclic, or aromatic hydrocarbons, the FID response is less predictable. The FID is, therefore, well suited for ambient air analysis since a majority of VOCs in ambient air are hydrocarbons. This uniformity of FID response to *n*-alkanes simplifies calibration in that a single hydrocarbon compound (e.g., propane) can be used to calibrate the detector response for all hydrocarbons. This FID response characteristic also provides for the unique capability of estimating the concentrations of not only the target peaks (identified) but also the unidentified components of the sample.

Some automated GC systems require a two-component calibration mixture (e.g., propane and benzene) due to the use of dual analytical columns. By summing all identified and unidentified chromatographic peak areas, a useful estimate of the concentration of TNMOC is provided. The FID also has a broad linear dynamic range of response, allowing for the analysis of samples with concentrations ranging from picogram (using preconcentration) to microgram quantities of hydrocarbons.

Modern GC technology, coupled with sophisticated data acquisition and processing software, provides for reasonable estimates of both the identity and quantity of the target species to the extent that the analytical column is capable of separating them and the system has been adequately characterized and calibrated. The retention characteristics of the analytical column must first be determined for each target compound using pure components or mixtures of pure components diluted with a humidified inert gas.

**Identification and Quantification Issues**

Although GC/FID systems are acceptable for meeting the objectives of PAMS, the GC/FID technique has some inherent limitations. Chromatographic systems using GC/FID rely primarily on the practical use of retention times to make compound identifications for each chromatographic peak.

Gas chromatographic peak misidentifications typically occur as a result of retention time shifting and interferences due to co-eluting non-target compounds. Modern GC capillary columns are generally capable of adequately separating the targeted compounds; however, co-elution of unidentified species with the targeted species can and does occur. The identification and quantitative uncertainty resulting from co-elution will depend on the type of unidentified compound and the abundance relative to the affected target VOC. The target VOCs are exclusively hydrocarbons which are primarily emitted into the atmosphere by mobile sources and generally dominate most urban samples. Concentration estimates for substituted hydrocarbon species such as oxygenated or halogenated hydrocarbons using FID are uncertain since these compounds do not respond to the FID solely on a per carbon basis. Generally, the identification and quantification of a targeted compound will not be significantly affected unless a substituted species, at a significant concentration, co-elutes with the target compound.

Quantitative errors can be reduced by careful attention to quality control (calibration details and system blanks), performing frequent response checks using canister samples containing target compound mixtures of known concentration, and periodic performance audits or proficiency studies using independent reference materials. Analytical system blank analysis of humidified, ultra zero air is performed to characterize the background concentration of VOCs present in the measurement system. If unacceptable levels of background system contamination occur the data will be quantitatively compromised. Sources of contamination can be related to the:

- Source of humidified, ultra zero air;
- Sample to trap transfer line;
- Carrier gas and filters; and
- Analytical columns.

The effort devoted to peak identification, confirmation, and quantification is important to the quality of the collected data.

**Sample Moisture Issues**

The effects of moisture must be considered in any measurement program where sample concentration is required. Cryogenic concentration techniques are commonly used, especially for light hydrocarbons. The vast difference in boiling points of the $C_2$ and $C_{12}$ hydrocarbons also may require the use of sub-ambient temperature chromatography to adequately separate the entire range of compounds.

The co-collection of moisture in the concentration trap and subsequent injection of water onto the analytical column can cause a number of problems and adversely affect the overall quality of the data generated. These problems include:

- Cryogenic trap freezing which results in reduced sample flow or trap blockage;
- Chromatographic column plugging due to ice formation and subsequent retention time shifting, peak splitting, and poor peak shape and resolution which result in incorrect peak identification and peak naming;
- Chromatographic column deterioration (especially with $Al_2O_3$ columns);
- Baseline shifts due to elution of the water profile;
- FID flame extinction;
- Poor reproducibility and precision of the data generated;
- Competition for active sites and adverse effects on adsorbent concentration traps; and
- Suppression of the FID signal.

In addition, if “cold spots” exist in the sample concentration or transfer system, water can collect and cause sample carryover or “ghost” peaks in subsequent sample analyses. This carryover may affect the data by causing chromatographic interferences which affect the resolution, identification, and quantitation of the components of interest.

Moisture removal from the sample stream prior to sample concentration minimizes these problems and also allows larger sample volumes to be concentrated, thus providing greater detection sensitivity. Moisture related problems can be alleviated by various water management methods that include:

- Nafion® driers (Perma-Pure® Inc.);
- selected condensation at reduced temperatures;
- selective temperature desorption;
- non-cryogenic hydrophobic adsorbent sample concentration traps;
- dry gas purging; and
- selective multibed sorbent trapping.

However, some methods used to remove moisture from the sample may result in the loss of polar VOCs which affects the TNMOC measurement. This effect is variable, based on drier efficiency and compound selectivity. A drier that minimizes both polar VOC loss and the potential for introducing contaminants into the system should be considered.

## Calibration Standards

Calibrating a GC/FID system to measure VOCs requires two distinctly different types of calibration mixtures: a *primary standard* to calibrate detector response for gas chromatographic peak quantitation (primary calibration standard) and a qualitative mixture of known hydrocarbon compounds to determine gas chromatographic peak retention times (*retention time standard*).

## Primary Calibration Standard

The GC/FID response is calibrated in ppbC using a propane primary calibration standard referenced to a National Institute of Standards and Technology (NIST) Standard. A propane and benzene mixture is recommended for systems that utilize dual columns or column switching configurations that use two FIDs. Standard Reference Materials (SRMs) from NIST and Certified Reference Materials (CRM) from specialty gas suppliers are available for this purpose. NIST currently has a fifteen component ambient non-methane organics in nitrogen SRM available (SRM 1800) for use as a reference or primary calibration standard. SRM 1800 contains both propane and benzene.

Less expensive working standards needed for calibration verification over the range of expected concentrations can be prepared by the user or purchased from a gas supplier, provided they are periodically referenced to a primary SRM or CRM. The primary calibration standards must be humidified to reflect the ambient air matrix being analyzed. Detailed procedures for preparing humidified standards and for diluting standards is given in the Technical Assistance Document for Sampling and Analysis of Ozone Precursors (EPA/600-R-98/161).

It is also feasible to incorporate the primary calibration standard into the retention time standard described below by confirming the concentration of propane and benzene in the retention time mixture using a primary SRM or CRM.

**Retention Time Calibration Standard**

The retention time calibration standard is a multiple-component mixture containing all target VOCs at varying concentration levels. The retention time calibration standard is a humidified working standard used during the initial setup of the GC/FID system to optimize critical peak separation parameters and determine individual retention times for each of the target compounds. The retention time calibration standard is also used during the routine operation of the GC/FID system as a QC standard for verifying these retention times.

The response of the GC/FID to selected hydrocarbons in this standard can be used to monitor system performance and determine when system maintenance or recalibration of the FID using the primary calibration standard is necessary. The concentration of each compound in the retention time standard need not be directly referenced to the SRM or CRM (as is the case for the primary calibration standard); rather, the concentration of each compound can be determined with reasonable accuracy using the FID propane or benzene carbon response factor from the calibrated GC system.

A multiple-component high pressure mixture containing the target VOCs can be obtained from a specialty gas supplier. Multiple-component mixtures can also be prepared by the user to confirm the peak identifications using the retention time standard.

**Calibration Standard Preparation**

The *primary propane and benzene calibration standards* must be humidified to ensure integrity and stability. Water vapor has been shown to improve the stability of low pressure VOC gas mixtures in SUMMA® canisters.

A stock multiple-component retention time calibration standard containing the compounds of interest may be prepared at a concentration level approximately 100 times that of the anticipated working standard concentration. The stock standard can be prepared by blending gravimetrically weighed aliquots of neat liquids or by adding aliquots of gaseous standards with an inert diluent gas into an evacuated SUMMA® passivated stainless steel canister or other inert container. Concentrations are calculated based on the amount of compounds and diluent injected and the final canister pressure, using ideal gas law relationships.

The *stock retention time calibration standard* is used to prepare humidified retention time working standards at the ppbC level. It is not necessary to determine exact component concentrations in the multi-component mixture because the working retention time standard should not be used to determine compound specific response factors. However, the approximate concentration of the stock standard must be known in order to prepare

the working retention time standards. Preparation of the working standards is accomplished by syringe injection of a gaseous aliquot of the stock standard into a SUMMA® passivated stainless steel canister or other inert canister, and subsequently humidifying for use.

Detailed procedures for the preparation of calibration standards are given in the Technical Assistance Document for Sampling and Analysis of Ozone Precursors (EPA/600-R-98/161).

**Column Configurations**

The chromatographic column configurations generally used for VOC monitoring programs incorporate single-column, single-detector, or dual-column, dual-detector applications. The simplest analytical column configuration involves the use of a single column with a single FID. Analyzing the full range of $C_2$ through $C_{12}$ target hydrocarbons using a single analytical column may result in less than optimal separation for either the light or heavy hydrocarbons, depending on the analytical column chosen. For example, to improve resolution of the $C_2$ through $C_4$ hydrocarbons, a thick liquid-phase fused silica or Porous Layer Open Tubular (PLOT) column at sub-ambient column oven temperatures may be desirable. However, PLOT columns generally result in less than optimal resolution of the $C_5$ through $C_{12}$ hydrocarbons. Likewise, PLOT columns increase retention times of the $C_{10}$ through $C_{12}$ hydrocarbons and require longer sample analysis time. If the heavier hydrocarbons are not eluted from the thick phase or PLOT columns, the TNMOC measurement may be affected, and carryover and ghost peaks may result.

In order to improve the separation characteristics for the light hydrocarbons ($C_2$ through $C_4$) as well as the heavier hydrocarbons ($C_5$ through $C_{12}$), a dual-column, dual-detector configuration should be considered. In this case, two columns can be judiciously selected to provide optimal separation of both light and heavy hydrocarbons without sub-ambient column oven temperatures. Because both columns are generally contained in one gas chromatographic oven for automated applications, columns must be selected that will provide the desired separation with a single GC oven temperature. Dual column systems may be configured with the analytical columns in parallel, operating either concurrently or sequentially. Pre-column and post-column switching valves and the Deans® switch have been used to accommodate these dual-column configurations.

**Column Selection**

Column selection for analysis of the target VOCs is dictated by the target compound resolution requirements and other practical and cost considerations, such as the need to minimize cryogen consumption and total sample analysis time. Selecting columns that will provide the desired separation of the $C_2$ through $C_4$ hydrocarbons without cooling the column oven to sub-ambient temperature decreases cryogen consumption significantly.

Figure 7-1 is a schematic of a GC/FID analyzer fitted with duel columns and shown in a typical configured with ancillary equipment.

Figures 7-2 and 7-3 are example chromatograms of retention time calibration standards containing the PAMS target compounds as eluted from a *PLOT* column (0.32 mm I.D., 50 m, 5 micrometer, $Al_2O_3/Na_2SO_4$) and a *BP1* column (0.22 mm I.D., 50 m, 1 micrometer, SGE, Incorporated ). Since these columns have been successfully used by others, users should give primary consideration to these column types during their column selection process.

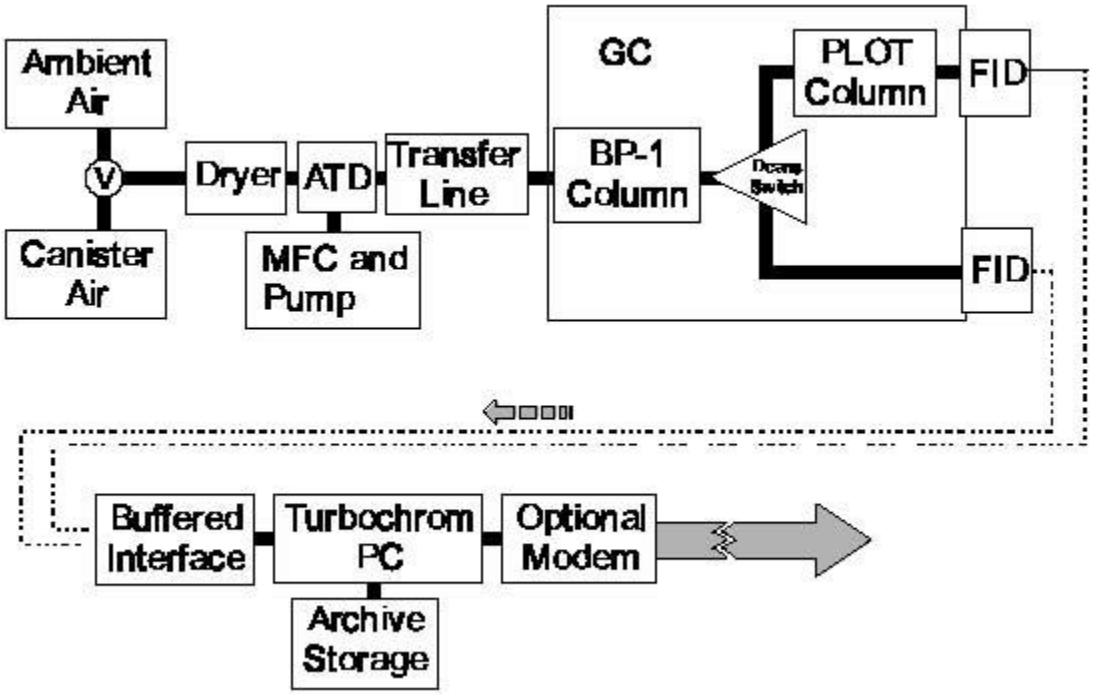


Figure 7-1. Schematic of a GC/FID analyzer fitted with duel columns and shown in a typical configured with ancillary equipment.

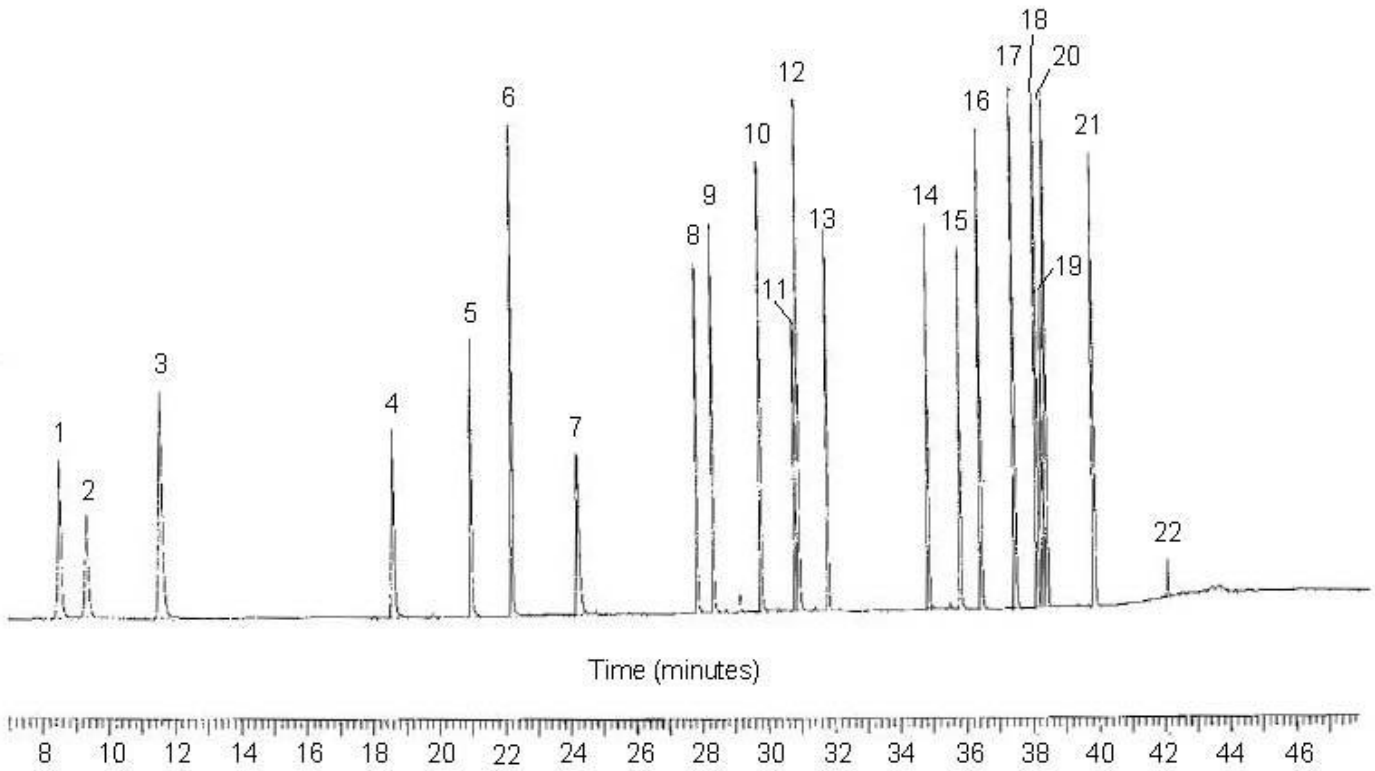


| | |
|---|---|
| Column: | HP $Al_2O_3/Na_2SO_4$, 50m x 0.32mm x 5µm |
| Carrier: | Helium, ~2.5ml/min |
| Initial Temp: | 45°C, 15 minutes |
| Rate 1: | 5°C/min |
| Temp 2: | 170°C |
| Rate 2: | 15°C/min |
| Final Temp: | 200°C, 6 minutes |

| Peak # | AIRS Code | Compound Name | Peak # | AIRS Code | Compound Name |
|---|---|---|---|---|---|
| 1 | 43202 | Ethane | 12 | 43221 | Isopentane |
| 2 | 43203 | Ethylene | 13 | 43220 | n-Pentane |
| 3 | 43204 | Propane | 14 | 43226 | trans-2-Pentene |
| 4 | 43205 | Propylene | 15 | 43224 | 1-Pentene |
| 5 | 43214 | Isobutane | 16 | 43227 | cis-2-Pentene |
| 6 | 43212 | n-Butane | 17 | 43244 | 2, 2-Dimethylbutane |
| 7 | 43206 | Acetylene | 18 | 43284 | 2, 3-Dimethylbutane |
| 8 | 43216 | trans-2-Butene | 19 | 43263 | 2-Methylpentane |
| 9 | 43280 | 1-Butene | 20 | 43230 | 3-Methylpentane |
| 10 | 43217 | cis-2-Butene | 21 | 43243 | Isoprene |
| 11 | 43242 | Cyclopentane | 22 | 43246 | 2-Methyl-1-Pentene |

**Figure 7-2. Example Chromatogram for the PAMS Target Compounds from the PLOT Analytical Column**



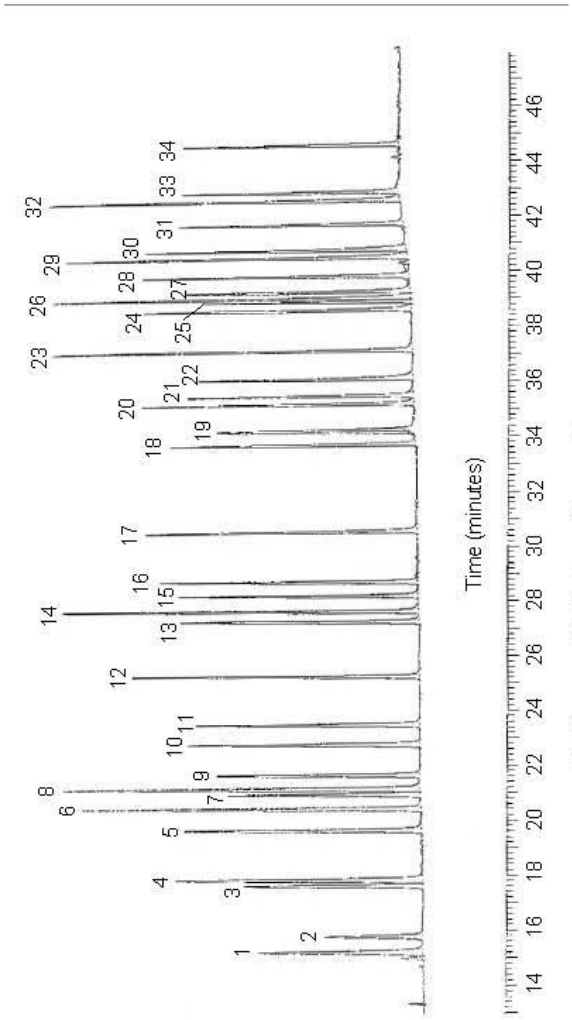


| | |
|---|---|
| Column: | SGE, Inc. BPI, 50m x 0.22mm x 1µm |
| Carrier: | Helium, ~2.5ml/min |
| Initial Temp: | 45°C, 15 minutes |
| Rate 1: | 5°C/min. |
| Temp 2: | 170°C |
| Rate 2: | 15°C/min. |
| Final Temp: | 200°C, 6 minutes |

| Peak # | AIRS Code | Compound Name |
|---|---|---|
| 1 | 43231 | Hexane |
| 2 | N/A | Unknown |
| 3 | 43262 | Methylcyclopentane |
| 4 | 43247 | 2, 4-Dimethylpentane |
| 5 | 45201 | Benzene |
| 6 | 43248 | Cyclohexane |
| 7 | 43263 | 2-Methylhexane |
| 8 | 43291 | 2, 3-Dimethylpentane |
| 9 | 43249 | 3-Methylhexane |
| 10 | 43250 | 2, 2, 4-Trimethylpentane |
| 11 | 43232 | n-Heptane |
| 12 | 43261 | Methylcyclohexane |
| 13 | 43252 | 2, 3, 4-Trimethylpentane |
| 14 | 45202 | Toluene |
| 15 | 43960 | 2-Methylheptane |
| 16 | 43253 | 3-Methylheptane |
| 17 | 43233 | n-Octane |
| 18 | 45203 | Ethylbenzene |
| 19 | 45109 | m/p-Xylene |
| 20 | 45220 | Styrene |
| 21 | 45204 | O-Xylene |
| 22 | 43235 | n-Nonane |
| 23 | 45210 | Isopropylbenzene |
| 24 | 45209 | n-Propylbenzene |
| 25 | 45212 | m-Ethyltoluene |
| 26 | 45213 | p-Ethyltoluene |
| 27 | 45207 | 1, 3, 5-Trimethylbenzene |
| 28 | 45211 | o-Ethyltoluene |
| 29 | 45208 | 1, 2, 4-Trimethylbenzene |
| 30 | 43238 | n - Decane |
| 31 | 45225 | 1, 2, 3-Trimethylbenzene |
| 32 | 45218 | m-Diethylbenzene |
| 33 | 45219 | p-Diethylbenzene |
| 34 | 43954 | n-Undecane |

o:\ejfmo.m0797\peak\compound.rpt

**Figure 2-6. Example Chromatogram for the PAMS Target Compounds from the BP1 Analytical Column**

**Figure 7-3. Example Chromatogram for the PAMS Target Compounds from the BP1 Analytical**

### Pre-measurement Chromatographic System Verification

Prior to making speciated VOC measurements using an automated GC system, the level of system operation must be thoroughly documented. Information collected during this process is important in characterizing the system operation and establishing a baseline for performance. The information from the pre-measurement system verification is used to determine system specific target analyte retention times, relative retention times, identification of co-eluting compounds and matrix effects, internal standard retention times, interferences, and detection limits.

Refer to the Technical Assistance Document for Sampling and Analysis of Ozone Precursors (EPA/600-R-98/161) for guidance on the procedures for pre-measurement verifications for PAMS.

## Automated Method for Collecting and Analyzing Volatile Organic Compound Ozone Precursor Samples

The rigorous sampling frequency requirements of enhanced $O_3$ monitoring (e.g., eight 3-hour samples every day during the monitoring period) makes automated GC methodology a viable, cost-effective approach for obtaining VOC measurements at all sites within a network. An automated GC system offers an additional advantage in its inherent capability to provide short-term (e.g., 1-hour) measurements on a continuous basis for long time intervals.

The following description of automated methodology is based on currently available commercial automated GC systems. The discussion will focus on the generic configuration and operation of automated GC systems. The selected GC system must be capable of automated sample collection, analysis, and data acquisition on site and must be housed in a temperature-controlled shelter.

The primary components of an automated GC are a sample introduction system, sample conditioning system (for moisture removal), sample concentration system (for sample enrichment), cryofocusing trap (as an option for improving peak shape and resolution), gas chromatograph with FID(s), and a data acquisition and processing system. Commercially available systems incorporate many variations of the primary components of an automated GC system (See Figure 7-1).

### Sample Collection

Samples collected for automated analysis should represent a time-integrated average for the required sampling period. In the case where an integrating canister is used to collect the sample, the canister should be filled at a constant flow rate over the full integration period minus the time required to transfer a sample to the primary trap and purge and evacuate the canister. In the case where the sample is collected directly onto the primary

concentration trap, the sample should be collected at a constant flow rate for the full integration period minus the time required to desorb the sample onto a secondary trap or onto the analytical column and perform system operations to accommodate the next sample collection.

The minimal sample integration time required to constitute a 1-hour sample is 40 minutes. Additional provisions must be made to meet the 24-hour sample requirement. A manual approach to 24-hour sample collection and analysis is discussed in a subsequent section of this chapter.

The $O_3$ precursor compounds are collected from a sample manifold with a probe (Figure 7-4). If automated calibration techniques that periodically flood the manifold with calibration standards are to be applied for the criteria pollutants, a separate manifold would be required to support the VOC and carbonyl components of the PAMS program.

The air sample can be introduced to the automated GC system directly from the air sample manifold using a mass flow controller or other flow control device at a constant flow rate over the prescribed sample integration time. As an alternative, the air sample may be collected into an integrating canister at a constant flow rate over the prescribed sample integration time, and then supplied to the sample concentration trap at the end of the integrating period. For purposes of calibration and proficiency studies, and to meet the 24-hour sampling requirements, samples may also be introduced directly from pressurized SUMMA® canisters.

Moisture is removed from the sample stream for automated GC analysis to prevent or reduce the detrimental effects of moisture on the primary concentration trap, analytical column(s), and detector(s). Moisture removal also allows for analysis of larger sample volumes, which provides lower detection limits, and is crucial to the measurement of very low concentration VOCs.

Some commercially available automated GC systems incorporate the use of Nafion® membrane sample drying devices. New developments in moisture removal include controlled temperature vaporization, selective temperature condensation, hydrophobic concentration traps, and micro-scale purge-and-trap. The loss of polar VOCs may result from moisture removal using some of these techniques and this loss of polar VOCs may significantly affect the TNMOC measurement. The user must characterize the effects of their particular sample conditioning method on the TNMOC measurement and target VOCs of interest.

Ambient air samples are primarily concentrated using multi-bed sorbent or cryogenically-cooled deactivated glass bead traps. Sampling time and flow rate are typically used to determine the total volume concentrated onto the primary trap. Multi-bed sorbent traps (Carbotrap® and Carbosieve®) or cryogenically cooled glass bead traps are required to efficiently collect the complete range ($C_2$ through $C_{12}$) of VOCs for $O_3$ precursor monitoring.

The concentrated sample is thermally desorbed onto a secondary cryofocusing trap (optional) or onto the head of the cooled GC column to focus the desorbed sample into a small volume or "plug." The sample volume is then desorbed for analysis by the GC/FID system.

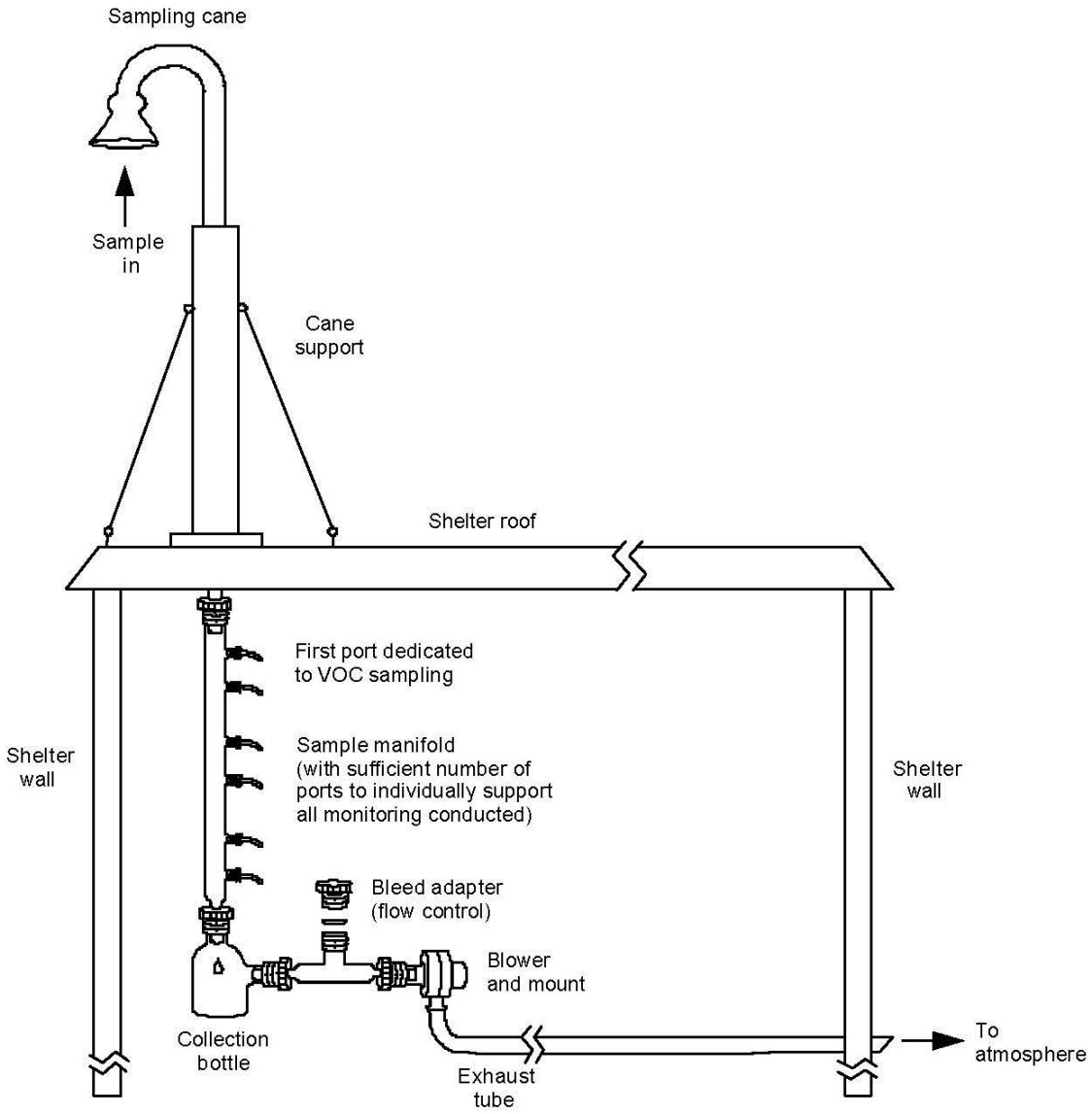


**Figure 7-4. Example of a vertical configuration of a PAMS sample probe and manifold.**

**Sample Analysis**

Following sample collection and concentration, the sample is thermally desorbed directly onto the analytical column(s). The analytical column may be cryogenically cooled to aid in focusing the desorbed sample into a narrow band prior to chromatographic separation. Cryofocusing improves the peak separation and in particular the resolution of $C_2$ and $C_3$ hydrocarbons. This technique is especially helpful when the sample is desorbed from the concentration trap at low flow rates.

The analytical column chromatographically separates the sample into components for subsequent detection by the FID. The signal from the FID is then acquired and processed using a PC-based data acquisition and processing system.

Commercially available GC systems are typically configured with the appropriate analytical column(s) to separate the VOCs of interest. The user must characterize the performance of the system operation prior to use by conducting the pre-measurement system verification. Commercial GC systems may incorporate the use of single or dual-column configurations (in series or parallel) that may require sub-ambient oven temperature programs.

It is important to note that systems that eliminate the need for sub-ambient column oven temperatures reduce the overall cryogen consumption of the system. New developments in carrier gas electronic pressure programming and control have greatly improved peak resolution and retention time stability for some automated GC systems.

Automated GC systems employ the use of a PC-based data acquisition and processing system for peak integration and quantitation. Data acquisition and processing systems are comprised of hardware and software that perform data acquisition, peak detection and integration, peak identification by retention time, post-run calculations and quantitation, calibration, peak reintegration, user program interfacing, and hard copy output. Data are automatically stored on magnetic media (e.g., hard disk or floppy diskette).

The GC data acquisition and processing software is developed and supplied by the GC manufacturer and should contain the necessary algorithms to acquire, integrate, and identify the chromatographic peaks by retention time. The system should be capable of producing an electronic and hard copy report file that contains the information needed to identify the sample and a listing of all peaks detected in the chromatogram. This listing should contain the peak name if it is a target compound. All detected peaks (both target and unidentified) should be reported with a concentration, in ppbC, and a retention time. The listing should also contain the TNMOC estimate calculated by summing the concentrations of all peaks (both target and unidentified) detected in the chromatogram.

**Analytical System Calibration**

The detector response of the analytical system should be calibrated with multiple level propane primary standards over the expected sample concentration range. Benzene is suggested as a second primary standard to calibrate dual-column systems. These dual-column systems employ a Deans® switch or other column switching techniques. Benzene may also be used to quantitate the target compounds when using a single-column approach. The primary calibration standard is used to generate a response factor per carbon atom for determining the concentration of each target VOC, as well as the TNMOC. It is impractical and unnecessary to determine compound specific response factors for each of the target VOCs presented in Table 7-2 because the carbon response of the FID to these compounds is approximately linear.

For a known, fixed sample volume, concentration is proportional to the area under the chromatographic peak. The area is converted to ppbC using the following equation:

(Eq. 7-3) $$C_A = RF\ (AC)$$

Where:

| | | |
|---|---|---|
| Ca | = | Concentration (ppbC) |
| RF | = | Response Factor, ppbC/area count |
| AC | = | Area Count |

The response factor (RF) is an experimentally determined calibration constant (ppbC/area count), and is used for all compound concentration determinations. The response factor is determined by the analysis of the primary standard using the following equation:

(Eq. 7-4) $$RF = \frac{3(C_B)}{MAC}$$

Where:

| | | |
|---|---|---|
| 3 | = | Carbon Atoms in Propane (6 when benzene is used as a second calibration standard) |
| $C_B$ | = | Concentration of the NIST Propane Standard (ppbv) |
| MAC | = | Mean Area Count, determined from the analyses of multiple levels or multiple injections of the primary standard |

The retention time of target compounds is determined by analyzing the retention time calibration standard as described in an earlier section of this chapter. This standard is analyzed in triplicate, at a minimum, to establish the correct retention times and retention time windows for the peaks of interest.

The primary standard (discussed in a previous section) is used to perform a calibration check of the analytical system in order to determine system variability and overall performance. The calibration and retention time checks may be performed concurrently using the retention time calibration standard. The compound concentrations and retention times should compare within the limits of the data quality objectives established for the monitoring program. If they do not, the analytical system should be recalibrated.

**Sampling Parameters**

Determination of optimum sampling parameters is dependent on field conditions (i.e., expected compound concentration ranges, humidity, temperature, etc.), desired sensitivity, cryogen consumption, and sample trapping efficiency. During the setup period, these sampling parameters should be evaluated to determine the optimum conditions for each. Primary sampling parameters are the sample collection frequency (1 sample each hour) and the minimum sample collection or integration time (40 minutes).

For hourly sampling, the minimum sample collection or integration time is 40 minutes. A sample collection volume of 200 to 600 mL is recommended. The sample volume used requires a trade-off between the required detection limit and potential moisture interference problems. Longer sample integration times may be implemented by using an intermediate sample collection or integration device. This device usually consists of a sample integration vessel configured to provide integrated collection of one sample while the previously collected sample is being analyzed. Advantages to using an intermediate sample integration device include longer integration times and reduced cryogen use during the concentration step of sample analysis.

## Manual Method for Collecting and Analyzing Volatile Organic Compound Ozone Precursor Samples

The manual methodology for obtaining volatile organic compound (VOC) measurements involves collecting time-integrated, whole air canister samples for subsequent analysis at a central laboratory. Under the minimum network monitoring requirements in 40 CFR Part 58, Subpart E, States must obtain 3-hour and 24-hour integrated measurements of VOCs at specified sample collection frequencies based on individual PAMS site type requirements. The sample collection frequencies range from one 24-hour sample every sixth day to eight 3-hour samples every day. Additional discussion of sample collection methodology is provided in EPA Compendium Method TO-15.

Application of the manual methodology to the enhanced $O_3$ monitoring regulations requires the collection and analysis of a large number of canister samples. An integrated, well planned sample collection and analysis program is necessary to address the numerous aspects of a canister-based monitoring operation, which include canister cleaning and transport, sample collection procedures and frequency, analysis procedures, and data acquisition and reporting.

The following sections generally describe multiple-event and single-event canister sampling equipment, and their basic operation.

**Sample Collection**

This section describes the configuration and use of SUMMA® passivated canisters and associated multiple- and single-event sample collection systems. These systems provide samples for subsequent analysis at a central laboratory using a GC/FID analytical system with computerized data reduction and reporting capabilities.

Canister sample collection systems should be capable of unattended operation in order to allow collection of samples in accordance with the network monitoring requirements presented in Table 7-1.

Collecting time-integrated whole ambient air samples for subsequent analysis of target VOCs is a widely accepted practice. Samples collected should represent a time-integrated average for the required sampling period (i.e., collected at a constant flow rate over the full collection period). Time-integration techniques generally involve the use of electronic and/or mechanical devices to facilitate sampling. Canister sampling systems are available commercially or can be custom built by the user for a specific application.

Multiple-event sample collection systems are needed to meet the 3-hour, around-the-clock collection frequency. Back-to-back collection of the individual 3-hour samples may not be practical using single-event systems due to the required attendance of an operator to change the sample canisters between events.

**Multiple-event Sample Collection Equipment**

A typical multiple-event sample collection system configuration is presented in Figure 7-5. The multiple-event canister sample collection system is comprised of the following primary components:

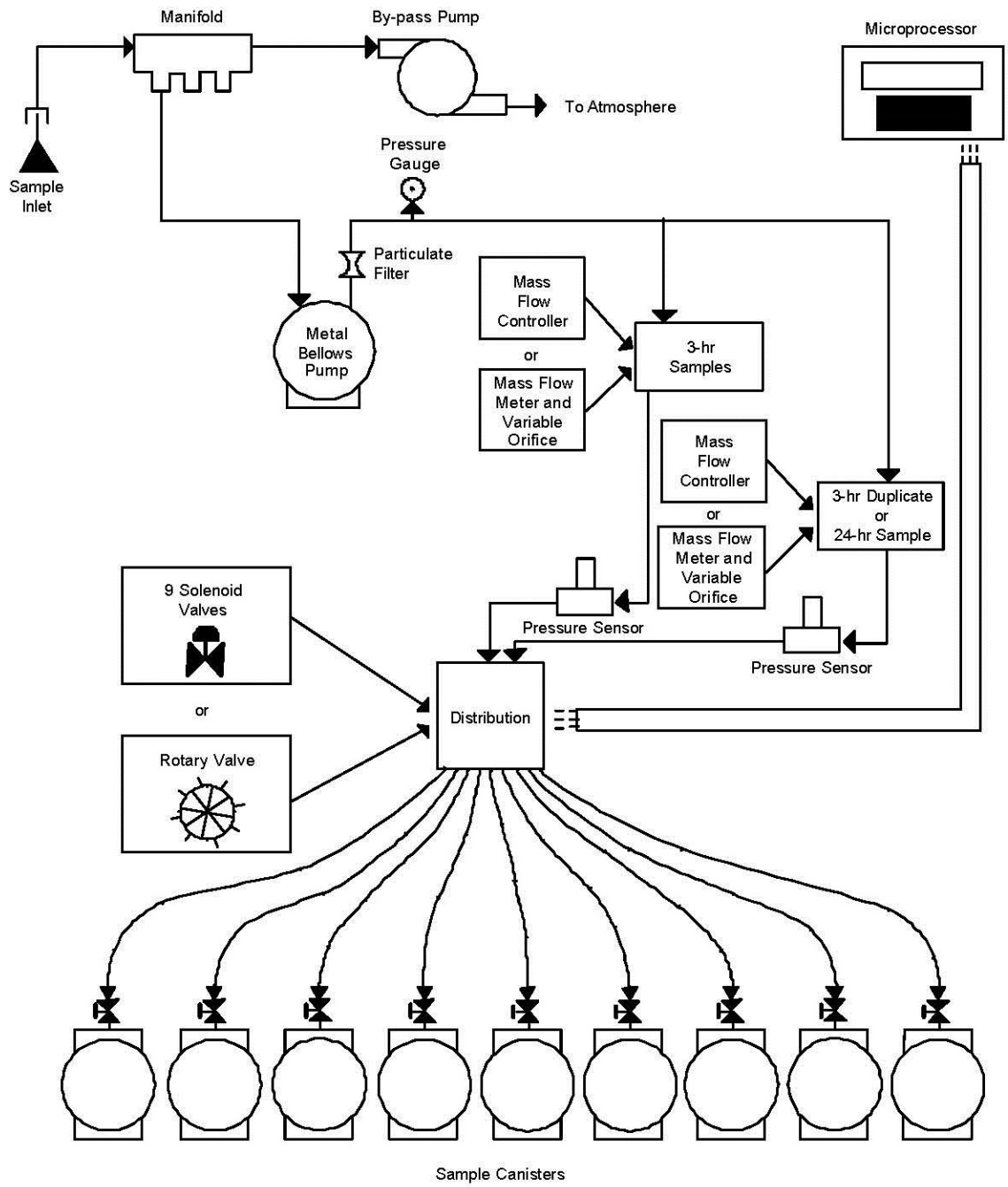


**Figure 7-5. A typical Multi-event Sample Collection System.**

**<u>Inlet probe and manifold assembly</u>** - Constructed of glass (see Figures 7-4) or stainless steel. Used as a conduit to transport sample air from the atmosphere at the required sampling height and distribute it for collection.

**<u>By-pass pump</u>** - A single- or double-headed diaphragm pump, or a caged rotary blower. Used to continuously draw sample air through the inlet probe and manifold assembly at a rate in excess of the sampling system total uptake. All excess sample air is exhausted back to the atmosphere.

**Sample pump** - A stainless steel bellows pump, capable of 2 atmospheres above ambient output pressure. Used to extract sample air from the manifold assembly and deliver it to the sample canister during collection.
**Sample inlet line** - Chromatographic-grade stainless steel tubing. Used to connect the sampler to the manifold assembly.
**Sample canisters** - SUMMA® passivated stainless steel sample vessels of desired internal volume with a bellows valve attached at the inlet of each unit. Used to contain the collected sample air for transportation and analysis.
**Electronic pressure sensor** - A pressure measurement device capable of measuring vacuum (0-30 in Hg) and pressure (0-30 pounds per square-inch gauge). Used to measure initial and final sample canister pressures.
**Adjustable orifice and mass flow meter assembly or electronic mass flow controller** - An indicating flow control device(s). Used to maintain a constant flow-rate (± 10%) over a specific sampling period under conditions of changing temperature (20-40$^{o}$C) and humidity (0-100% relative).
**Particulate filter** - Two micron sintered stainless steel in-line filter. Used to remove particulate material larger than 2 microns from the sample air being collected.
**Microprocessor** - An event control and data acquisition device. Used to allow unattended operation (i.e., activation and deactivation of each sampling event) of the sampling system and to record sampling event specific process data (i.e., start and end times, elapsed times, initial and final sample pressures, etc.).
**Solenoid valves or a multi-port rotary valve** - Eight electric-pulse-operated or low temperature coil, stainless steel body solenoid valves with Viton® plunger seat and o-rings or one multi-port stainless steel body rotary valve with Viton® o-rings. Used to provide access to or isolation of the sample canister(s).
**Stainless steel tubing and fittings** - Isolation and interconnection hardware. Used to complete system interconnections. All tubing in contact with the sample prior to analysis should be chromatographic grade stainless steel and all fittings should be 316 grade stainless steel.

**Multiple-event Sample Collection Procedure**

Samples are collected in individual canisters using a single pump and one or more flow control devices. A stainless steel metal bellows style pump draws in ambient air from the sampling probe and manifold assembly at a constant flow rate to fill and pressurize each sample canister during each specific sampling event.

A flow control device(s) is used to maintain a constant sample flow rate into each canister over each specific sampling period. The flow rate used is a function of the final desired sample pressure, the internal volume of the canister used, and the specified sampling period and assumes that the canisters start at a pressure of 5 mm Mercury (Hg) absolute. The flow rate is calculated as follows:

(Eq. 7-5)
$$F = \frac{P \times V}{T \times 60}$$

Where:

| | | |
|---|---|---|
| F | = | flow rate (mL/min) |
| P | = | final canister pressure, atmospheres on a absolute basis |
| V | = | volume of the canister (mL) at one atmosphere |
| T | = | sample period (hours) |
| 60 | = | minutes in an hour |

For example, if 6-L canisters are to be filled to 1.5 atmospheres absolute pressure each over individual 3-hour integration period (i.e., collection episode), the flow rate specific to each period is calculated as follows:

(Eq. 7-6)

$$F = \frac{1.5 \text{ atm} \times 6000 \text{ mL/atm}}{3 \text{ hr} \times 60 \text{ min/hr}} = 50 \text{ mL/min}$$

During operation, the microprocessor control device is programmed to activate and deactivate the components of the sample collection system, consistent with the beginning and end of each individual sample collection period.

Prior to any field use, each sample collection system should be certified as nonbiasing, meaning that the sample collection system does not add to or subtract from the concentrations of the samples collected using it (refer to Section above pertaining to canister sampling system certification). The canisters should also be determined to be clean before each use (refer to Section below pertaining to canister cleaning). Each adjustable orifice and mass flow meter assembly, or mass flow controller, used as a flow control device should be calibrated against a primary flow measurement standard (i.e., a bubble flow meter, etc.). Pressure sensors should be calibrated against a primary pressure measurement standard (i.e., manometer or absolute pressure gauge. A calibration check should then be conducted periodically according to a program specific QA/QC schedule as developed by the user. The calibration check should consist of performing a single point comparison at a representative setting (e.g., a flow rate typically used for sample collection). The recommended frequency for performing calibration checks is biannually (two calibration checks per year).

**Single-event Sample Collection Equipment**

A typical single-event sample collection system configuration is presented in Figure 7-6.

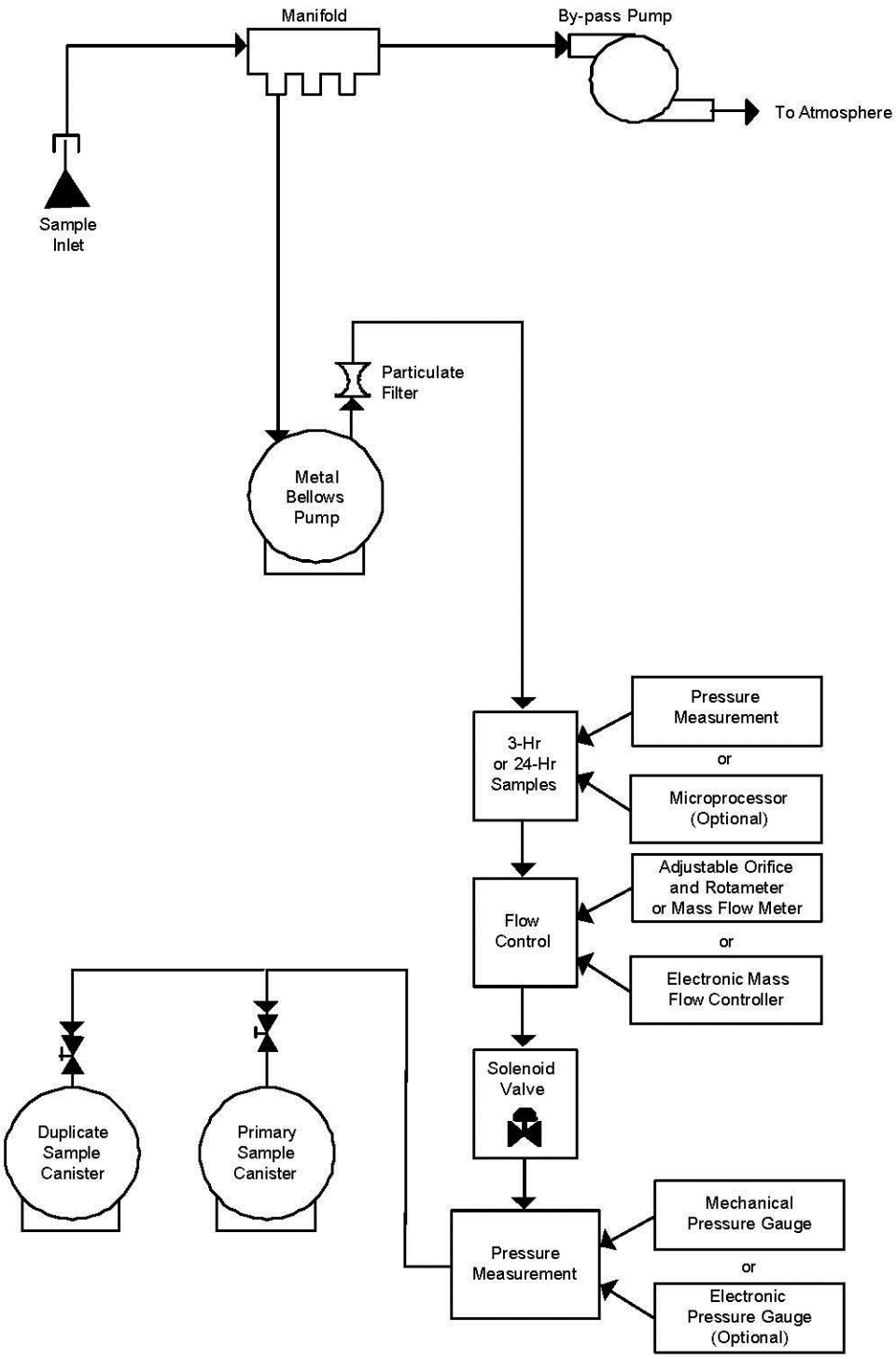


**Figure 7-6. A typical Single-event Sample Collection System.**

The single-event sample collection system consists of identical components to those for the multi-event sample collection system, except for the following:

**Stainless steel vacuum/pressure gauge or electronic pressure sensor (optional)** - A pressure measurement device capable of measuring vacuum (0-30 in Hg) and pressure (0-30 pounds per square-inch gauge). Used to measure initial & final sample canister pressures.

**Adjustable orifice and rotameter, or mass flow meter assembly, or electronic mass flow controller** - An indicating flow control device (or devices). Used to maintain a constant flow rate (± 10%) over a specific sampling period under conditions of changing temperature (20-40$^{o}$C) and humidity (0-100% relative).

**Electronic timer or microprocessor (optional)** - An event control device. Used to allow unattended operation (activation and deactivation) of the collection system.

**Solenoid valve -** An electric-pulse-operated or low temperature coil, stainless steel body, solenoid valve, with Viton® plunger seat and o-ring. Used to provide access to or isolation of the sample canister(s).

**Elapsed time indicator** - A time measurement device used to measure the duration of the sampling episode.

**Single-event Sample Collection Proced**ure

The sample is collected in a canister using a pump and flow control device. A stainless steel metal bellows style pump draws in ambient air from the sampling probe and manifold assembly at a constant flow rate to fill and pressurize the sample canister.

A flow control device is used to maintain a constant sample flow rate into the canister over a specific sampling period. The flow rate used is a function of the final desired sample pressure, the internal volume of the canister used, and the specified sampling period. A starting pressure of 5 mm mercury (Hg) absolute for the canisters is assumed. The flow rate is calculated using the identical formula provided for multi-event sampling, above.

During operation, the timer is programmed to activate and deactivate the sample collection system at specified times, consistent with the beginning and end of a sample collection period.

Single-event sample collection systems can collect sample from a shared sample probe and manifold assembly or from a dedicated stainless steel sample probe, manifold assembly, and by-pass pump. If a dedicated probe, manifold assembly, and by-pass pump are used, a second electronic timer should be incorporated to start the by-pass pump several hours prior to the sampling period to flush and condition the components. The connecting lines between the sample inlet line and the canister should be as short as possible to minimize internal surface area and system residence time.

The flow rate into the canister should remain constant over the entire sampling period. If an adjustable orifice is used as the flow control device, a drop in the flow rate will occur near the end of the sample collection period because the orifice size is no longer critical as pressure in the canister increases. Typically this condition occurs when canister

pressure exceeds one-half atmosphere above ambient pressure. Consequently, care must be used to select a sample flow rate that will yield final pressure that will not significantly exceed 22-24 psig (i.e., ~8-10 psig) at the end of the sample collection interval.

Prior to field use, each sample collection system should be certified as non-biasing, meaning that the sample collection system does not add to or subtract from the concentrations of the samples collected using it (refer to the Section above pertaining to canister sampling system certification). The canisters should also be determined to be clean before each use (refer to the Section below pertaining to canister cleaning).

## Canister Cleaning

The canister cleaning procedure and equipment described in this section are recommended when obtaining integrated whole ambient air samples for subsequent analysis of VOCs. The cleaning procedure involves purging the canisters with cleaned humidified air and then subjecting them to high vacuum.

The purpose of canister cleaning is to ensure that the canister interior surfaces are free of contaminants and that the canister meets a predetermined cleanliness criterion (i.e., #10 ppbC NMOC). This level of cleanliness minimizes the potential for carryover of organic pollutants from one sample to the next, and helps ensure that the samples collected are representative.

The equipment required to clean canisters includes a source of clean, humidified air to pressurize the canisters to a pressure of 20 psig, and a vacuum system for evacuating the canisters to 5 mm Hg absolute pressure. Air from a standard oil-less air compressor will contain pollutants from the ambient air. In addition, various VOCs will be found in the compressed air because of the lubricants used in the air compressor. Hydrocarbon-free air may be purchased in cylinders and humidified before being used in the cleaning process. However, this approach may be cost-prohibitive. Figure 7-7 presents the schematic of a canister cleanup system that is suitable for cleaning up to 16 canisters concurrently. This, and any alternative system, must include a vacuum pump capable of evacuating the canisters to an absolute pressure of 5 mm Hg. The equipment is designed so that one manifold of eight canisters is undergoing the pressurization portion of the cleaning cycle while the other manifold of eight canisters is undergoing the vacuum portion of the cleaning cycle.

The following equipment is incorporated in a canister cleaning system.

**Air compressor** - A shop or laboratory oil-less air compressor used to provide the air supply for the canister cleanup apparatus.
**Coalescing filter** - A coalescing filter designed to remove condensed moisture or hydrocarbon contaminants present in the air supplied from the air compressor.
**Permeation driers** - Permeation driers used to dry the air prior to introduction into the catalytic oxidizers. Two permeation driers are installed in parallel.

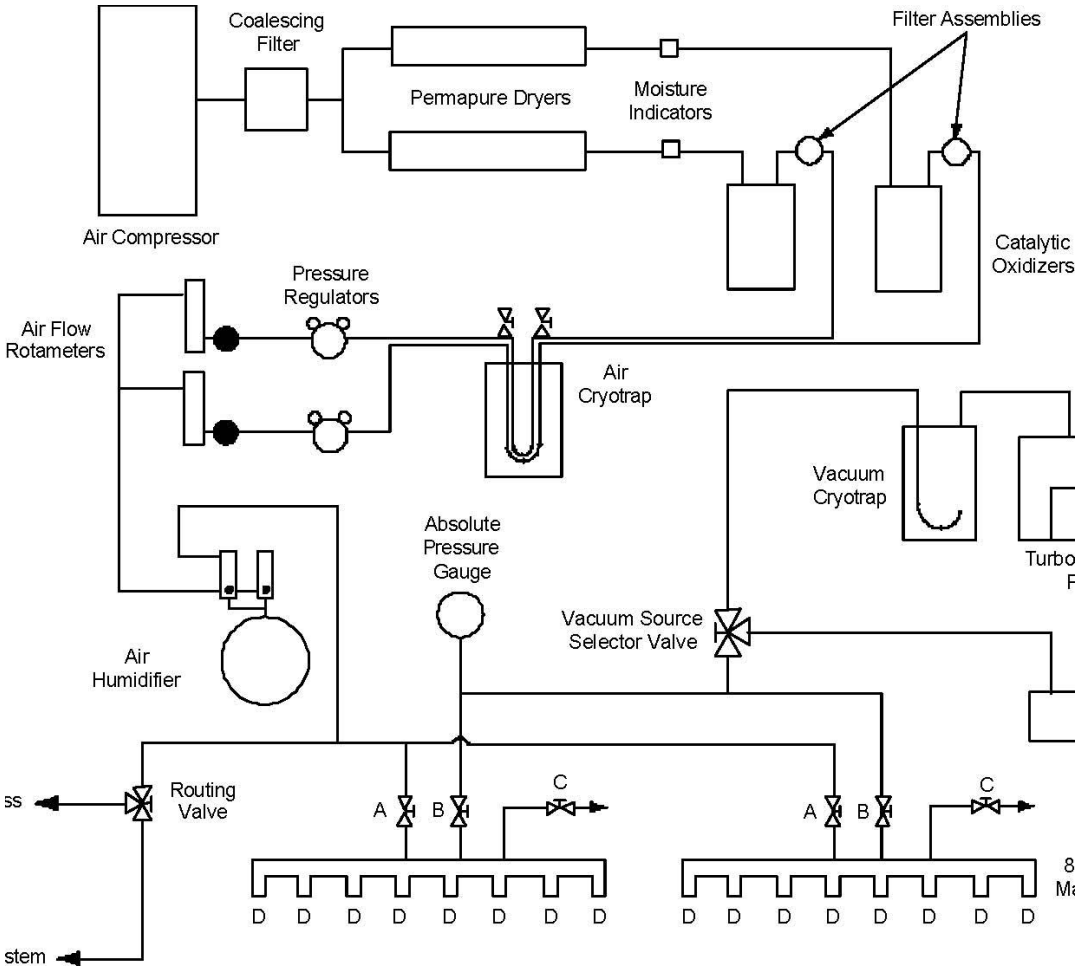


**Figure 7-7. Schematic of a Canister Cleanup System.**

**<u>Filter assemblies</u>** - A 5-micron sintered stainless steel filter installed in the filter housing assembly downstream of each catalytic oxidizer to trap any particulate material that may be present in the air stream leaving the catalyst bed of the oxidizer.

**<u>Air cryotrap and purge valves</u>** - The air cryotrap allows the cleaned air supply lines to be subjected to cryogenic temperatures to condense (1) water formed during the oxidation of hydrocarbons, (2) any remaining unoxidized hydrocarbons, and (3) other condensables. Air cryotrap purge valves are used to purge these condensed components from the air cryotrap, as described in the operating procedure described below.

**<u>Pressure regulators</u>** - A high purity dual stage pressure regulator installed in each branch of the air supply line so that the maximum pressure attained during the cleanup procedure is controlled at 20 psig.

**<u>Flow controllers</u>** - The flow control devices shown in the canister cleanup schematic (Figure 2-10) are metering valves. The flow rates are set not to exceed the maximum recommended flow rate through the catalytic oxidizers.

**<u>Air flow rotameters</u>** - Rotameters installed in the air supply lines to allow monitoring of the flow rates through the catalytic oxidizers.

**Air humidifier** - The air humidifier shown in Figure 7-7 is a SUMMA®-passivated, double-valve stainless steel canister with an inlet dip tube that projects to the bottom of the sphere. HPLC-grade water is placed in the canister prior to use. Two rotameters are connected to control air flow so that about 80% of the flow rate can be directed to the humidifier (to bubble through the water to become saturated), while the other 20% bypasses the humidifier. This procedure allows the humidification apparatus to supply cleaned, dried air that has been humidified to a relative humidity of ~80%.

**Manifold air pressure valves** - Manifold air pressure valves used to isolate the air supply system from the manifold, or to make the pressurized air available to the manifold.

**Eight-port manifolds** - Eight-port manifolds designed to allow up to eight canisters at a time to be connected. Fewer canisters may be connected to the manifold if the vacant ports are sealed off with a plug fitting.

**Roughing pump** - The roughing pump shown in Figure 7-7 is a high-capacity diaphragm vacuum pump used to remove the moist cleaning air from the canisters while evacuating the canisters to about 100 mm Hg absolute. The high moisture content of the cleaning air contained in the canisters will not impede the function of this diaphragm style pump, but will impede the performance of the high-vacuum pump.

**High-vacuum pump** - A high-vacuum pump capable of reducing the pressure in the canisters to 5 mm Hg absolute. High moisture content will impede the performance of the high-vacuum pump.

**Vacuum cryotrap** - A U-shaped trap located in the vacuum manifold that is sized to fit inside a Dewar flask filled with cryogen. The purpose of this trap is to condense water vapor from the air that is pulled from the canisters during the vacuum cycle and prevent back-diffusion of organic vapors from the high-vacuum pump into the canisters during the vacuum cycle of the cleaning procedure.

**Vacuum source selector valve** - The vacuum source selector valve is a multi-position valve used to route either the roughing pump or the high vacuum pump to the eight-port manifold assemblies or isolate both pumps from the manifold assemblies.

**Compound absolute pressure gauge** - An absolute pressure gauge used to measure the pressure attained in the canisters during the vacuum and pressurization cycles of the cleaning procedure. The absolute pressure gauge must be able to measure absolute pressures from 40 psig down to 0.5 mm Hg absolute.

**Air bypass valve** - The air bypass valve is used to allow for a 1.0 L/min flow of air to be maintained through the catalytic oxidizers when the cleaning system is not in use. This flow prevents the oxidizers from overheating when the clean up system is not in use.

**Manifold valves** - The manifold vacuum valve and the manifold pressure valve are used to apply vacuum or pressure to the canisters, as required during the cleaning procedure.

**Manifold ports** - The manifold ports permit connection of the canisters to the manifold. Fittings that mate directly with the canister valve fittings are used. These connections will not leak during the pressurization portion or the vacuum portion of the cleaning procedure.

Prior to initial use, the cleanliness of all canisters should be assessed. After the initial blanking of 100% of the canisters, the blanking frequency can be reduced. One canister on a cleaning bank of eight canisters is considered representative and should be blanked.

The blank sample is analyzed using the PDFID technique as described in the EPA Compendium Method TO-12. If this measurement meets the predetermined cleanliness criterion (i.e., 10 ppbC) then the other canisters on the manifold are considered clean. Blanking is a part of the overall canister cleanup procedure

After cleaning and blanking, the canisters are ready for final evacuation in preparation for sample collection. The procedure for final evacuation is described below.

1. Release the pressure from the canisters by opening the manifold pressure release valve and opening all of the canister bellows valves. When venting is complete, close the manifold pressure release valve.
2. Begin final evacuation of the canisters by actuating the roughing pump, placing the vacuum source selector valve in the roughing pump position and opening the manifold vacuum valve.
3. Evacuate the canisters to approximately 100 mm Hg, as indicated by the absolute pressure gauge.
4. Activate the turbomolecular vacuum pump, checking to be sure there is liquid cryogen in the vacuum cryotrap.
5. Switch the vacuum source selector valve to the high-vacuum pump position. Allow the canisters to evacuate to 5 mm Hg, as indicated by the absolute pressure gauge.
6. Close the canister bellows valves on all of the canisters on the manifold. Close the manifold vacuum valve.
7. Disconnect the canisters from the manifold and remove any old identification tags. Store the cleaned canisters in the designated storage area.

## Canister Sampling Issues

The use of canister sampling for collecting and consequently determining concentrations of VOCs in ambient air is an integral part of the sampling strategy and recommended monitoring requirements specified in the proposed revisions to 40 CFR Part 58. The technology utilizes stainless steel canisters with interior surfaces conditioned to minimize surface reactivity. Conditioning allows stable storage for many of the compounds of interest. Currently, there are two processes used to condition canister interior surfaces.

They are the SUMMA® process and the Silcosteel® process. The SUMMA® process is a proprietary electroplating treatment that passivates the internal steel surface of the canister. The Silcosteel® process treats the internal surface by coating it with a thin layer of fused silica. SUMMA® canisters have been used extensively for the collection of VOC samples since 1983, and their use is well characterized. Silcosteel® canisters have been used since 1996 and although their use is not as well characterized, early evaluation suggests the Silcosteel® canisters are suitable for use in ambient air sampling. Conditioned stainless steel canisters in a variety of volumetric sizes are commercially available from several manufacturers.

An important advantage of the canister based methodology is that the collected whole air sample can be divided into portions for replicate analyses (permitting convenient assessment of analytical precision) and re-analyses using different analytical systems for specific peak identification and confirmation.

The presence of high levels of particulate matter can also pose problems in sampling VOCs. If a filter is used to collect particulate matter, ozone can interact with the particulate material trapped on the filter, resulting in the generation of artifacts. Also, use of a filter such as a 2 μ Teflon® filter on the inlet to the manifold or on the inlet to the monitoring system means that the filter must be changed frequently (i.e., daily). However, if the monitoring station is near a source of particulate matter (such as industrial emissions), it may be necessary to use a filter and accept the necessity of more frequent visits to the monitoring site to change the filter.

**Precautions in the Use of Canisters**

Primary problem areas associated with canister sampling include contamination and sample stability. If not controlled, these problems can significantly reduce the quality and usefulness of the data obtained using the canister sampling technique. The general discussion and guidance presented below are intended to provide users with information that should minimize these problems.

**Contamination**

Contamination may cause additional compounds to appear in the sample or increase the concentrations of compounds present in the ambient air. Contamination may also cause loss of sampled compounds or may introduce compounds that interfere with gas chromatographic sample analysis. Contamination can originate from the sample canisters, canister cleanup systems, components in the sampling systems or analytical system, and improper canister storage practices. These problems become more significant as analytical sensitivities (detection limits) are lowered.

To minimize collection system contamination, canisters should be purchased from a reputable supplier who uses high-quality manufacturing and final cleaning procedures. Purchase requirements should specify contamination-free valves and criteria for maximum residual concentrations of target compounds. New canisters should be inspected carefully for proper welding and fittings and should always be blank checked (filled with humidified zero air and analyzed) before use to check for contamination. Canisters with excessive contamination should be returned to the supplier or cleaned repeatedly until acceptable. Some contaminated canisters may appear uncontaminated immediately after cleaning but will outgas contaminants upon storage for several weeks. All canisters in routine use should be blank checked frequently, and particularly after extended periods of storage, to ensure that significant contamination does not appear.

Canisters used for ambient or low-level measurements should be segregated from those used for higher-level concentrations or for higher-molecular-weight compounds. Higher-

molecular-weight compounds are more difficult to remove from the internal canister surface.

Canister cleanup systems should be constructed of clean, high-quality stainless steel components, contain suitable cryogenic traps, and be operated systematically and meticulously to avoid system contamination from vacuum pump oil, poor quality zero air, water used in humidification systems, room air, or other sources.

Sampling and analytical systems should be constructed of clean, high quality components, with particular attention paid to pumps, valves, flow controllers, or components having any non-metallic surface. These systems should be certified before installation based on a canister sampling system certification protocol as described in detail in the Technical Assistance Document for Sampling and Analysis of Ozone Precursors (EPA/600-R-98/161).

Equipment found to be contaminated should be tested further to attempt to identify the source of the contamination. Contaminated components should be replaced or cleaned, and the system recertified. Minor contamination can often be reduced by purging the system extensively with humidified zero air.

## Sample Stability

Sample stability refers to the representativeness of the ambient air sample contained in a canister after sample collection and storage. For the sample to be stable, the compound matrix and concentrations of the sample must not change significantly with time. Some of the ways that the concentration of target compounds in an ambient air sample may change after sampling are:

- Adsorption or desorption on the interior surfaces of the canister or on particulate matter in the sample from the ambient air;
- Chemical reaction;
- Dilution of the sample with another gas after sampling; and
- Stratification of the sample in the canister.

A number of studies have shown that a wide range of VOCs are stable in canisters for at least 30 days. Most of the reported studies were performed in SUMMA® treated stainless steel canisters at pressures above atmospheric pressure. SUMMA® passivation of the interior surfaces of the canisters is designed to passivate the surfaces to minimize catalytic activity on the surface and to reduce the number and activity of adsorptive sites on the canister's interior walls.

While many compounds have been shown to be stable in canisters, it is not known how these results extend to the variety of conditions that may be encountered during the use of canisters for PAMS. These conditions include variable quality of the canisters and their passivation process, variable moisture content or humidity in the sample air, previous

history of use or residual contamination of the canister, sample pressure in the canister above or below atmospheric pressure, storage temperatures, and canister age.

Other considerations include vapor pressure of the VOC (vapor pressures above 0.5 mm Hg at 25$^{o}$C store well in canisters as do halogenated hydrocarbons with similar vapor pressure properties), the canister type (aluminum or stainless steel), and presence of water (enhances the stability of polar organic compounds in stainless steel canisters).

Target analytes for which there is little stability information or for which storage stability characterization is questionable should be specifically tested for storage stability in the canisters. These tests should be performed under typical conditions of use.

There is a potential for physical adsorption as a mechanism for loss of VOCs from the vapor phase in canisters. Since all species present in the canister participate in the competitive adsorption process, consideration of the quality of data obtained from multiple canisters at the same site should include at least semi-quantitative specification (such as total FID response) of non-target species present in the samples.

### Positive Pressure Samples

Samples obtained so that the final sample pressure is above atmospheric pressure (typically 5 to 20 psig) are considered positive pressure samples. Positive pressure samples are the least likely to be affected by the attainment of adsorption equilibrium in the canister after sampling. The only precaution recommended in this regard is that after sampling, no sample be withdrawn until the sample has been in the canister for at least 24 hours to allow the adsorption equilibria to stabilize.

### Diluted Samples

Samples may be diluted by adding pressurized, clean air, $N_2$, or other gaseous diluent. It is recommended that at least 24 hours elapse between dilution of a sample and removal of an aliquot for analysis.

### Canister Leakage

There are three potential sources of canister leakage. These sources are:

1. Faulty canister welds;
2. Leakage at the connection of the valve to the canister; and
3. Leakage through the valve.

A faulty weld is a manufacturing defect. Faulty welds are fairly rare and can be detected by conducting leakage acceptance tests. Canisters may also sustain physical damage. Damaged canisters should be repaired and retested for leaks.

Leaks at the connection of the valve to the canister are the most troublesome type of leak. Welding the valve to the canister virtually eliminates such leaks but makes subsequent valve replacement impractical and expensive. Usually, the valve is connected to the canister using a standard tubing compression fitting. Properly installed, these fittings are very reliable. However, these fittings can loosen when an operator improperly opens and closes the valve. If the valve rotates with respect to the canister during opening and closing, small leaks in this fitting can occur. Over-tightening the fitting in an attempt to prevent such movement exacerbates the problem, as does any other physical strain on the connection. Short of welding the valve to the canister, vulnerability to leakage in this connection can be greatly reduced by:

- Using an oversize fitting (e.g., 5/16-inch or 3/8-inch rather than 1/4-inch);
- Equipping the canister with a valve guard to protect the valve from physical strain; and
- Mechanically clamping or fastening the valve to the canister or valve guard to prevent rotation during opening or closing.

These measures are offered by some canister manufacturers and should be specified. Even with these precautions, periodic retesting of canisters is necessary to ensure that no significant leaks in the valve connection develop with extended use.

Leaks through the valve can occur if the valve seat has become damaged through wear or over-tightening. The practice of installing a cap on the valve connection when the canister is not connected to a sampling system effectively minimizes sample or vacuum loss during periods of storage.

A canister may quickly be tested for obvious leaks by pressurizing it with zero air and submerging it in clean water to look for bubbles. To check for microleaks, the canister should be evacuated and its pressure observed for several days with a sensitive absolute pressure gauge connected.

Canisters with excessive leaks must be repaired and repassivated or replaced, but those with relatively minor microleaks can be used for many applications if precautions are taken. Canisters determined to have microleaks can be prepared for use just prior to sample collection and analyzed promptly after sample collection. Reduction of the pre- and post-sampling time reduces the potential for bias.

## Sample Analysis

The analysis that follows the collection of whole air samples into SUMMA® canisters is identical to the procedures discussed in the Automated Sampling section. The only minor difference is that the canisters are sent to a central laboratory location for sample analysis as opposed to being analyzed on site.

If a manual sample analysis system is used, it should incorporate the same basic components as discussed in the automated method which include a sample introduction

system, sample conditioning system (for moisture removal), sample concentration system for sample enrichment, an optional cryo-focusing trap, a gas chromatograph which houses the appropriate analytical column(s) and FID(s), and a data acquisition and processing system. Capillary GC/FID is the recommended analytical system for PAMS but individual sites may use GC/MS or a gas chromatograph with multiple detectors (i.e., both FID and MS).

## Quality Control and Quality Assurance for VOC Measurements

The quality of the data submitted to the AIRS data base must be consistent across all agencies. Because a significant investment of time and assets is expended to generate measurement data, a quality control/quality assurance (QC/QA) program should be developed to ensure that the data collection is consistent and that data quality objectives (DQOs) for the measurement program are met. The quality program for VOC measurements, similar to programs for other air monitoring efforts, incorporates quality control and quality assurance. These two systems work together to achieve the goal of continuing quality in measurement efforts.

A description of the elements necessary for a PAMS QA program are found in 40 CFR Part 58, Appendix A "Quality Assurance Requirements for State and Local Air Monitoring Stations (SLAMS)."

General QC guidance can be found in the EPA QA Handbook. Quality control for measurement programs covers topics from preventive maintenance to corrective actions. Four areas of particular importance to VOC measurements described in this section are sample collection, sample handling and custody, sample analysis, and data documentation and archiving.

### Sample Collection

Quality Control for sample collection should address: certification of the sample collection system, calibration of the system components, field acquisition of duplicate samples, and preventive maintenance efforts. A table of QC objectives for sample collection is given in Table 7-4. Technical information pertaining to manual multiple-event and single-event VOC sample collection systems automated GC systems are presented in previous Sections of this chapter.

**Table 7-4. QC Objectives for VOC Sample Collection.**

| Assessment | QC Procedure | Frequency | Acceptance Criteria | Corrective Action |
|---|---|---|---|---|
| Sampling System Carry-over | Challenge with target compounds | Annual | 80-120% recovery for target compounds, overall compound recovery of 85-115% | 1. Additional system purge with humid zero air<br>2. Repeat challenge |

| Assessment | QC Procedure | Frequency | Acceptance Criteria | Corrective Action |
|---|---|---|---|---|
| Sampling System Background or Contamination | Humid zero air blank | Annual | 2 ppbC or the MDL, whichever is less for target species or # 10 ppbC TNMOC | Additional system purge with humid zero air Repeat zero air collection |
| Accuracy of Collection Period | Elapsed time meter or timing device check On/off timer check | 6 Months Quarterly | Gain or loss in time # 2 minutes per 24-hour period | Adjust or replace the timing device Adjust or replace timer |
| Sampling Integration Period | Flow control check | Weekly | Measured transfer standard flow within 10% of indicated flow | Adjust or replace flow control device |
| Sampling System Pressure/Vacuum Measuring Device Accuracy | Pressure/vacuum gauge or electronic sensor check | Annual | # 10% difference between field and lab measured canister pressure | 1. Adjust for diff. in pressure/vacuum measurement technology<br>2. Repeat check |
| Duplicate Sample Correction Precision | Comparison of duplicate canister sample results | 10% of field samples | Agreement within ±25% RPD. | 1. Perform sampling system PM<br>2. Repeat duplicate sample collection<br>3. Check analytical system precision<br>4. Check canisters for leaks. |

## Preventive Maintenance

Preventive maintenance is an important part of the overall QC program for both manual and automated sample collection systems. Maintenance items are generally specified by each sample collection system manufacturer in the operating manual. These items may include any moving parts such as valves or pumps. Most manual sample collection systems have an in-line particulate filter which needs to be replaced on a regular basis. The location and physical conditions of the sample collection system may dictate other maintenance activities that are necessary to reduce the effects of heat, dust, corrosion or other concerns.

Any maintenance activity that involves the disassembly of hardware and replacement of parts should be viewed as a potential change to the performance of the system. Replacement of major sample collection system components (e.g., a flow control device) may warrant recertification of the sample collection system. Duplicate analysis of multiple component calibration standard samples can be used to assess whether changing a major component has affected the performance of the collection system. If the duplicate analysis results compare within the quality objectives for the program, the sample collection system does not require recertification. If duplicates do not meet the quality objectives, then the sample collection system should undergo full challenge and blank recertification. Repeated analyses of a multiple component calibration standard for the automated GC should also be conducted and reviewed to check for shifts in retention time or changes in response factors that may be caused by a maintenance activity.

Quality Control activities should be thoroughly documented in a log book dedicated to the monitoring site. In addition to the technical details of the site maintenance activity, the time, date, sample collection system or instrument ID, and monitoring site ID should be recorded.

**Sample Handling and Custody**

The QC procedures for canister preparation are vital to manual sample collection and calibration standard preparation because all of these activities rely on leak-free uncontaminated canisters. All canisters should be cleaned and checked for contamination and certified clean to 10 ppbC TNMOC.

Sample documentation includes chain-of-custody for canister samples and proper sample identification and labeling. A chain-of-custody protocol should be developed so that at any point between the canister's initial cleaning and its disposition after analysis the sample custodian can identify and track the status of the canister. A unique identification is required for each canister at each point in the sampling event. This record allows the history of each sample to be reconstructed if a problem arises with the analytical results.

A communication protocol should be established between the field sampling personnel and the analytical laboratory personnel to ensure that sample canisters arrive at the monitoring locations ahead of the scheduled sampling date. Sufficient numbers of canisters should be available to collect all required samples, including any blank or duplicate samples that may be scheduled. The communication protocol should include how to return the sample canister to the laboratory after collection.

For automated GCs, sample documentation can be accomplished using instrument specific data collection software. Each chromatogram should have a header that uniquely identifies the sample (e.g., filename and sample ID) as well as notation of the analysis conditions and column(s) used. Good maintenance records are very important for automated GCs due to the large volume of data produced. An injection or sample collection logbook should be maintained to provide a history for each analysis so that any questions about results can be resolved.

A standardized approach should be followed for identifying samples, blanks, calibration runs, audits, and other analyses. All samples collected and analyzed with an automated GC should have a unique file name designated to identify the site, instrument used to collect the sample, and the sampling date and time. A data system should automatically append a character(s) to the end of the electronic storage file which corresponds to the order in which the sample was analyzed. The user is typically limited to eight characters.

**Sample Analysis**

Several steps are taken to ensure that the analytical system is in control, and these steps apply to GC operations whether the sample is collected using an automated or a manual

method. A summary of these quality objectives is shown in Table 7-5. These objectives are the minimum QC procedures pertaining to VOC analyses. States are strongly encouraged to develop more detailed, site-specific SOPs.

During the initial analytical system set-up a multiple point calibration check using propane and/or benzene is performed, and retention time windows are determined using the retention time standard for each target compound. Calibration is the single most important operation in the measurement process. Calibration is the process of establishing the relationship between the output of a measurement process and a known input. For routine operation, the retention time calibration check samples are analyzed to demonstrate that the retention times for each target VOC are within the established window, to monitor the detector response drift, and verify the target compound recoveries.

**Table 7-5. VOC QC Procedures.**

| **Assessment** | **QC Procedure** | **Frequency** | **Acceptance Criteria** | **Corrective Action** |
|---|---|---|---|---|
| System Background and Carry-over | System Blank Analysis, Humidified Zero Air | Weekly, following retention time/calibration check and after multiple-point calibration curve | 20 ppbC total, both analytical columns, or 10 ppbC per column | 1) Repeat analysis<br>2) Check system for leaks<br>3) Clean system with wet air<br>4) Condition sample trap |
| Calibration | Multiple Point Calibration (3 points minimum). Propane/benzene bracketing the expected sample concentration | Prior to analysis at start of season and when system maintenance is performed | Correlation Coefficient = 0.995 | 1) Repeat individual sample analysis<br>2) Repeat linearity check<br>3) Prepare new calibration standards and repeat |
| Quantitative and Qualitative Performance | Retention Time/Calibration check using mid-point of calibration curve | Weekly | RF within 10% RPD of calibration curve average RF<br><br>RT within ± 0.1 minutes of target<br><br>% recovery for targets 80-120% | 1) Repeat check<br>2) Repeat calibration curve |
| Qualitative Performance | Canister cleaning certification | All canisters prior to use | # 10 ppbC total | Reclean canister and reanalyze |
| Detection Limit | 40 CFR 136 Part B | Prior to analysis at start of season | 2 ppbC or better, specific target peaks selected | N/A |
| Precision | Replicate sample analysis, manual or automated | 10% of samples | Within ± 25% RPD for target conc. > 5 times the MDL | Repeat sample analysis |

| Assessment | QC Procedure | Frequency | Acceptance Criteria | Corrective Action |
|---|---|---|---|---|
| Accuracy | Performance evaluation or NPAP sample analysis | Prior to start of season, and monthly during monitoring season. | 20% absolute bias | Repeat sample analysis |

# Determination of Total Nonmethane Organic Compounds Using Method TO-12

Qualitative and quantitative determinations of individual VOCs and measurement of total NMOC using the GC based methodology described previously requires instrumentation that is expensive, complex, and difficult to operate and maintain. Method TO-12 provides a similar measurement of total NMOC, but does not provide information on the individual VOCs comprising the total. Method TO-12 is part of the "Compendium of Methods for the Determination of Toxic Organic Compounds in Ambient Air." Method TO-12 involves a simple preconcentration procedure with subsequent direct flame ionization detection and provides accurate and sensitive measurements of total NMOC concentrations. The instrumentation for this method can be configured for either automated in situ measurements or for analyzing integrated samples collected in canisters.

Although Method TO-12 is not directly applicable to PAMS, the method is included here because:

- Method TO-12 is a viable, practical, and effective method of post clean-up determinations of canister cleanliness;

- Method TO-12 can be used for ambient total NMOC measurements as input into $O_3$ predictive models that do not require speciated VOC information; and

- Used in combination with the manual (canister) methodology or in an automated form, Method TO-12 can be applied (i.e., with the approval of the EPA Administrator) as a viable alternative monitoring approach to the automated methodology described earlier.

Total NMOC data, resulting from measurements made using Method TO-12, should be entered into the AIRS data base. These NMOC data are entered under Parameter Code 43102. The Method Code is 012, which describes the sum of data gathered by preconcentrated direct flame ionization detection (PDFID). PDFID is the TO-12 EPA-approved method which includes not only the sum of $C_2$ through $C_{12}$ data, but also any compounds larger than $C_{12}$ that are detected.

# Methodology for Measuring Oxides of Nitrogen and Total Reactive Oxides of Nitrogen in Ambient Air

Measurement of ambient concentrations of nitric oxide (NO) and nitrogen dioxide ($NO_2$) is a requirement of the 40 CFR Part 58, Subpart E, enhanced $O_3$ network monitoring program. The NO and $NO_2$ measurements are used to better characterize the nature and extent of the $O_3$ problem, track oxides of nitrogen emission inventory reductions, assess air quality trends, and make attainment/nonattainment decisions.

Oxides of nitrogen, defined here as the sum of the concentrations of NO and $NO_2$ at the same point in time, are principal precursors to the formation of $O_3$. The Urban Airshed Model (UAM), another type of mathematical $O_3$ prediction model, requires NO and $NO_2$, total NMOC, and speciated VOC concentrations as inputs.

Information on measuring NO and $NO_2$, including method and equipment descriptions, is presented in Chapter 9 of this manual.

Although not specifically required in 40 CFR Part 58, Subpart E, measurement of total reactive oxides of nitrogen ($NO_y$) is strongly encouraged by the EPA. Measurements of $NO_y$ constitute a valuable adjunct to current NO and $NO_2$ monitoring because the individual species comprising $NO_y$ include not only NO and $NO_2$, but also other organic nitroxyl compounds that have recently been shown to play a significant role in the photochemical $O_3$ formation process.

The nitroxyl compounds in ambient air included in the group of specific compounds referred to as $NO_y$ have not been specifically defined. This group contains all of the nitroxyl compounds that react in the troposphere to any significant extent and, therefore, contribute to the photochemical formation of $O_3$.

Identified $NO_y$ constituents include:

- NO;
- $NO_2$;
- nitrogen trioxide, $N_2O_3$;
- nitrogen pentoxide, $N_2O_5$;
- nitrous acid, $HNO_2$;
- $HNO_3$;
- peroxynitrate;
- PAN;
- other organic nitrates; and,
- other aerosol nitrates.

In typical urban environments the principal $NO_y$ compounds are NO, $NO_2$, PAN, and $HNO_3$. Measurements of $NO_y$ are a valuable metric serving multiple purposes. Speciated measurements of $NO_y$ compounds provide valuable information relevant to

understanding photochemical cycles and evaluating the behavior of chemical mechanisms applied in $O_3$ prediction models. Because $NO_y$ is a conservative determination of all nitrogen emissions releases, excluding losses due to deposited nitrogen, $NO_y$ should be an excellent indicator of NO and $NO_2$ emissions trends. However, speciated $NO_y$ measurements (i.e., analyzing separately for each $NO_y$ compound) on a routine basis are presently impractical because they require that the user know the identity of all the compounds to be measured and that appropriate individual methods can be applied.

One of the more important uses of $NO_y$ data is predicting tropospheric $O_3$ and assessing the importance of NO and $NO_2$ and VOC levels to $O_3$ production and control. Observational based models (OBMs) assess the age of air masses to evaluate control strategies. Generally, air masses that contain predominantly "fresh" NO emissions are more likely to be hydrocarbon-deficient and require VOCs to produce $O_3$. Air masses that contain nitroxyl compounds are aged and are $NO_x$ deficient, requiring $NO_x$ for maximum $O_3$ production. In either case, it is critical to know NO, $NO_2$ and $NO_y$ levels to decide the best regional control strategy for $O_3$.

Since the measurement of individual reactive nitroxyl compounds is technically difficult, time consuming, and expensive, it is currently impractical to require routine monitors of these species at PAMS stations. However, a practical instrument based total $NO_y$ measurement procedure has been developed.

Information on measuring $NO_y$, including measurement principle and procedures and equipment descriptions, is presented in Chapter 9 of this manual.

## Methodology for Determining Carbonyl Compounds in Ambient Air

Determination of ambient concentrations of carbonyl compounds is a requirement of 40 CFR Part 58, Subpart E, enhanced $O_3$ network monitoring programs. Carbonyl compounds have been shown to contribute to the formation of photochemical $O_3$. Formaldehyde, acetaldehyde, and acetone are specifically required target compounds for PAMS; however, other carbonyl compounds may be added to the target list consistent with individual program objectives.

The methodology used to accomplish carbonyl compounds monitoring is EPA Compendium Method TO-11A. Method TO-11A provides sensitive and accurate measurements of carbonyl compounds and involves sample collection and analysis procedures. In this method, a cartridge(s) containing a solid sorbent is used to capture the target compounds. Ozone has been identified as an interferent in the measurement of carbonyl compounds when using Method TO-11A. To eliminate this interference, removal or scrubbing of $O_3$ from the sample air stream is mandatory. Sample analysis is accomplished using high performance liquid chromatography (HPLC) with ultraviolet/visible detection.

Under 40 CFR Part 58, Subpart E, States are required to obtain 3-hour and 24-hour integrated measurements of carbonyl compounds at specified collection frequencies based on individual enhanced $O_3$ monitoring site type requirements. The sample collection frequencies range from one 24-hour sample every sixth day to eight 3-hour samples every day. Specific sample collection frequencies and minimum network monitoring requirements for carbonyl compounds are presented in Table 7-1. The sample collection frequencies necessitate the use of an automated multiple-event sample collection approach similar to the system used for VOC sampling as discussed in the previous section of this chapter.

## Ozone Scrubbers

The EPA has determined through laboratory tests that $O_3$ present in ambient air interferes with the measurement of carbonyl compounds when using Method TO-11A. Ozone can interfere with carbonyl analyses in three ways:

1. The ozone reacts with the 2,4-dinitrophenylhydrazine (DNPH) on the cartridge, making the DNPH unavailable for derivatizing carbonyl compounds;
2. The ozone also degrades the carbonyl derivatives formed on the cartridge during sampling; and
3. If the analytical separation is insufficient, the DNPH degradation products can co-elute with target carbonyl derivatives.

The extent of interference depends on the temporal variations of both the ozone and the carbonyl compounds and the duration of sampling. Carbonyl compound losses have been estimated to be as great as 48% on days when the ambient $O_3$ concentration reaches 120 ppbv. Eliminating this measurement interference problem by removing or scrubbing $O_3$ from the sample air stream prior to collection of the carbonyl compounds is a mandatory facet of carbonyl compounds sample collection for enhanced $O_3$ monitoring programs.

Two types of $O_3$ scrubbers, the Denuder $O_3$ scrubber and the Cartridge $O_3$ scrubber, have been developed. Both the Denuder and Cartridge $O_3$ scrubbers use potassium iodide (KI) as the scrubbing agent. Scrubbing is based on the reaction of $O_3$ with KI, specifically:

(Eq. 7-7) $$O_3 + 2I^- + H_2O \ \tau \ I_2 + O_2 + 2OH^-$$

where:

| | | |
|---|---|---|
| $O_3$ | = | ozone (ambient) |
| $H_2O$ | = | water (ambient) |
| I- | = | the iodide ion from potassium iodide forming molecular iodine ($I_2$) |
| $O_2$ | = | oxygen ($O_2$) |
| $OH^-$ | = | hydroxide ion ($OH^-$) |

Both $O_3$ scrubber designs effectively remove $O_3$ at sample collection flow rates up to 1 L/minute and have sufficient scrubbing capacity to meet the needs of carbonyl compounds measurement for enhanced $O_3$ monitoring programs.

This section presents details of the two types of $O_3$ scrubber equipment and recommended procedures for their use.

## Denuder Ozone Scrubber

The Denuder $O_3$ Scrubber is a copper tube coated internally with a saturated solution of KI. The tube is coiled and housed in a temperature controlled chamber that is heated to, and maintained at, 66$^{o}$C during sample collection. Heating prevents condensation from occurring in the tube during sampling. The scrubber is connected to the inlet of the sample collection system. Sample air is extracted from a sample probe and distribution manifold as it is for VOCs (see Figure 7-10) and pulled through the scrubber by an oil less vacuum pump. Ozone in the sample air is converted (i.e., scrubbed) by the chemical reaction previously described.

The Denuder O Scrubber is reusable. The copper tube should be recoated with a saturated solution of KI after each six months of use. The Denuder $O_3$ Scrubber prepared as described in TO-11A has been found to effectively remove ozone from the air stream for up to100,000 ppb-hours. Thus, the scrubber will last for six months of 24-hour sampling on every sixth day when sampling air with an average ozone concentration of 120 ppbv.

To recoat the denuder, fill the copper tube with a saturated solution of KI in water. Allow the solution to remain in contact with the tube for a few minutes. Then, drain the tube. Dry the tube by blowing a stream of clean air or nitrogen through the tube for about one hour.

Figure 7-8 presents a cross-sectional view of the Denuder $O_3$ Scrubber. The scrubber is comprised of the following components:

**Copper tubing** - A 3 foot length of 1/4-inch O.D. copper tubing, coiled into a spiral approximately 2 inches in diameter. Used as the body of the $O_3$ scrubber.
**Potassium iodide** - The inside surface of the copper coil is coated with a saturated solution of ACS Reagent Grade KI. Used to provide the $O_3$ scrubbing mechanism.
**Cord heater** - A 2 foot long cord heater, rated at approximately 80 watts, wrapped around the outside of the copper coil. Used to provide heat to prevent condensation of water or organic compounds from occurring within the coil.
**Thermocouple** - A Chromel-Alumel (Type K) thermocouple located between the surface of the copper coil and the cord heater. Used to provide accurate temperature measurement for temperature control.
**Temperature controller** - A Type K active temperature controller. Used to maintain the $O_3$ scrubber at 66$^{o}$C as referenced by the Type K thermocouple.
**Fittings** - Bulkhead unions attached to the entrance and exit of the copper coil. Used to allow connection to other components of the sampling system.

**Chassis box** - Conveniently sized aluminum enclosure. Used to contain the fittings, coated copper tube, heater, and thermocouple.

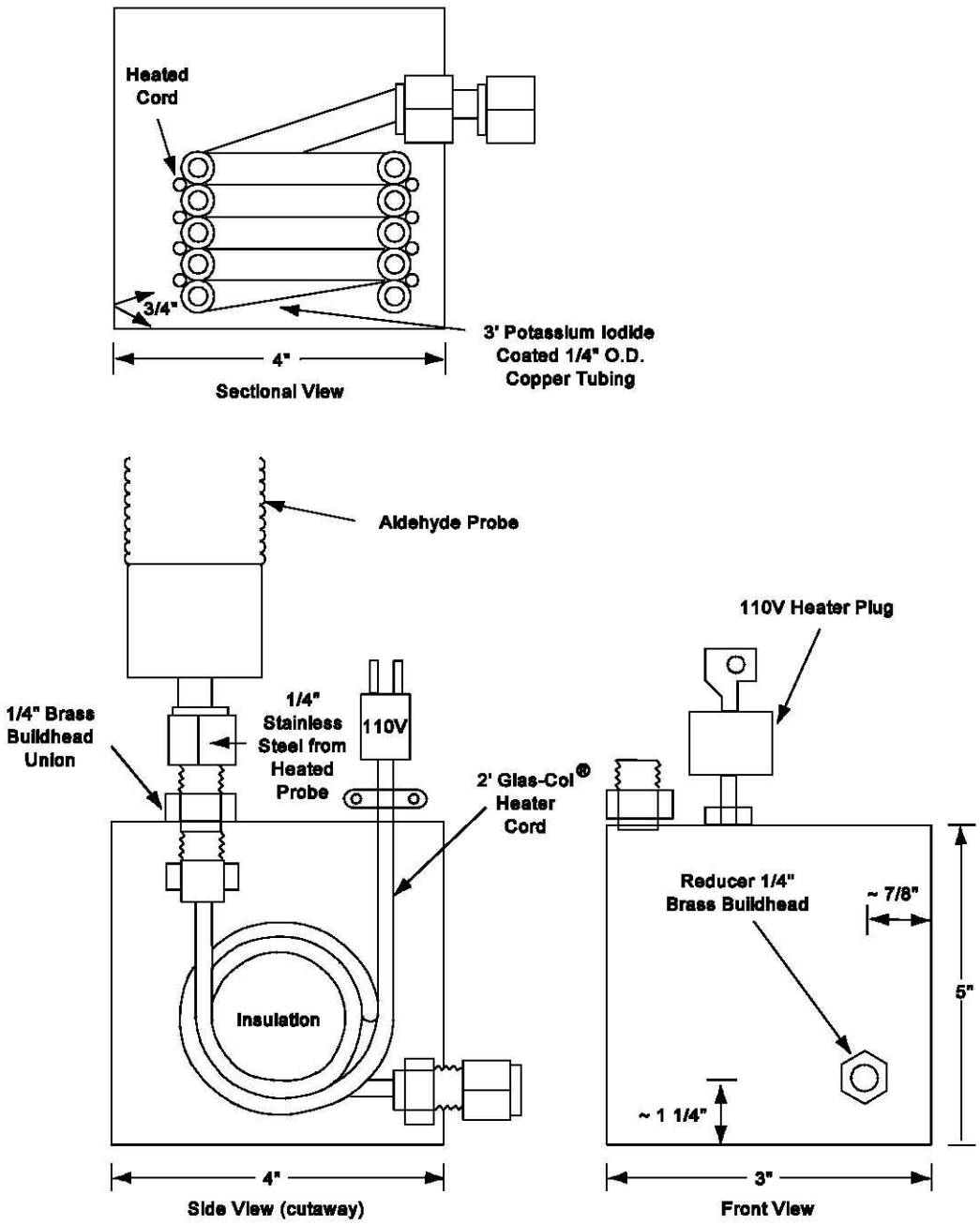


**Figure 7-8. Cross-Sectional View of the Denuder $O_3$ Scrubber**

**Denuder Ozone Scrubber Operational Procedure**

Recommended procedural steps for operation of the Denuder $O_3$ Scrubber are as follows:

1. Connect the inlet of the Denuder $O_3$ scrubber to the sample probe and distribution manifold (see Figure 7-10).
2. Connect the outlet of the Denuder $O_3$ scrubber to the sample collection system inlet.
3. Set the temperature controller to maintain the scrubber at 66ºC.
4. Conduct sampling in accordance with the recommended procedures for operating multiple-event sample collection systems as described in Method TO-11A sampling procedures.

## Cartridge Ozone Scrubber

The Cartridge O Scrubber is a standard Sep-Pak® Plus cartridge (i.e., identical in size and shape to the precoated DNPH Silica Sep-Pak® cartridge) filled with approximately 1 gram of ACS Reagent Grade KI. The scrubber is positioned at the inlet of the sample collection system. Sample air is extracted from the sample probe and distribution manifold (see Figure 7-10) and pulled through the $O_3$ scrubber by an oil less vacuum pump. Ozone in the sample air is converted (i.e., scrubbed) by the chemical reaction previously described. The Cartridge $O_3$ Scrubber is commercially available (i.e., Waters Corporation) and is disposable. The theoretical removal capacity of the scrubber, based on 100% consumption of KI, is 200 mg of $O_3$. Based on experience in the field, the cartridge $O_3$ scrubber should be replaced every three weeks.

Figure 7-9 presents a cross-sectional view of the Cartridge $O_3$ Scrubber. The scrubber is comprised of the following components:

**Cartridge housing** - A two-part plastic vessel with an O.D. of approximately ½ inches and an overall length of approximately 1-5/8 inches. One of the parts has a female Luer style connector that serves as the scrubber inlet. The other part has a male Luer style connector that serves as the scrubber outlet. Used to contain the scrubber media.
**Potassium iodide** - The scrubber medium is granular ACS Reagent Grade KI. Used to provide the ozone scrubbing mechanism.
**Inlet and outlet filters** - Polyethylene fritted filters located inside the cartridge housing at the inlet and outlet ends. Used to retain the scrubber media inside the cartridge housing during sampling.
**Compression ring** - An aluminum ring sized to fit around the outside of the two cartridge housing parts and seal them through compression. Used to provide a secure leak-free seal between the two cartridge housing parts.

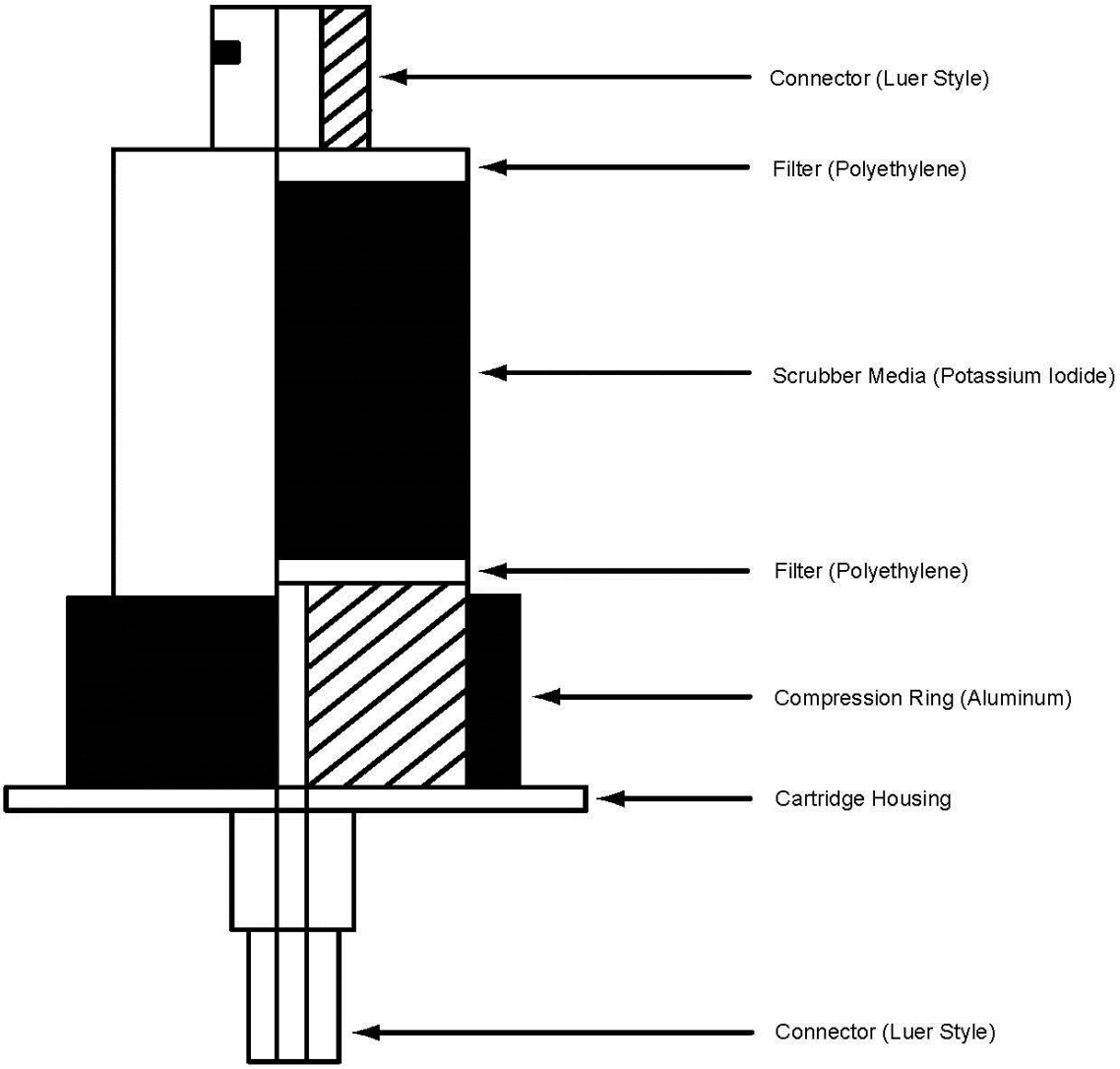


**Figure 7-9. Cross-Section View of the Cartridge O Scrubber**

**Cartridge Ozone Scrubber Operational Procedure**

Recommended procedural steps for operation of the Cartridge $O_3$ Scrubber are as follows:

1. Connect the inlet of the Cartridge $O_3$ scrubber to the sample probe and distribution manifold (see Figure 7-10).
2. Connect the outlet of the Cartridge $O_3$ scrubber to the sample collection system inlet.
3. Ensure that a leak-free connection is obtained.
4. Conduct sampling in accordance with the recommended procedures for operating multiple-event sample collection systems as described in Method TO-11A sampling procedures. **Note: Heating of the cartridge ozone scrubbers to 35$^{o}$C**

**may be advisable under certain circumstances to prevent condensation of water.**

## Multiple-event Sample Collection Systems

The use of solid sorbent cartridge sample collection systems to satisfy the sample collection frequencies specified in Table 7-1 necessitates the use of multiple-event sample collection systems. Multiple-event collection systems should be capable of unattended operation in order to allow for multiple sample collection in a practical, non-labor intensive manner. Multiple-event sampling systems are manufactured commercially or can be custom manufactured by the user for a specific application. Several multiple-event sampling systems are commercially available.

The following sections generally describe multiple-event sampling equipment, procedures, and specifications.

### Multiple-event Collection System Equipment

A typical multiple-event sampling system configuration is presented in Figure 7-10. The multiple-event cartridge sampling system is comprised of the following primary components:

**Inlet probe and manifold assembly** - Constructed of glass (see Figure 7-4) or stainless steel. Used as a conduit to extract sample air from the atmosphere at the required sampling height and distribute it for collection.
**By-pass pump** - A single- or double-headed diaphragm pump, or a caged rotary blower. Used to continuously draw sample air through the inlet probe and manifold assembly at a rate in excess of the sampling system total uptake. All excess sample air is exhausted back to the atmosphere.
**Sample pump** - An oil less vacuum pump, capable of achieving an inlet pressure of -25 inches Hg continually. Used to extract sample air from the manifold assembly and pull it through the sample cartridges during collection.
**Sample inlet line** - Chromatographic-grade stainless steel tubing. Used to connect the sampler to the manifold assembly. This line should be kept as short as possible.
**Ozone scrubber** - A Denuder or Cartridge type of $O_3$ scrubber. Used to remove ambient $O_3$ from the sample air stream prior to exposure to the sample cartridge.
**Sample cartridges** - A plastic housing containing silica gel or C18 solid sorbent (see Section 4.4 of Method TO-11A) coated with DNPH. Used to contain the collected sample for transportation and analysis.
**Adjustable orifice and mass flow meter assembly, or electronic mass flow controller** - An indicating flow control device(s). Used to maintain a constant flow rate (± 10%) over a specific sampling period under conditions of changing temperature (20-40$^{o}$C) and humidity (0-100% relative).
**Microprocessor** - An event control and data acquisition device. Used to allow unattended operation (i.e., activation and deactivation of each sampling event) of the

collection system, and to record sampling event specific process data (i.e., start and end times, elapsed times, collection flow rates, etc.).

**Check valves, solenoid valves, or a multi-port rotary valve** - Eight stainless steel check valves, eight solenoid valves with electric-pulse-operated or low temperature coils, stainless steel bodies, and Viton® plunger seats and o-rings, or 1 multi-port stainless steel body rotary valve with Viton® o-rings. Used to provide access to or isolation of the inlet side of the sample cartridges.

**Solenoid valves or a multi-port rotary valve** - Eight solenoid valves with electric-pulse-operated or low temperature coils, stainless steel bodies, and Viton® plunger seat and o-rings, or 1 multi-port stainless steel body rotary valve with Viton® o-rings. Used to provide access to or isolation of the outlet side of the sample cartridges.

**Tubing and fittings (Stainless steel or Teflon®)** - Hardware for isolation and interconnection of components. Used to complete system interconnections. All stainless steel tubing in contact with the sample prior to analysis should be chromatographic grade stainless steel and all fittings should be 316 grade stainless steel. Note that if the manifold is heated, stainless steel tubing should be used because of the potential of off-gassing of the tubing. **Note: Elapsed-time indicators installed in-line with sample pumps can provide backup documentation that all samples ran for 180 minutes and can indicate that a malfunction occurred with the programmable timers or that power was interrupted.**

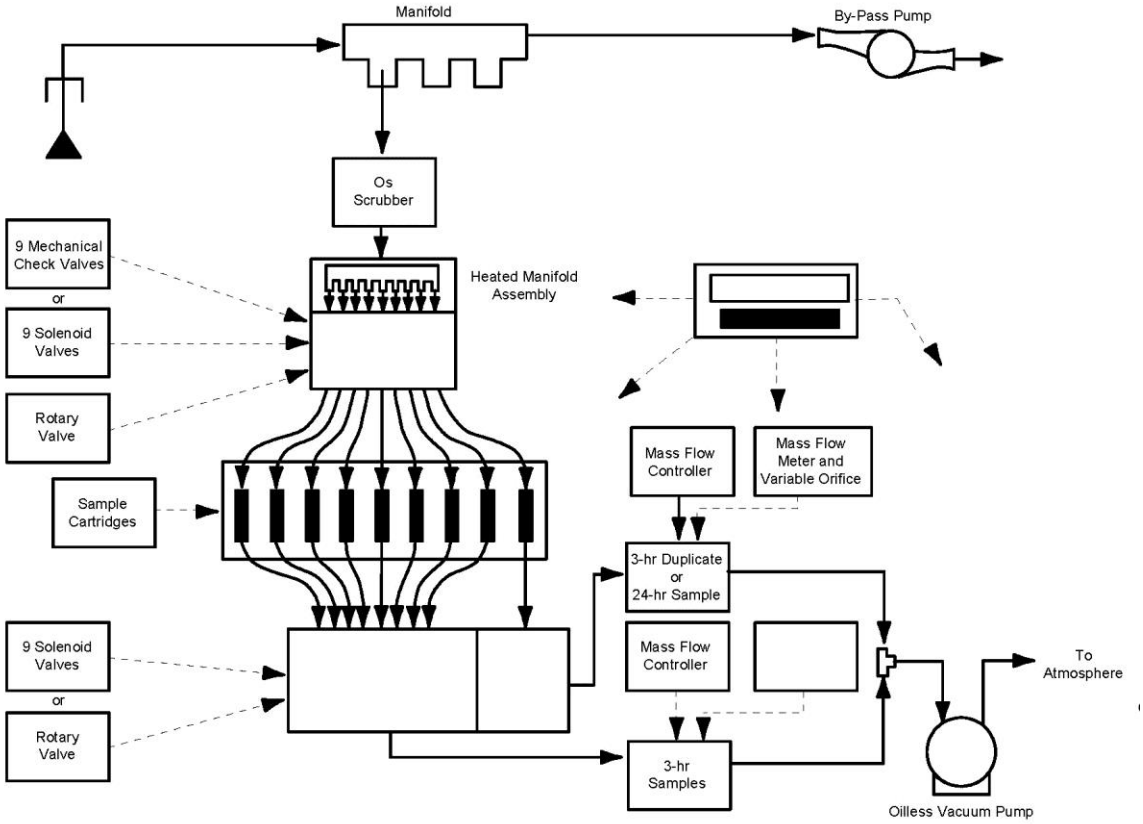


**Figure 7-10. Schematic of a Typical Multiple-Event Carbonyl Cartridge Sampling System**

**Multiple-event Sampling Procedures**

Samples are collected on individual solid sorbent sample cartridges using a single pump and one or more flow control devices. An oil-less vacuum pump draws ambient air from the sampling probe and manifold assembly through the sample cartridge at a constant flow rate during each specific sampling event.

A flow control device(s) is used to maintain a constant sample flow rate through each sample cartridge over each specific sampling period. The flow rate used is a function of the desired total volume of ambient air sampled and the specified sampling period. The flow rate is calculated as follows:

(Eq. 7-8)

$$F = \frac{V \times 1000}{T \times 60}$$

where:

| | | |
|---|---|---|
| F | = | flow rate (milliliters/minute) |
| V | = | desired total volume of ambient air sampled (liters) |
| 1000 | = | milliliters in a liter |
| T | = | sample period (hours) |
| 60 | = | minutes per hour |

For example, if the desired total volume of ambient air to be sampled is 168 L over each individual 3-hour cartridge collection episode, the flow rate specific to each cartridge collection episode is calculated as follows:

$$F = \frac{168 \times 1000}{3 \times 60} = 933 \text{ milliliters/minute}$$

During operation, the microprocessor control device is programmed to activate and deactivate the components of the sample collection system, consistent with the beginning and end of each individual sample collection period.

Cartridge sampling systems can collect sample from a shared sample probe and manifold assembly as described previously or from a dedicated stainless steel sample probe, manifold assembly, and by-pass pump. If a dedicated probe, manifold assembly, and by-pass pump are used, a separate timer device should be incorporated to start the by-pass pump several hours prior to the first sampling event of a multiple-event collection period to flush and condition the probe and manifold assembly components. The connecting lines between the manifold assembly and the sampling system should be kept as short as possible to minimize the system residence time.

The flow rate through each sample cartridge should remain relatively constant over the entire collection period of each sampling event. Each adjustable orifice and mass flow meter assembly, or mass flow controller, used as a flow control device should be calibrated against a primary flow measurement standard (i.e., a bubble flow meter, etc.).

Calibrations should include multiple points of comparison (i.e., indicated flow versus measured flow), across the entire range of the flow control device at increments reflecting 10% of the range. Calibration curves are generated from these comparisons and are used to set actual desired flow rates based on the flow rates indicated by the flow control devices. Calibration of the flow control devices should be repeated periodically according to program specific QA/QC schedules as developed by the user.

A sample probe and manifold assembly should be used to provide a representative air sample for collection and subsequent analysis. The specifications are identical to those of the VOC apparatus. Sample probe and manifold assemblies are commercially available or can be custom fabricated.

## Process Blanks

To ensure data quality and obtain quantitative carbonyl compound concentrations, the collection of blanks is necessary. For the purposes of PAMS, there are three types of blanks used to ensure data quality: *certification blanks*, *field blanks*, and *trip blanks*. A description of each type of blank is as follows:

**Certification blanks** consist of a minimum of three *laboratory blank* cartridges that are eluted with acetonitrile and analyzed to verify the acceptability of a specific cartridge lot from a commercial vendor. Certification blanks are analyzed for each specific lot used for sampling. The mean mass plus three standard deviations (0 + 3s) for the group of three laboratory blanks are used to assess acceptability.
**Field blanks** are blank cartridges which are sent to the field, connected to the sampling system and treated identically to the samples except that no air is drawn through the cartridge. Field blanks are used to assess the background carbonyl levels for cartridges used during the ambient sample collection process.
**Trip blanks** are blank cartridges of the same lot that are sent to the field, stored, and returned to the laboratory with the sample cartridges. Trip blanks are optional and may be used to resolve contamination problems determined from the field blanks. Trip blanks can be used to determine whether the contamination occurred during the sampling process or during the shipping and storage process.

The acceptance criteria for blanks are discussed below. The criteria for certification are considered conservative; most certification blank results will be well below these criteria.

If the mean mass plus three standard deviations (0 ± 3s) for the group of three laboratory blanks meets the criteria, then no further certification or laboratory blanks are required for a particular lot.

If large differences are observed for the three laboratory blank samples, additional laboratory blanks should be analyzed to obtain values for the mean and standard deviation. For the certification blanks to be acceptable, the following criteria should be met:

- Formaldehyde: <0.15 Fg/cartridge*
- Acetaldehyde: <0.10 Fg/cartridge
- Acetone: <0.30 Fg/cartridge
- Other aldehydes or ketones, concentration (per individual component): <0.10 µg/cartridge.

* The equivalent formaldehyde concentration in ppbv as taken from Table 3 in EPA Compendium Method TO-11A is 0.679 ppbv for a 180 L sample volume.

Using good techniques and collection systems (not mixing lots or vendors), field blanks should consistently be at levels that are less than 2 times the average measured laboratory blank value for a specific lot. The laboratory blank is a cartridge blank used for lot certification that has never been shipped to the field. If field blanks do not meet these criteria, corrective action is required. Sites that are unable to achieve these levels for field blanks must determine the source of contamination. An assessment of the air in the sampling shelter may also provide useful information in the determination of sources for field blank and sample contamination.

As a minimum, a sampling system blank sample should be collected at least on an annual basis before initiation of sampling. Collection of a pre- and post-sampling blank is strongly recommended to aid in the qualification of data. If the sampler is subjected to only a single blank audit, a failure to meet QA/QC limits will leave open the question of whether the previous year's data should be flagged or not. It is possible for a sampler to become contaminated (or appear to become contaminated) during the down season, in which case there would be no reason to invalidate the data from the previous year. Pre- and post-season audits remove the ambiguity. Collect a sampler blank using carbonyl-free air when possible. Generate carbonyl free air by purging air through acidic DNPH solution in a bubbling device or DNPH-coated cartridge. Alternatively, measure the carbonyl content of the air using a DNPH-coated cartridge and subtract the carbonyl content in the air from that in the sampler blank. Before collecting the sampler blank, flush the system using the same procedures as used for collecting a sample.

At least one field blank, or the square root of the field sample size, whichever is larger, should be collected and analyzed with each sample lot collected at the site.

## Breakthrough Analysis

Method TO-11A requires the use of a back-up cartridge during the first sampling event. If less than 10% of the analyte is collected on the back-up cartridge, then back-up cartridges are only required for 10% of the field samples. If more than 10% of the analyte is collected on the back-up cartridge, then use back-up cartridges for all sampling events. Breakthrough is more likely to occur when sampling at high flow rates, when sampling very dry or very humid air, when sampling air containing high levels of oxides, and when sampling air containing high levels of carbonyl compounds. Perform breakthrough analyses on the 24-hour sample or on the duplicate 3-hour sample. Be careful in determining the flow rate because two cartridges installed in series create a higher

pressure drop, decreasing the sampling rate. If breakthrough occurs, minimize the breakthrough by replacing the ozone scrubber more frequently, sampling at a lower flow rate, using larger capacity cartridges, or heating the cartridges slightly to prevent moisture condensation when sampling very humid air.

## Quality Assurance and Quality Control

General quality assurance and quality control requirements are provided in Section 13.6 of Method TO-11A. Each laboratory should develop SOPs for the sampling and analysis of carbonyls and should develop criteria for sampling and analysis that are specific to the laboratory. Table 7-6 provides the quality assurance and quality control procedures consistent with Method TO-11A.

**Table 7-6. Quality Assurance and Quality Control Criteria**

| Parameter | Frequency | Limits | Corrective Action |
|---|---|---|---|
| Flow calibration | Each sampling event, pre- and post-checks | ±10% | Mark sample as suspect |
| Mass flow meter calibration factor | Every quarter | 1.0 ± 0.1 | Repair mass flow meter |
| Leak check | Each sampling event, pre- and post-checks | No air flow | Check for leaks |
| Sampler blank | Pre- and post-seasons | > MDL | Clean sampler, qualify data if required |
| Collocated samples | 10% of field samples | ±20% | Mark sample as suspect |
| Back-up cartridges | 10% of field samples | ±10% of total on back-up cartridge | Use back-up cartridges for all samples |
| Trip blanks | 10% of field samples | <0.15 µg formaldehyde/cartridge | Blank correct data |
| Field blanks | 10% of field samples | <0.15 µg formaldehyde/cartridge | Blank correct data |
| Spiked cartridges | 10% of field samples | 80 to 120% recovery | Flag data |
| Multi-point calibration | Every 6 months | 0.999 | Recalibrate |
| Continuing calibration | Every analytical run | ±10% | Recalibrate |

| Parameter | Frequency | Limits | Corrective Action |
|---|---|---|---|
| standard | | | |
| Method detection limits | Annually or after each instrument change | <0.1 ppbv for 180 L sample volume | Modify instrument as needed |
| Replicate injections | 10% of samples | ±10% | Reanalyze samples |
| Performance evaluation sample | Before and after samples | ±15% | Reanalyze samples |

# PAMS Meteorological Monitoring

The PAMS program must include provisions for enhanced monitoring of ozone, the precursors to ozone, and both surface and upper-air meteorological conditions. Although the PAMS rule establishes a requirement for meteorological monitoring, it does not provide specifics; e.g., a list of the meteorological variables to be monitored. Currently, the list of meteorological variables includes: wind direction, wind speed, temperature, humidity, atmospheric pressure, precipitation, solar radiation, UV radiation, and mixing height. Table 7-7 provides an overview of the requirements for monitoring these variables.

**Table 7-7. Overview of PAMS Meteorological Monitoring Requirements**

| QUESTION | ANSWER |
|---|---|
| Where to monitor? | All serious, severe, and extreme ozone nonattainment areas |
| How many sites? | 2 to 5 surface sites per network plus one upper-air site |
| When to monitor? | Routine continuous monitoring during the PAMS monitoring season (3 months per year minimum) |
| How long? | Until the area is redesignated as attainment for ozone |
| What variables? | Wind Direction [a]<br>Wind Speed [a]<br>Air Temperature [a]<br>Humidity [a]<br>Solar Radiation [b]<br>Ultraviolet Radiation [b]<br>Barometric Pressure [b]<br>Precipitation [b, c] |

| QUESTION | ANSWER |
|---|---|
| What interval? | Surface measurements should be continuous and should be reported hourly. Upper-air measurements (profiles of wind and temperature) should be made at least 4 times per day. |
| What levels? | Surface measurements should be made at 2 meters (temperature and humidity) or 10 meters (wind direction and wind speed). Other surface measurements are nominally made at about 2 meters. |

[a] A required measurement for all PAMS sites. [b] A required measurement for at least one site per PAMS area. [c] Precipitation data from other sources (National Weather Service or others) are acceptable on a case-by-case basis.

## Surface Meteorological Monitoring

A minimum level of surface meteorological monitoring is required for each PAMS site regardless of the site type (see Table 7-1). The minimum level includes measurements of wind direction, wind speed, ambient temperature, and humidity (e.g., dew point or relative humidity). In addition, measurements of solar radiation, ultraviolet radiation, barometric pressure, and precipitation are required for at least one site in each PAMS network.

The selection of an appropriate site for the surface meteorological measurements depend on the intended use of the data; i.e., the Data Quality Objectives (DQOs). Ideally, for general application, the site should be located in a level open area away from the influence of obstructions such as buildings or trees. The area surrounding the site should have uniform surface characteristics. Although it may be desirable to collocate the surface meteorological measurements with the ambient air quality measurements, collocation of the two functions may not be possible at all PAMS sites without violating one or more of the above criteria.

System specifications for the surface measurements are given in Table 7-8. The recommended sampling interval of the meteorological sensors by the data acquisition system is 10 seconds. Data for all variables should be processed to obtain one hour averages. The data acquisition system clock should have an accuracy of ±1 minute per week.

**Table 7-8. System Specifications for Surface Meteorological Measurements[a]**

| Variable | Range | Accuracy | Resolution | Constants Time/Distance |
|---|---|---|---|---|
| Wind Speed | 0.5 to 50 m/s | ±0.2 m/s + 5% | 0.1 m/s | 5 m (63% response) |
| Wind Direction | 0 to 360 deg. | ±5 deg. | 1 deg. | 5 m (50% recovery) |
| Air Temperature | -20 to 40 $^{o}$C | ±0.5 $^{o}$C | 0.1 $^{o}$C | 60 s (63% response) |

| Variable | Range | Accuracy | Resolution | Constants Time/Distance |
|---|---|---|---|---|
| Dew Point | -30 to +30 $^{o}$C | ±1.5$^{o}$C | 0.1$^{o}$C | 30 minutes |
| Relative Humidity | 0 to 100 %RH | ±3 %RH | 0.5 %RH | 60 s (63% response) |
| Solar Radiation | 0 to 1200 W m$^{-2}$ | ±5% | 10 W m$^{-2}$ | 60 s (99% response) |
| UV Radiation | 0 to 12 W m$^{-2}$ | ±5% | 0.01 W m$^{-2}$ | 60 s (99% response) |
| Barometric Pressure | 800 to 1100 hPa | ±3 hPa | 0.5 hPa | 60 s (63% response) |
| Precipitation | 0 to 30 mm/hr | ±10% | 0.25 mm | 60 s (63% response) |

[a] Quality assurance guidance for auditing these values is provided in *Quality Assurance Handbook for Air Pollution Measurement Systems. Volume IV - Meteorological Measurements.*

## Upper-Air Meteorological Monitoring

The design of the upper-air monitoring program will depend upon region specific factors such that the optimal design for a given PAMS region is expected to be some combination of remote sensing and conventional atmospheric soundings - in special cases, the upper-air monitoring plan may be augmented with data from aircraft and/or tall towers. Data from existing sources, e.g., the National Weather Service (NWS) upper-air network, should be considered and integrated with the PAMS monitoring plan.

Remote sensing systems (e.g., doppler SODAR) provide continuous measurements of wind speed and wind direction as a function of height. These data are needed to provide wind data with the necessary temporal and vertical resolution to evaluate changes in transport flow fields coincident with the evolution of the convective boundary layer. Such evaluations will aid in the diagnosis of conditions associated with extreme ozone concentrations.

Conventional atmospheric soundings obtained using rawinsondes or their equivalent are needed to provide atmospheric profiles with the necessary vertical resolution for estimating the mixing height and for use in initializing the photochemical grid models used for evaluating ozone control strategies. Such soundings should extend to the top of the CBL or 1000 meters, whichever is greater, and should include measurements of wind speed, wind direction, temperature, and humidity. Four soundings per day are needed to adequately characterize the development of the atmospheric boundary layer. These soundings should be acquired just prior to sunrise when the atmospheric boundary layer is usually the most stable; in mid-morning when the growth of the boundary layer is most rapid; during mid-afternoon when surface temperatures are maximum; and in late-afternoon when the boundary layer depth is largest. Soundings obtained from a NWS upper-air station may be used to fulfill part of this requirement depending on the time of the sounding and the location of the NWS site.

## Table 7-9. Capabilities and Limitations of Meteorological Measurement Systems for Vertical Profiling of the Lower Atmosphere

Typical Maximum Height/Range (meters agl)[a]

| | Measurement System | | | | | | |
|---|---|---|---|---|---|---|---|
| **Variable** | **Tower** | **SODAR** | **Mini-SODAR** | **RADAR** | **RADAR with RASS** | **Radio-sonde** | **Tether-sonde** |
| **Wind Speed** | **100[b]** | **600** | **300** | **2-3 km** | **2-3 km** | **>10 km** | **1000** |
| **Wind Direction** | **100[b]** | **600** | **300** | **2-3 km** | **2-3 km** | **>10 km** | **1000** |
| **Wind Sigmas [c]** | **100[b]** | **600** | **300** | **2-3 km** | **2-3 km** | **d** | **d** |
| **Relative Humidity** | **100[b]** | **d** | **d** | **d** | **d** | **>10 km** | **1000** |
| **Temperature** | **100[b]** | **d** | **d** | **d** | **1.2 km** | **>10 km** | **1000** |

Typical Minimum Height (meters agl)[a]

| | Measurement System | | | | | | |
|---|---|---|---|---|---|---|---|
| **Variable** | **Tower** | **SODAR** | **Mini-SODAR** | **RADAR** | **RADAR with RASS** | **Radio-sonde** | **Tether-sonde** |
| **Wind Speed** | **10** | **50** | **10** | **100** | **100** | **10** | **10** |
| **Wind Direction** | **10** | **50** | **10** | **100** | **100** | **10** | **10** |
| **Wind Sigmas [c]** | **10** | **50** | **10** | **100** | **100** | **d** | **d** |
| **Relative Humidity** | **2** | **d** | **d** | **d** | **d** | **10** | **10** |
| **Temperature** | **2** | **d** | **d** | **d** | **100** | **10** | **10** |

Typical Resolution (meters)

| | Measurement System | | | | | | |
|---|---|---|---|---|---|---|---|
| **Variable** | **Tower** | **SODAR** | **Mini-SODAR** | **RADAR** | **RADAR with RASS** | **Radio-sonde** | **Tether-sonde** |
| **Wind Speed** | **2-10** | **25** | **10** | **60-100** | **60-100** | **5-10** | **10** |
| **Wind Direction** | **2-10** | **25** | **10** | **60-100** | **60-100** | **5-10** | **10** |
| **Wind Sigmas [c]** | **2-10** | **25** | **10** | **60-100** | **60-100** | **d** | **d** |
| **Relative Humidity** | **2-10** | **d** | **d** | **d** | **d** | **5-10** | **10** |
| **Temperature** | **2-10** | **d** | **d** | **d** | **60-100** | **5-10** | **10** |

[a] Meters above ground level

[b] Typically meteorological towers do not exceed 100 m. However, radio and TV towers may exceed 600 m.
[c] The standard deviation of horizontal and vertical wind components.
[d] No capability for this variable

The upper-air measurements are intended for more macro-scale application3 than are the surface meteorological measurements. Consequently, the location of the upper-air site need not be associated with any particular PAMS surface site. Factors that should be considered in selecting a site for the upper-air monitoring include whether the upper-air measurements for the proposed location are likely to provide the necessary data to characterize the meteorological conditions associated with high ozone concentrations, and the extent to which data for the proposed location may augment an existing upper-air network. Near lake shores and in coastal areas, where land/sea/lake breeze circulations may play a significant role in ozone formation and transport, additional upper-air monitoring sites may be needed; this consideration would also apply to areas located in complex terrain. All of the above are necessary components of the DQOs for an upper-air monitoring plan.

## Estimation of Mixing Height

In addition to the directly measured meteorological variables, estimates are also required of the depth of the mixed layer (i.e., mixing height). The mixing height is a derived variable indicating the depth through which vertical mixing of pollutants occurs. Reliable estimates of the mixing height are essential to dispersion modeling in support of PAMS.

Additional information for all the topics discussed in this chapter can be found in the Technical Assistance Document for Sampling and Analysis of Ozone Precursors (EPA/600-R-98/161) and the "Quality Assurance Handbook for Air Pollution Measurement Systems, Volume IV: Meteorological Measurements" for recommended procedures for quality assurance and audit activities. The procedures provided in "On-Site Meteorological Program Guidance for Regulatory Modeling Applications" should be followed for processing of meteorological measurements.

# References

Technical Assistance Document for Sampling and Analysis of Ozone Precursors (EPA/600-R-98/161)

Quality Assurance Handbook for Air Pollution Measurement Systems, Volume IV.