Chapter 2

Basic Gas Properties and Mathematical Manipulations

This chapter identifies the basic gas properties and mathematical manipulations.

Temperature

The Fahrenheit and Celsius Scales

The range of units on the Fahrenheit scale between the freezing and boiling point of water at one atmosphere (atm) pressure is 180 (212°F-32°F= 180°F); on the Celsius scale, the range is 100 (100°C-0°C = 100°C). Therefore, each Celsius degree is equal to 9/5 or 1.8 Fahrenheit degrees. To be able to convert from one system to the other, the following equations can be used:

(Eq. 2-1) $$°F = 1.8°C + 32$$

(Eq. 2-2) $$°C = \frac{(°F - 32)}{1.8}$$

Where: °F = degrees Fahrenheit
°C = degrees Celsius

Absolute Temperature

Experiments in which a gas volume is determined as a function of temperature (at a constant pressure) yield results similar to the data presented in Figure 2-1(a). The solid portion of each line represents the gaseous state. If each line is extrapolated (dashed portion of line) to a volume of zero, they all intersect at a common temperature (- 273.15°C or - 459.67°F). This is the temperature at which a gas, if it did not condense, would theoretically have a volume of zero. This temperature (-273.15°C or - 459.67 °F) is called *absolute zero*. Another temperature scale, developed by and named after English physicist Lord Kelvin, in 1848, begins at absolute zero and has temperature intervals equal to Celsius

units. This absolute temperature scale is in units of *Kelvin* (K). It is not proper to use the term or symbol for "degrees" in association with the *Kelvin scale*. A similar scale was developed, in 1859, by William Rankine, a Scottish engineer and physicist, to parallel the Fahrenheit scale and is called the *Rankine scale* (°R). The following formulas can be used to convert temperatures to their respective absolute scales.

(Eq. 2-3) $$K = °C + 273.16$$

(Eq. 2-4) $$°R = °F + 459.67$$

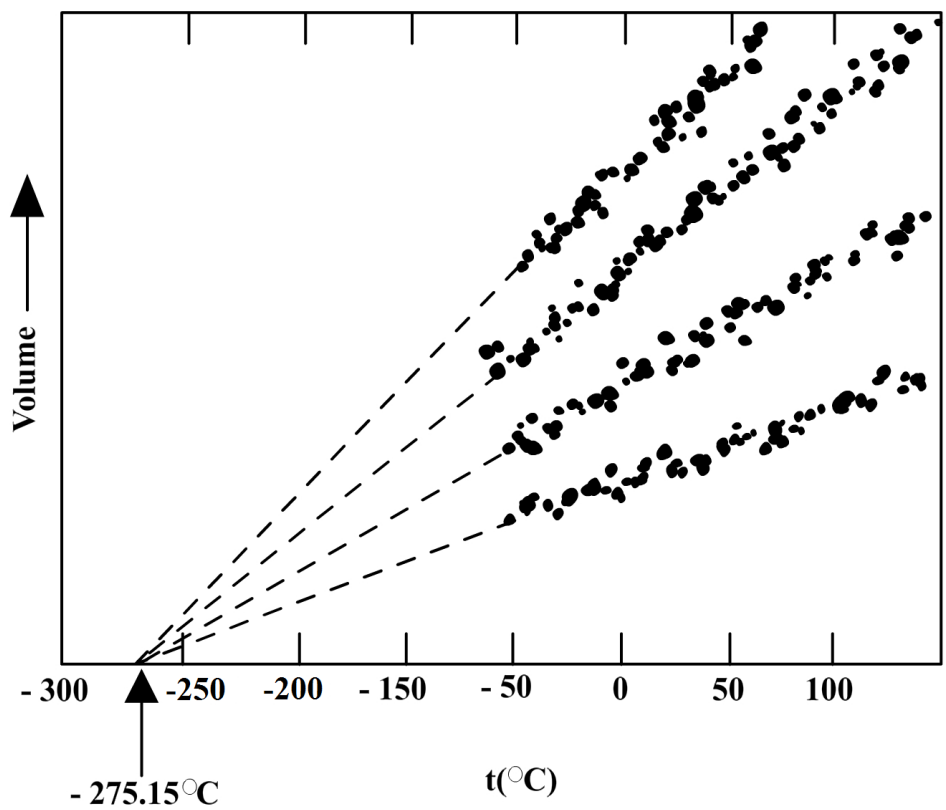

Figure 2-1(a). Temperature relationships.

Relationships of the absolute temperature systems are shown graphically in Figure 2-1(b). The symbol "T" will be used throughout this manual to denote absolute temperatures, and the "t" will be used to indicate Fahrenheit or Celsius degrees. The absolute temperatures are always in volume calculations involving temperature and pressure.

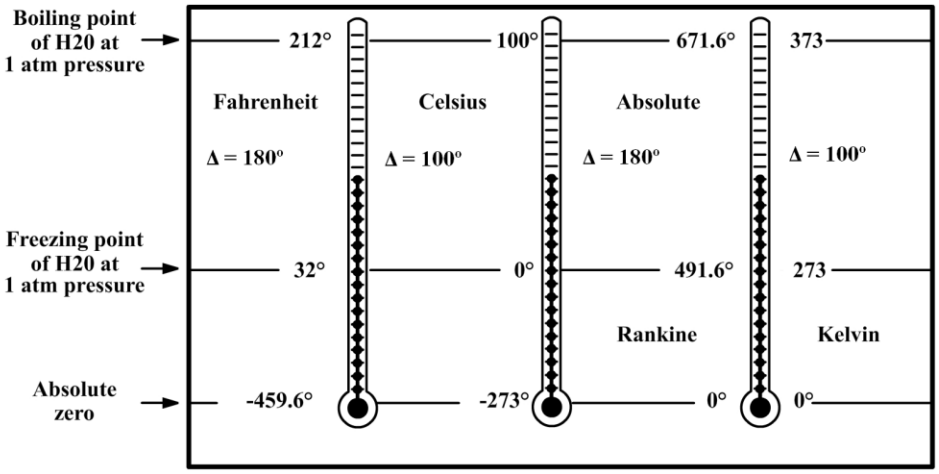

Figure 2-1(b). Relationships of the absolute temperature systems.

Pressure

Definition of Pressure

A body may be subject to three kinds of stress: shear, compression, and tension. Fluids are unable to withstand tensile stress; hence, they are subject to shear and compression only. *Unit compressive stress in a fluid is termed pressure* and is expressed as *force per unit area.*

Pressure

Metric	English
gm_f/cm^2	$lb_f/in.^2$ (psi)

Pressure is equal in all directions at a point within a volume of fluid and acts perpendicular to a surface.

Barometric Pressure

Barometric pressure and atmospheric pressure are synonymous. These pressures are measured with a barometer and are usually expressed as inches or millimeters of mercury. *Standard barometric pressure is the average atmospheric pressure at sea level, 45° north latitude at 35°F and is equivalent to a pressure of 14.696 pounds-force per square inch exerted at the base of a column of mercury 29.921 inches high (in the English System). In the metric system, standard barometric pressure is equivalent to a pressure of 1033.23 grams force per square centimeter exerted at the base of a column of mercury 760 mm high.* Weather and altitude are responsible for barometric pressure variations.

Torricelli Barometer

The Torricelli, or mercurial, barometer was first used by one of Galileo's students, Evangelista Torricelli, in 1643. A mercurial barometer is made by sealing a tube, about 32 inches long, at one end. The tube is filled with mercury. It is then inverted and placed into a container that is partially filled with mercury. The mercury in the tube will fall until the weight of the mercury in the tube is equal to the force of the air pressure on the mercury in the container. As shown in Figure 2-2, the manometer and the mercurial barometer work on the same principle – atmospheric pressure being measured with reference to a vacuum.

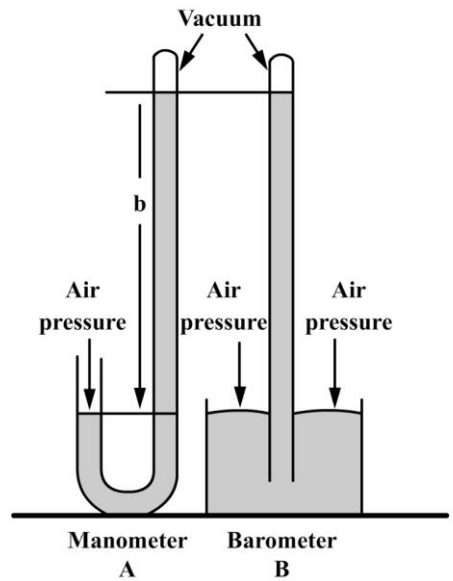

Figure 2-2. The manometer and mercurial barometer.

Fortin Barometer

Since the mercurial barometer is the most accurate measurement (calibration uncertainty of 0.001 to 0.03% of reading) of atmospheric pressure, it is still in wide use today. The most common modified version of the mercurial barometer is the Fortin type shown in Figure 2-3.

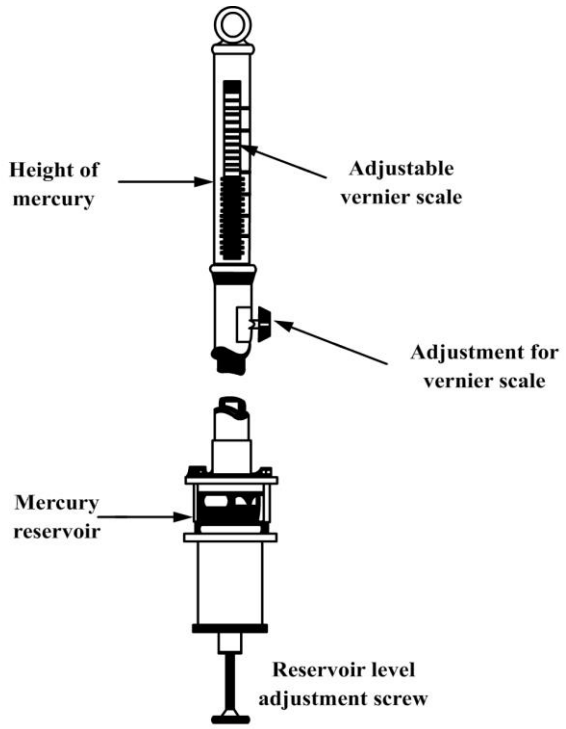

Figure 2-3. Fortin barometer.

The height of the mercury column in a Fortin barometer is measured from the tip of the ivory index point (see the enlargement in Figure 2-4) to the top of the mercury column. The mercury level in the glass cylinder (ambient-vented cistern) is adjusted until the ivory index point just pricks the surface of the mercury. This is done by turning the datum-adjusting screw. Then the vernier scale is adjusted until the bottom of it is even with the top of the mercury meniscus. After the vernier scale is adjusted, the height of the mercury column is read.

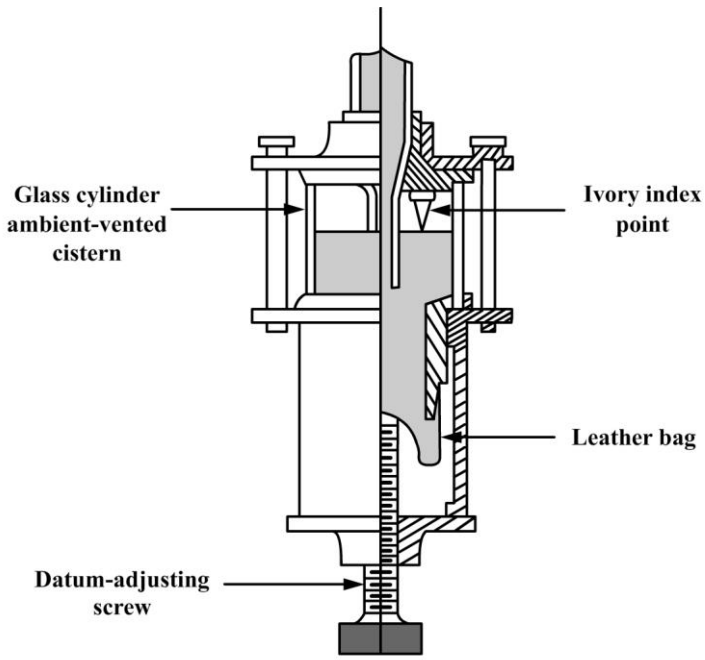

Figure 2-4. Blow-up of Fortin barometer.

A typical vernier scale is shown in Figure 2-5. The barometric pressure indicated in the figure is determined in the following way:

> The bottom of the vernier scale indicates not only the integer component of the barometric pressure, but also the tenths components – in this case, 29.9. The hundredths component is indicated by the match between the outer scale and the vernier – in this case, 0.04. The readings are totaled to determine the barometric pressure: 29.9 + 0.04= 29.94 in. Hg. The equivalent metric reading is 76.05 cm.

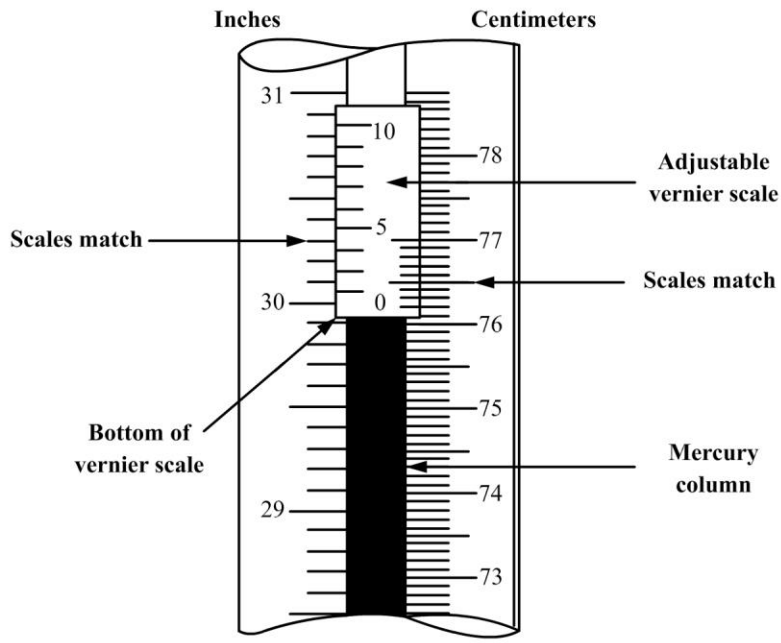

Figure 2-5. Blow-up of vernier scale.

Aneroid Barometer

The aneroid barometer is usually not as accurate as a Torricelli barometer. However, aneroid barometers are more widely used because they are smaller, more portable, less expensive, and easier to adapt to recording instrumentation than are Torricelli barometers.

The aneroid barometer usually consists of a metal chamber, bellows, or sylphon (accordion-like) cell that is partially evacuated. A spring is used to keep the metal chamber from collapsing (see Figure 2-6). The width of the chamber is determined by the balance between the spring and the force exerted by the atmosphere. The width of the chamber is indicated by a pointer and scale that can be calibrated to read directly in units of pressure (i.e., millimeters or inches of mercury, etc.). The pointer movement can be amplified by using levers. Read-out systems can vary from visual scales to recording devices. The combination of an aneroid barometer and an automatic recording device is called a barograph.

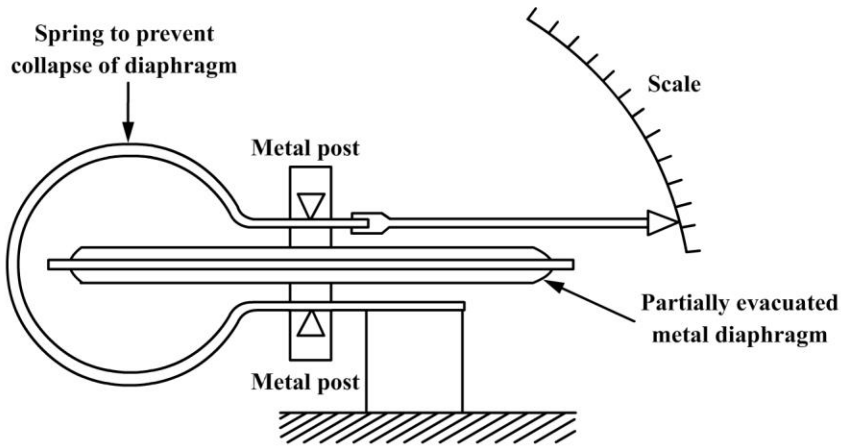

Figure 2-6. Aneroid barometer.

Pressure Transducers

A transducer is a device that is activated by power from one system and supplies power in some other form to a second system. Conventional pressure transducers use an elastic element that converts the energy from a pressure differential into a displacement of a mechanical device. An example of a mechanical pressure transducer is shown in Figure 2-7. Other pressure transducers convert the mechanical displacement into an electrical signal. An example of an electrical transducer is shown in Figure 2-8. Electrical pressure transducers have become very popular because the signal is easy to measure, control, amplify, transmit, and record.

Other variations on the pressure transducer include use of the principles of conductivity and capacitance to measure pressure. A *strain gauge* the use of change in conductivity which results from the deflection of a material as it senses pressure changes. The deflection of the sensing material alters its resistance which is related to the change in pressure. Another technology uses the change of capacitance, due to change of the distance between charged plates, to calculate the pressure.

Pressure sensors can vary drastically in technology, design, performance, application, suitability and cost. A conservative estimate would be that there are 50 different technologies and hundreds of companies making pressure sensors.

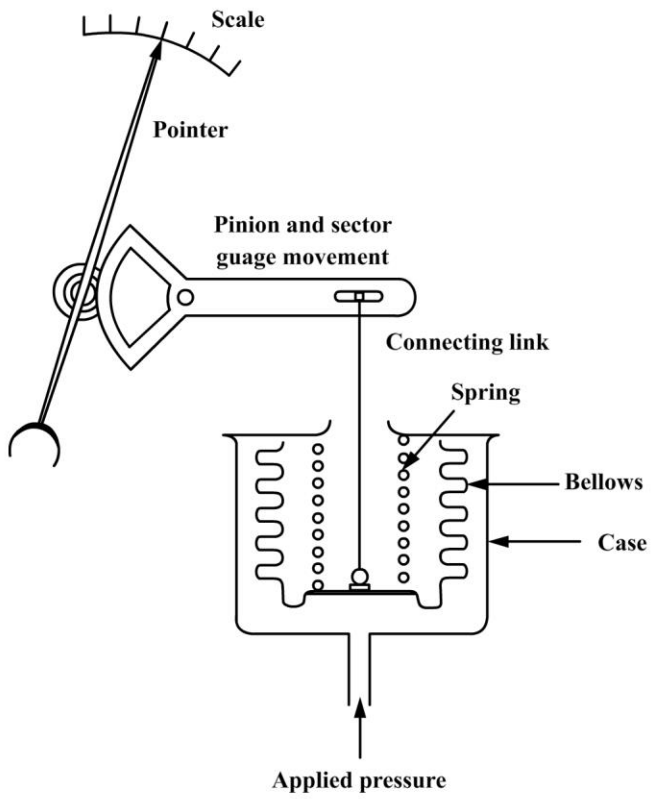

Figure 2-7. Mechanical pressure transducer.

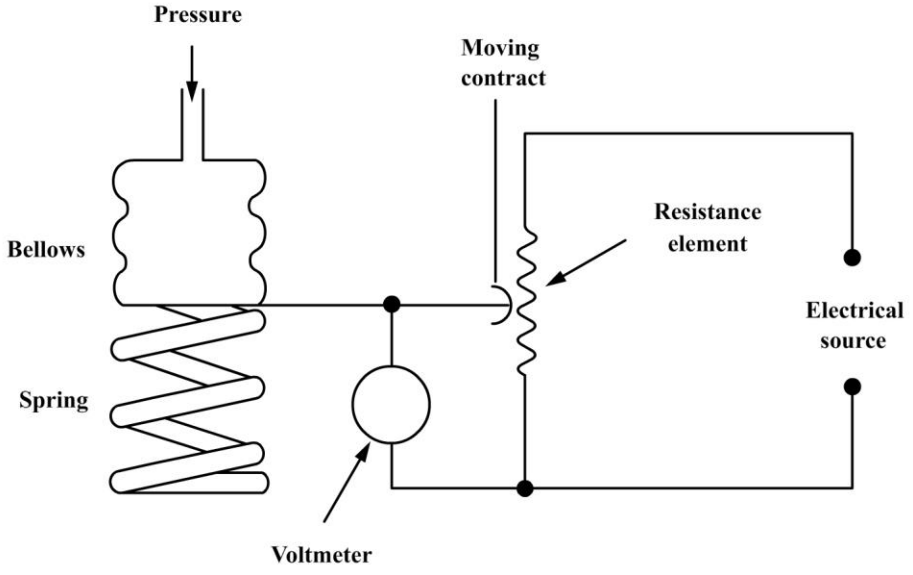

Figure 2-8. Electrical pressure trasducer.

Gauge Pressure

Gauges indicate the pressure of the system of which they are a part relative to ambient barometric pressure. If the pressure of the system is greater than the pressure prevailing in the atmosphere (atmospheric pressure), the gauge pressure is expressed as a positive value; if smaller, the gauge pressure is expressed as a negative. The term "vacuum" designates a negative gauge pressure.

The abbreviation "g" is used to specify a gauge pressure. For example, *psig* means pounds-force per square inch gauge pressure.

The pressure you measure when determining if your car tire is properly inflated is a gauge pressure. In fact, the term, inflated, refers to a system, which is pressurized, and as such we know it represents a positive pressure relative to atmospheric pressure. The opposite is true for an evacuated SUMMA flask used to collect an air sample. In this case the air is drawn out of the flask prior to sampling, creating a negative gauge pressure relative to atmospheric pressure, referred to as a *vacuum*. At the time of sampling, the valve of the flask is opened, the pressure differential between the atmosphere and the flask (negative relative to the atmosphere) creates the driving force necessary to draw in the sample.

Absolute Pressure

Because gauge pressure (which may be either positive or negative) is the pressure relative to the prevailing atmospheric pressure, the gauge pressure, added algebraically to the prevailing atmospheric pressure (which is always positive), provides a value that is called "absolute pressure." The mathematical expression is:

(Eq. 2-3) $$P = P_b + \rho_g$$

Where: P = *absolute pressure*
P_b = *atmospheric pressure*
ρ_g = *gauge pressure*

Note: P, P_b, and ρ_g must be in the same units of pressure before they can be added (i.e., all must be in inches of mercury, mm of mercury, etc.).

The abbreviation "a" is sometimes used to indicate that the pressure is absolute. For example, *psia* means pounds per square inch absolute pressure. It is convention to denote a gauge pressure with a lower-case "p" and a pressure on an absolute basis with an upper-case "P."

Equation 2-3 allows conversion of one pressure system to the other. The relationship of the two pressure systems is shown graphically in Figure 2-9 using two typical gauge readings, 1 and 2. Gauge reading 1 is above the prevailing atmospheric pressure and, hence, is expressed as a positive value. Gauge reading 2 is below the prevailing atmospheric pressure and, therefore, is expressed as a

negative value. Gauge reading 3 has both sides open to the atmosphere; hence, the gauge pressure is zero.

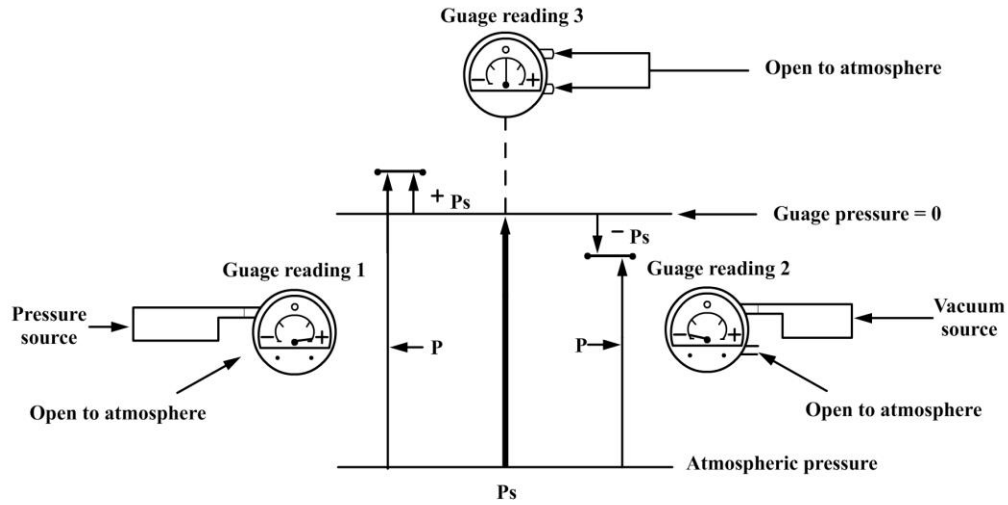

Figure 2-9. Absolute-atmospheric-guage pressure relationship.

Example Problems

Problem 1:

The primary *pressure* gauge of a regulator attached to a compressed nitrogen cylinder indicates a reading of 2000 *psig*. An aneroid barometer mounted on the wall indicates that the atmospheric pressure is 14.2 *psi*. What is the absolute pressure inside the tank?

Solution: $P = P_b + p_g = 14.2 + 2000$

$P = 2014.2$ *psia*.

Problem 2:

A water manometer is used to measure the pressure inside an evacuated flask. The water manometer indicates that the evacuated flask has a vacuum of 26 inches of water. A nearby Fortin barometer indicates that atmospheric pressure is 752.6 mm Hg. What is the absolute pressure inside the flask?

Solution:

Before p_g and P_b can be added to give *P,* both must be in the same unit of pressure. It is most common for p_s to be converted to the same units as P_b since P_b is in much larger units.

Since 1 inch of Hg = 13 inches H=O (Hg is 13 times denser than water)

$$(26\,\text{inches H}_2\text{O})\left(\frac{1\,\text{inch Hg}}{13\,\text{inches H}_2\text{O}}\right)\left(\frac{25.4\,\text{mm}}{1\,\text{inch}}\right) = 50.8\,\text{mm Hg}$$

Now p_g and P_b can be added. p_g is negative because the evacuated flask is at a *vacuum, or below atmospheric pressure.*

$$P = P_b + \rho_g = 752.6\,\text{mm Hg} + (-50.8\,\text{mm Hg})$$
$$P = 701.8\,\text{mm Hg}$$

The Concept of Pressure-head

Pressure-head is the height of a column of fluid required to produce a given pressure at its base.

The relationship between pressure and pressure-head is:

(Eq. 2-4)
$$p = \rho_f h \left(\frac{g}{g_c} \right)$$

Where:

	p	= *pressure, force/area*
	ρ_f	= *density of fluid, mass/volume*
	g	= *local acceleration due to gravity, length/time*^{2}
	g_c	= *dimensional constant*
	h	= *pressure-head in terms of* ρ_f *length*

Pressure-head may be expressed in terms of any fluid that is convenient, − e.g., Hg or H_2O.

Dalton's Law of Partial Pressure

When gases or vapors (having no chemical interaction) are present as a mixture in a given space, the pressure exerted by a component of the gas-mixture at a given temperature is the same as would be exerted if the gas-mixture filled the whole space alone. *The pressure exerted by one component of a gas-mixture is called its partial pressure. The total pressure of the gas-mixture is the sum of the partial pressures.*

Expressed mathematically:

$$p_{total} = \sum p_i$$

Where:

	p_{total}	= *total pressure exerted by the system*
	p_i	= *pressure of each component of the system*
	$\sum p_i$	= $p_1 + p_2 + \ldots + p_{19}$
	($\sum$: means "sum of")	

The Ideal Gas Laws

Ideal gases are gases whose molecules do not attract one another and which occupy no part of the whole volume. Although there are no gases which have these properties, real gases, which deviate very slightly from ideal gas behavior under ordinary temperature and pressure conditions, may be considered to be ideal gases.

Boyle's Law

Boyle's Law states: when the *temperature (T)* is held constant, the *volume (V)* of a given mass of an ideal gas of a given composition varies inversely as the absolute pressure (P), i.e.:

$$V \alpha \frac{1}{P} \quad \textit{(at constant T)}$$

Where: α = *proportional to.*

One can see that, as the pressure on a gas system increases, the volume of the gas system will decrease and vice versa.

Charles' Law

Charles' Law states: when the *pressure (P)* is held constant, the *volume (V)* of a given mass of an ideal gas of a given composition varies directly as the *absolute temperature (T), i.e.,:*

$$V \alpha T \quad \textit{(at constant P)}$$

In other words, as the temperature of a gas system increases, the volume will also increase and vice versa.

The Law for Ideal Gases

Both Boyle's and Charles' Law are satisfied in the following equation:

(Eq. 2-5) $$PV = nRT$$

Where:

	P	= *absolute pressure*
	V	= *volume of a gas*
	T	= *absolute temperature*
	R	= *universal gas-constant*
	n	= *number of moles of a gas.*

A mole of a substance is the substance's molecular weight, expressed in mass

units, where the substances molecular weight is the sum of the atomic weights of the atoms which compose the substance.
We know that

$$n = \frac{m}{M}$$

Where: m = *mass of a gas*
M = *molecular weight of a gas*

therefore:

$$PV = nRT = \frac{m}{M}RT$$

The units of R depend upon the units of measurement used in the equation. Some useful values are:

$$(1)\ R = 0.082\,(\ell)(atm)(\mathrm{K})^{-1}(\mathrm{g}\text{-}mole)^{-1}$$
$$(2)\ R = 62.4\,(\ell)(\mathrm{mm\ Hg})(\mathrm{K})^{-1}(\mathrm{g}\text{-}mole)^{-1}$$

Where the units are:

$V(\ell)$
$m(\mathrm{g})$
$M(\mathrm{g/g}\text{-}mole)$
$T(\mathrm{K})$
P[*atm* for (1) or
mm Hg for (2)].

Different values of R can be obtained by utilizing the appropriate conversion factors.

Molar Volume ($\overline{V}$)

One mole of any gas at 273 K (0 °C) and 760 mm Hg will occupy 22.414 liters. This constant is obtained from the ideal gas law. From Equation 2-5:

If:
P = 760 mm Hg
n = 1 *mole*
R = $62.4\,(\ell)(\mathrm{mmHg})(\mathrm{g}\text{-}mole)^{-1}(K)^{-1}$
T = 273 K
V = V *(molar volume)*

then: $P \times V = n \times R \times T$

$$(760\text{ mm Hg})(V) = (1\text{ g - }mole)\left(62.4\frac{\ell\cdot\text{mm Hg}}{\text{g - }mole\,\text{K}}\right)(273\text{ K})$$

$$V = \frac{(1)(62.4)(273)}{760}\ell$$

$$V = 22.414\ell = V$$

Therefore, one *mole* of an ideal gas at 273 K and 760 mm Hg occupies 22.414 liters (l). In other words, the molar volume ($\overline{V}$) of an ideal gas at 273 K and 760 mm Hg is 22.414 ℓ/mole.

At *EPA standard conditions (760 mm Hg, 298 K),* one *mole* of any gas will occupy 24.46ℓ. The volume per *mole* constant for any gas at a given pressure and temperature is called the *molar volume* and is symbolized by $\overline{V}$.

Gas Density

Finally, we can use the ideal gas law to estimate gas density. Density is the ratio of the mass of a material to the volume that material occupies. For accurate values, gas densities should be determined from reference texts. However, an estimate of the gas density can be determined from the ideal gas law. Recognizing that the number of moles is given by mass (m) divided by molecular weight (MW), the ideal gas law may be written:

(Eq. 2-6)

$$PV = nRT = \frac{m}{M}RT$$

$$\frac{m}{V} = \rho = \frac{PM}{RT}$$

Where:

	ρ	= *density*
	P	= *absolute pressure*
	M	= *molecular weight*
	T	= *absolute temperature*
	R	= *universal gas constant*

Another method of determining density is by utilizing the fact that there are 24.46 liters per *g-mole* at 298 K and 760 mm Hg.

In the relationship, $\rho = m/V$ if V is in terms of molar volume, $V(\ell/\text{g - }mole$ of a gas at STP), then m must be in terms of molecular weight, $M(g/\text{g - }mole)$. So $\rho = m/V$ at a given temperature and pressure.

$$\rho = \frac{M\dfrac{298}{T}\dfrac{P}{760}}{24.46}$$ *, corrected to standard temperature and pressure conditions*

Where: ρ = *gas density* (g/ℓ)
M = *molecular weight* (g/g - *mole*)
24.46 = *molar volume* (ℓ/g - *mole*)
298 = *temperature* (K) *at standard conditions*
T = *temperature* (K) *at actual conditions*
760 = *pressure* (mm Hg) *at standard conditions*
P = *pressure* (mm Hg) *at actual conditions*

Standard Conditions for Atmospheric Sampling

To be able to compare gas sampling data collected by various agencies and other organizations, all gas volumes must be corrected to a set of predetermined ("standard") conditions. For atmospheric or ambient sampling, these conditions are:

25°C or 298 K, and 760 mm Hg.

The equation used to correct volumes sampled to standard conditions is:

(Eq. 2-7)

$$V_2 = (V_1)\left(\frac{P_1}{P_2}\right)\left(\frac{T_2}{T_1}\right)$$

$$V_2 = (V_1)\left(\frac{P_1}{760\text{ mm Hg}}\right)\left(\frac{298\text{ K}}{T_1}\right)$$

$$V2 = (V1)(0.39)\left(\frac{P_1}{T_1}\right)$$

Where: V_2 = *volume of gas at 2nd conditions or at* P_2 *and* T_2, ℓ
V_1 = *volume of gas at 1st conditions of* P_1 *and* T_1, ℓ
T_1 = *initial temperature of gas,* K
T_2 = *final temperature of gas, in this case* = 298 K
P_1 = *initial pressure of gas,* mm Hg
P_2 = *final pressure of gas, in this case* = 760 mm Hg

$$0.39 = \frac{298}{760}$$

The term "standard conditions for temperature and pressure" is abbreviated STP.

Origin and Definition of Viscosity

Viscosity is the result of two phenomena: (a) intermolecular cohesive forces and (b) momentum transfer between flowing strata caused by molecular agitation perpendicular to the direction of motion. Between adjacent strata of a flowing fluid a shearing stress results that is directly proportional to the velocity gradient. (Figure 2-10). *Viscosity is often defined as resistance to flow.*

The relationship of these forces is shown in. Equation 2-8.

(Eq. 2-8) $$g_c \mathrm{T} = \mu \frac{dv}{dy}$$

Where:

	g_c	= *dimensional constant*
	T	= *unit shearing stress between adjacent layers of fluid*
	$\frac{dv}{dy}$	= *velocity gradient*
	μ	= *proportionality constant (viscosity)*

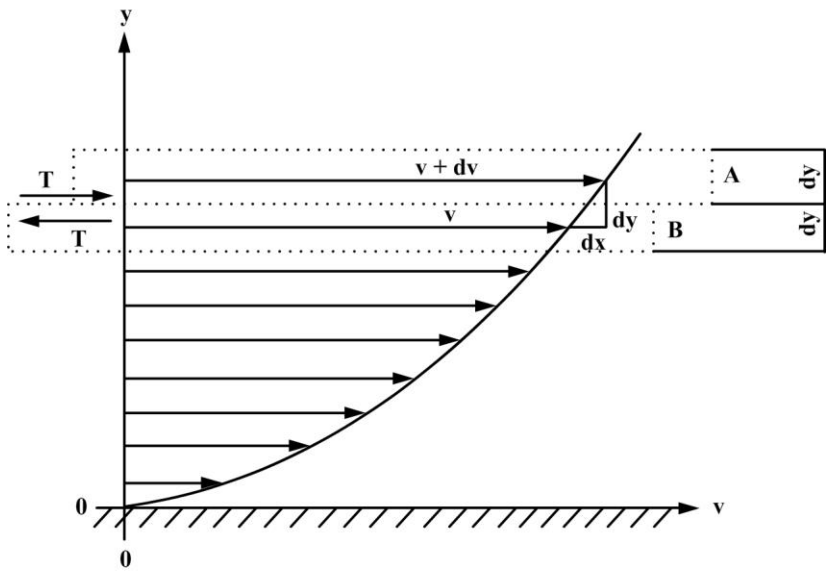

Figure 2-10. Velocity gradient.

The proportionality constant, μ, is called the coefficient of viscosity, or merely, *viscosity*. It should be noted that the pressure does not appear in Equation 2-8, indicating that the shear (T) and the viscosity (μ) are independent of pressure. (Viscosity actually increases very slightly with pressure, but this variation is negligible in most engineering problems.)

Kinematic Viscosity

Kinematic viscosity is defined according to the following relationship:

(Eq. 2-9) $$v = \frac{\mu}{\rho}$$

Where:

	v	= *kinematic viscosity*
	μ	= *viscosity of the gas*
	ρ	= *density of the gas (note the absence of dimensions of force).*

Liquid Viscosity versus Gas Viscosity

Liquid Viscosity

In a liquid, transfer of momentum between strata having different velocities is small, compared to the cohesive forces between the molecules. Hence, shear stress (T) is predominantly the result of intermolecular cohesion. Because forces of cohesion decrease with an increase in temperature, the shear stress decreases with an increase in temperature. Equation 2-8 shows that shear stress is directly proportional to the viscosity. Therefore, liquid viscosity decreases when the temperature increases.

Gas Viscosity

In a gas, the molecules are too far apart for intermolecular cohesion to be effective. Thus, shear stress is predominantly the 'result of an exchange of momentum between flowing strata caused by molecular activity. Because molecular activity increases with temperature increases, the shear stress increases with a rise in the temperature. Therefore, gas viscosity is increased when the temperature increases.

Determination of Viscosity of Gases

The viscosity of a gas may be found accurately from the following formula:

(Eq. 2-10)

$$\frac{\mu}{\mu^\circ} = \left(\frac{T}{273.1}\right)^n$$

Where:

μ = *viscosity at temperature T* (K)

μ° = *viscosity at 0°C and prevailing pressure*

T = *absolute prevailing temperature (*K*)*

n = *an empirical exponent (n* = 0.768 *for air).*

The viscosity of air and other gases at various temperatures and at a pressure of 1 atmosphere can be determined from the nomograph in Figures 2-11 and 2-12, or from Equation 2-10. The unit of the viscosity coefficient is the poise: 1 poise = gm/cm•sec. A centipoise (cp) is equal to 10^{-2} poise.

Reynold's Number

Reynolds Number

In 1883, Osborne Reynolds experimented with laminar and turbulent flow. His basic experiment was to inject a dye in a small section of fluid flowing in a tube and find where the flow changed from laminar to turbulent flow. He found that the flow could change abruptly and it could be predicted based on the ratio of inertial forces to viscous forces in a flowing fluid. A typical inertial force per unit volume of fluid is $\rho v^2/L$. A typical viscous force per unit volume of fluid is $\mu v/L^2$.

The first expression divided by the second provides the dimensionless ratio known as the Reynolds Number:
(1-20)

$$Re = \frac{Lv\rho}{\mu}$$

Where

Re = Reynolds Number
L = characteristics system dimension
v = fluid velocity
ρ = fluid density
μ = fluid viscosity

The linear dimension, L, is a length characteristic of the flow system. It is equal to four times the mean hydraulic radius, which is the cross-sectional area divided by the wetted perimeter. Thus, for a circular pipe, L is the pipe diameter, D, and the Reynolds Number (sometimes termed the *Flow Reynolds Number*) takes the form:

(1-21)

$$Re = \frac{Dv\rho}{\mu}$$

Reynolds Number in this form is used to distinguish between laminar and turbulent flow. In *laminar flow*, the fluid is constrained to motion in layers, or laminae, by the action of viscosity. These layers of fluid move in parallel paths that remain distinct from one another (i.e. no mixing of molecules between layers). Laminar flow occurs when the Reynolds Number is less than about 2,000. In *turbulent flow*, the fluid is not restricted to parallel paths but moves forward in a random, chaotic manner. Fully turbulent flow occurs when the Reynolds Number is greater than about 3,000. Between Reynolds Numbers of 2,000 and 3,000, the flow may be laminar or turbulent, depending on the flow system conditions. Pipe or duct vibration, for example, can cause turbulent conditions to exist at Reynolds Numbers significantly below 3,000.

Another form of Reynolds Number is the *Particle Reynolds Number*. Here, the characteristic system dimension is the particle diameter, d_p, and the velocity, v_p, describes the particle velocity relative to the gas stream:

(1-22)

$$Re_p = \frac{D_p v_p \rho}{\mu}$$

Particle Reynolds Number is used to characterize flow conditions when particles move through or with a flowing fluid. Particle Reynolds Numbers less than about one indicate laminar conditions and define what is commonly termed the *Stokes Region*.

Values over about 1,000 indicate turbulent conditions and define what is commonly termed the *Newton Region*. Particle Reynolds Numbers between 1 and 1,000 indicate transitional conditions. Most particle motion in air pollution control devices occurs in the Stokes and Transitional Regions.

Reynolds number determination for flow conditions and particle behavior may be important considerations when designing air sampling equipment and instrumentation, but is generally not of concern if the equipment is being utilized within its design parameters. For example, an impactor may be designed to capture particles which are < 2.5 um, as an aerodynamic diameter, at a flow rate of 16.7 liters per minute. If the flow rate differs appreciably from the design flow rate the size of the particles being capture will be altered as well. The concept of flow and particle Reynolds numbers are also important to the design and evaluation of air pollution control equipment and are discussed in more detail in EPA Course 413, *Control of Particulate Emissions*. The "flow" Reynolds Number as it relates to cyclonic flow determinations is a topic of discussion in EPA Course 450, *Source Sampling for Particulate Emissions*.

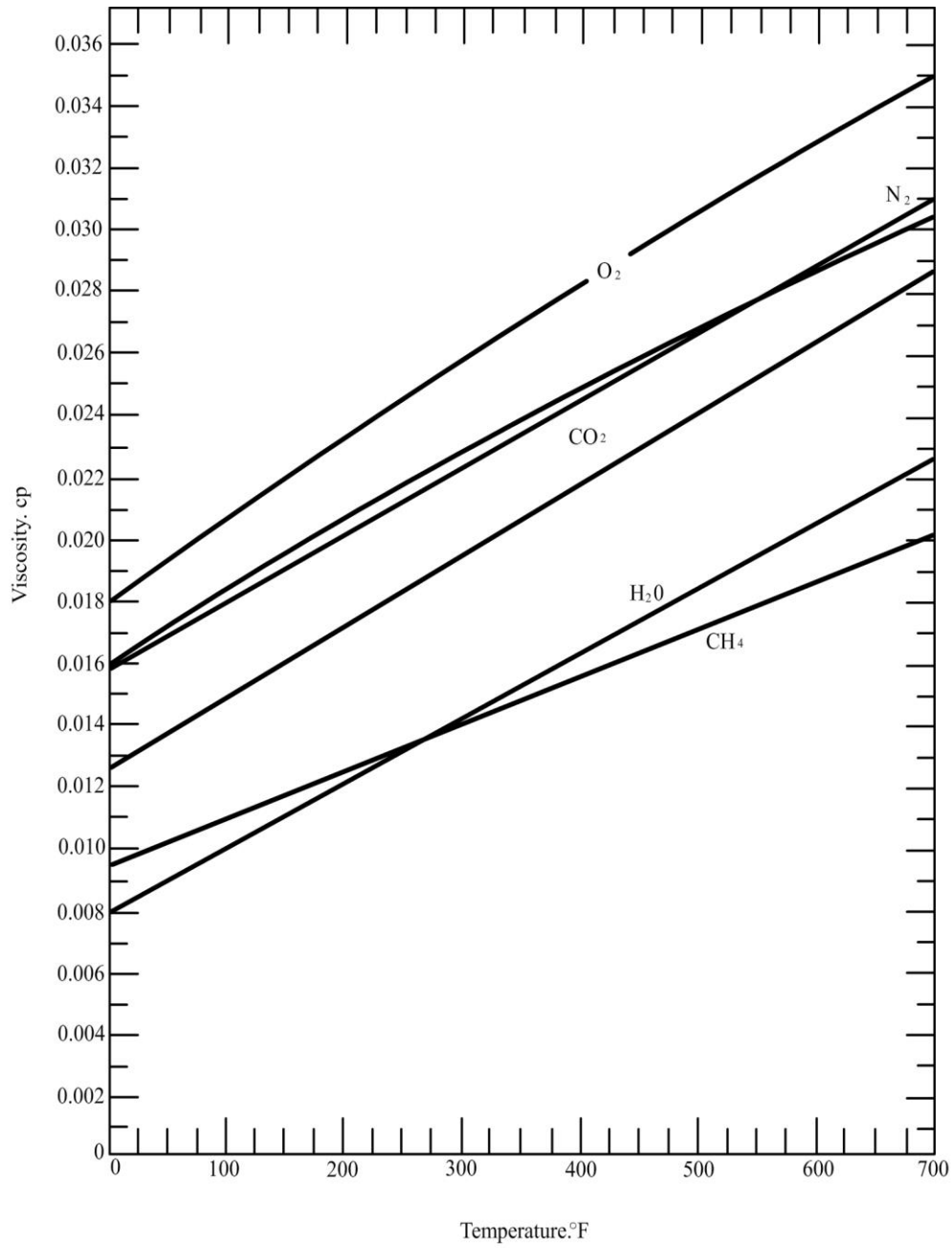

Figure 2-12. Viscosity nomograph of various gases at 1 atmosphere.

Summary of Useful Equations

Temperature

$$°C = (°F - 32)/1.8$$
$$°F = 1.8°C + 32$$

$$K = °C + 273$$

Where: °F = *degrees Fahrenheit*
°C = *degrees Celsius*
K = *degrees Kelvin*

Pressure

$$P = P_b + p_g$$

$$P = \rho_f \left(\frac{g}{g_c} \right) h$$

$$\rho_{f(1)} h_{f(1)} = \rho_{f(2)} h_{f(2)}$$

$$1\, std\ atm = 29.92 \text{ in. Hg}$$
$$= 760 \text{ mm Hg}$$

Where: P = *absolute pressure*
p = *pressure*
ρ = *density*
h = *pressure-head or height*
g = *gravitational acceleration*
g_c = *dimensional constant*

Subscripts
g = *gauge*
f = *fluid*
b = *barometric or atmospheric*

Ideal Gas Law

$$PV = nRT$$

$$PV = \frac{m}{M} RT$$

$$R = \left(\frac{0.08205 \,(\text{liters})(atm)}{(\text{g - } mole)(\text{K})} \right)$$
$$= \frac{62.4 \,(\text{liters})(\text{mm Hg})}{(\text{g - } mole)(\text{K})}$$

1 g-*mole* = 22.414 liters at 273 K and 760 mm Hg (molar volume)

Where: P = *absolute pressure*
V = *volume*
m = *mass*
M = *molecular weight*
R =*gas constant*

	T	= *absolute temperature*
	n	= *number of g-moles of a gas.*

Gas Density

$$\rho = \frac{PM}{RT}$$

Where:	ρ	= *density*
	P	= *absolute pressure*
	R	= *gas constant*
	T	= *absolute temperature*
	M	= *molecular weight.*

Viscosity, μ

$$1\,cp = 6.72 \times 10^{-4}\ \frac{\mathrm{lb_m}}{\mathrm{ft \cdot sec}}$$

$$1\ poise = 1\frac{\mathrm{g}}{\mathrm{cm \cdot sec}}$$

$$1\,cp = 10^{-2}\ \mathrm{poise}$$

Reynold's Number

$$N_{\mathrm{Re}} = \frac{Lv\rho}{\mu} = \frac{inertial\ \ force}{viscous\ force}$$

Where:	ρ	= *density of the fluid (mass/volume)*
	r	= *velocity of the fluid*
	g_c	= *dimensional constant*
	L	= *a linear dimension*
	μ	= *viscosity of the fluid*
	N_{Re}	= *Reynold's Number*

Units of Measurements

Recommended Units

At the present time, air pollution personnel are confronted with a multitude of confusing and conflicting units of expression. A search through the literature has shown a wide variation in the methods of reporting data. Many of the units of expression are carry-overs from other fields, such as water pollution studies and industrial hygiene surveys. While these methods of expression are correct, their application to air pollution studies is often misleading. This section of the manual

covers the units presently being used and those recommended for the more commonly measured air pollution parameters.

The recommended units were selected so that the reported values would be small whole numbers in the metric system. If possible, the reported units should be the same as those that are actually measured. For example, weight should be reported in grams or milligrams, and volume in cubic meters. The measured value should never be multiplied by large numbers to extrapolate to extremely large areas or volumes. If this is done, the resulting values are misleading. For example: To report particulate fallout on a weight per square mile basis, the area actually sampled, which is about 1 square foot, would have to be extrapolated to a square mile by multiplying the measured results by almost 28,000,000. Reporting the results on the basis of a square mile is misleading, because we are saying that the 1 square foot that we sampled is representative of a square mile surrounding this sampling site. This we know, in most cases, is not true.

When reporting results, the type of sampling instrument should be described, and when volumes of air are sampled, the temperature and pressure at the time of the sampling should be reported.

Table 2-1. Measurement units.

Parameter	Units in use	Unit recommended	Typical range
Particle fallout	Tons per square mile per month Tons per square mile per year Pounds per acre per month Pounds per acre per year Pounds per thousand square feet per month Ounces per square foot per month Grams per square foot per month Grams per square meter per month Kilograms. per square kilometer per month Grams per month per 4-inch or 6-inch jar Milligrams per square inch per month Milligrams per square centimeter per time interval	$mg/cm^2/mo$ (or yr)	0.5 to 135 $mg/cm^2/mo$
Outdoor airborne particulate matter	Milligrams per cubic meter Parts per million by weight Grams per cubic foot Grams per cubic meter Micrograms per cubic meter Micrograms per cubic foot Pounds per thousand cubic feet	$\mu g/m^3$ (std)	10 to 5000 $\mu g/m^3$ as TSP 30 to 140 $\mu g/m^3$ as PM10 [1] 5 to 20 $\mu g/m^3$ as PM2.5 [1]

Gaseous materials	Milligrams per cubic meter Micrograms per cubic meter Micrograms per liter Parts per million by volume Parts per hundred million Parts per billion by volume Parts per trillion by volume Ounces per cubic foot Pounds per cubic foot Grams per cubic foot Pounds per thousand cubic feet	ppm or ppb by volume or ug/m^3 (std)	Parts per trillion to parts per million – –
Standard conditions for reporting gas volumes	760 millimeters Hg pressure and 20°C 760 millimeters Hg pressure and 0°C 760 millimeters Hg pressure and 65 °F 760 millimeters Hg pressure and 25°C 700 millimeters Hg pressure and 0°C 700 millimeter Hg pressure and 20°C 30 inches of mercury pressure and 65°F	760 mm Hg and 25°C	– –
Particle counting	Number per cubic meter of gas Number per liter of gas Number per cubic centimeter of gas Number per cubic foot of gas	Number of particles/m^3 of gas	10 million and above particles/m^3
Particle count in sedimentation devices (horizontal and vertical)	– –	Number of particles/cm^2/mo (or yr)	– –

Temperature	Degrees Celsius Degree Fahrenheit	°C	_ _
Time	12:00 a.m. to 12:00 p.m. 0000 to 2400	0000 to 2400 (military time)	_ _
Pressure	Atmospheric pressure Atmospheres Millimeters of mercury Inches of mercury Sampling pressure Millimeters of mercury Inches of mercury Millimeters of water Inches of water	mm Hg	_ _
Sampling rates	Cubic meters per second Cubic meters per minute Cubic feet per second Cubic feet per minute Liters per second Liters per minute Cubic centimeters per second Cubic centimeters per minute	m^3/min. liters per minute	ℓ/min to 3 m^3/min

Visibility	Miles and fractions of a mile Kilometers and fractions of a kilometer	km	_ _

Note 1: Based on National Trends data for PM10 & PM2.5.

Conversion Problems

Sample Gas Problem

Discussion:

The expression parts per million is without dimensions, i.e., no units of weight or volume are specifically designed. Using the format of other units, the expression may be written:

$$\frac{\text{parts}}{\text{million parts}}$$

"Parts" are not defined. If cubic centimeters replace parts, we obtain:

$$\frac{\text{cubic centimeters}}{\text{million cubic centimeters}}$$

Similarly, we might write pounds per million pounds, tons per million tons, or liters per million liters. In each expression, identical units of weight or volume appear in both the numerator and denominator and may be cancelled out, leaving a dimensionless term.

An analog of parts per million is the more familiar term "percent." Percent can be written:

$$\frac{\text{parts}}{\text{hundred parts}}$$

To convert from parts per million by volume, ppm, ($\mu\ell/\ell$), it is necessary to know the molar volume at the given temperature and pressure and the molecular

weight of the pollutant.

At 25°C and 760 mm Hg, one mole of any gas occupies 24.46 liters.

Convert the following:

2.5 ppm by volume of SO_2 was reported as the atmospheric concentration.

a. What is this concentration in micrograms (μg) per cubic meter (m^3) at 25°C and 760 mm Hg?

b. What is the concentration in $\mu g/m^3$ at 37°C and 752 mm Hg?

Solution:

Let parts per million equal μℓ/ℓ then 2.5 ppm = 2.5 $^{\mu\ell}/\ell$. The molar volume at 25° and 760 mm Hg is 24.46ℓ, and the molecular weight of SO_2 = is 64.1 g/mole.

(a)

$$\frac{2.5\mu\ell}{\ell}\times\frac{1\mu\text{mole}^*}{24.46\mu\ell}\times\frac{64.1\mu\text{g}}{\mu\text{mole}}\times\frac{1000\ell}{\text{m}^3}=6.5\times10^3\,\frac{\mu\text{g}}{\text{m}^3}\text{ at STP}$$

(b)

$$(24.46\mu\ell)\left(\frac{310\text{ K}}{298\text{ K}}\right)\frac{760\text{ mm Hg}}{752\text{ mm Hg}}=25.73\mu\ell$$

$$\frac{2.5\mu\ell}{\ell}\times\frac{1\mu\text{mole}}{25.73\mu\ell}\times\frac{64.1\mu\text{g}}{\mu\text{mole}}\times\frac{1000\ell}{\text{m}^3}=6.2\times10^3\,\frac{\mu\text{g}}{\text{m}^3}\text{ at 37°C, 752 mm Hg}$$

This sample problem also points out the need for reporting temperature and pressure when the results are presented on a weight-to-volume basis.

*Since, at STP, 1 mole of a gas occupies 24.46 liters, 1 μmole = 24.46 $\mu\ell$.

Problems

1. Convert the following:
   a. 68°F – °C (answer 20°C)
   b. 28°C – K. (answer 301 K)
   c. 29.03 in. Hg – mm Hg (answer 737.3 mm Hg)
2. An ideal gas occupies a volume of 2000 mℓ at 700 mm Hg and 20°C. What is the volume of the gas at STP? (answer 1874 mℓ)
3. If a concentration of carbon monoxide (CO) is noted as 10 ppm, what is this concentration in terms of $\mu g/m^3$ at STP? (CO = 28 g/mole) (answer 11,440 $\mu g/m^3$, 11.4 mg/m^3)
4. Ambient air was sampled at a rate of 2.25 liters per minute for a period of 3.25 hours at 19°C, 748 mm Hg. What volume of air was sampled at STP? (answer 441 ℓ)
5. Convert 1000 $\mu g/m^3$ SO_2 at STP to ppm. (SO_2= 64 g/mole) (answer 0.38 ppm)

Tables to use in this task appear in Appendix A3 of this manual.

Significant Figures and Rounding Off

In most cases, rather than using paper and pencil, you will be performing math calculations using a handheld calculator, a personal computer, or a mainframe computer. However, whether you use an electronic tool or paper and pencil, you are often required to make decisions based on certain basic rules and principles of mathematics. In addition, when a calculator or computer is used, you have the additional responsibility for ensuring that the tool (hardware or software) is, in fact, providing accurate and reliable results.

In this initial lesson some of the most basic mathematical concepts are reviewed. These concepts, though basic and supposedly simple, often lead to periods of frustration and hair pulling when ignored or overlooked. The basics to be presented in this lesson deal with determining how many figures to keep (where to truncate) and how or when to round off.

The number of digits displayed as the answer on most calculators and computers is governed by the physical properties of the instrument (e.g., many handheld calculators display only 10 digits).
Determining how many digits to keep (where to truncate, or which digits to throwaway), and when and how to round are decisions that you must make. On the next page you will be asked to solve 12 problems requiring you to determine which digits to keep and when to round.

Using your calculator, provide your answers in two forms, the *complete* answer, and the *corrected* answer. In the first column (Complete) supply the complete answer obtained by performing the required function (probably an answer with 10 digits on many calculators). In the second column (Corrected), supply the answer retaining the *correct* number of digits, rounded where necessary.

Introductory Problems

Problem	Complete	Corrected
3.5+2.075=		
3.49-2.0075=		
2.0 x 307 =		
2.49 x 3.07 =		
2.074 x 4.700 =		
4.1 x 3.29875 =		
50+3.0069=		
9.4+334=		
9.4000 + 0.02 =		
0.052 + 0.0026 =		

0.00791 + 0.52 =		
0.0025 x 0.00025 =		

Now, compare your answers with those provided on page 2-34.

Approximate Numbers

Any number may be classified as exact or as approximate. An exact number is derived from the use of specific numbering systems and arithmetic rules. (For example, 12 is an exact number.) Approximate numbers are derived from measurements and calculations where rounding has been, or may he, applied.

When it is stated that 12 eggs are consumed by five people or that each person consumed 2.4 eggs, 2.4 eggs represents an approximate number. Even if the eggs were scrambled, we have no way of ensuring that each person consumed exactly 2.4 eggs.

With air pollution problems, we deal primarily with measurements. Therefore, we are dealing primarily with approximate numbers. Another way of considering approximate numbers is to acknowledge that an approximate number has some degree of error associated with it. Since the numbers being used are approximate and contain some degree of error at the outset, care must be taken to avoid introducing any more error into problems and their solutions.

The following general rules are useful in remembering the rules and calculating the values associated with approximate numbers.

Rule 1 *(General)*

In most cases, mathematical rules governing the results of an addition or subtraction operation are quite similar to one another, if not the same. Also, the rules governing the results of a multiplication or division operation are similar to one another, or the same. But the rules governing the results of addition and subtraction operations are generally quite different from the rules governing the results of multiplication and division operations.

Rule 2 *(General)*

When performing calculations with approximate numbers carry as many *digits as possible until the final result is calculated. Once the final result is calculated apply the appropriate rules for truncating and rounding.* Since the rule for *rounding* approximate numbers applies to addition, subtraction, multiplication, and division, and is easy to remember, we will look at it first.

Rounding Approximate Numbers

For the moment, we will not concern ourselves with where and how to truncate numbers. We will simply assume that the appropriate number of digits to be retained are givens in the following examples. When truncating (removing final,

unwanted digits), rounding is normally applied to the last digit to be kept.

Rule for Rounding Approximate Numbers

If the value of the first digit to be discarded is less than 5, *retain the last kept digit with* no *change. If the value of the first digit to be discarded is* 5 *or greater, increase the last kept digit's value by one.*

Example: 25.0847
Assume only the first two decimal places are to be kept (the 4 and 7 are to be dropped).
Round to 25.08. Since the first digit to be discarded (4) is less than 5, the 8 is not rounded up.

Example: 25.0867
Assume only the first two decimal places are to be kept (the 5 and 7 are to be dropped).
Round to 25.09. Since the first digit to be discarded (6) is 5 or more, the 8 is rounded up to 9.

Adding and Subtracting Approximate Numbers

When adding or subtracting approximate numbers, a rule based upon precision determines how many digits are kept. In general, precision relates to the decimal significance of a number. When a measurement is given as 1.005 cm, we can say that the number is precise to the *thousandth* of a centimeter. If the decimal is removed (1005 cm) we have a number that is precise to *thousands* of centimeters. You may make a measurement in gallons or liters. Although a gallon or a liter may represent an exact quantity, the measuring instruments that are used are capable of producing approximations only. Using a standard graduated flask as an example, can you determine whether there is exactly one liter? Likely, not. In fact you would be hard pressed to verify that there was a liter to within ±1/1O of a liter. Therefore, depending upon the instruments used, the precision of a given measurement may vary.

If a measurement is given to us as 16.0 L, the zero after the decimal indicates that the measurement is precise to within 1/10 L. Given a measurement of 16.00 L, we have precision to 1/100 L. In short, the digits following the decimal indicate how precise the measurement is. Precision is used to determine where to truncate when approximate numbers are added or subtracted.

Truncating Approximate Numbers Following Addition or Subtraction

When approximate numbers are added or subtracted, the results are expressed in terms of the least precise number in the problem. Since this is a relatively simple rule to master, just one problem will be used to illustrate it.

Calculate the following and express the result in precise terms:

6.04 L + 2.8 L - 4.173 L = 4.7 L

The complete result is 4.667 L. The answer follows the rule of precision. The expressions in the problem have two, one, and three decimal places respectively. The least precise number (least decimal places) in the problem is 2.8, a value carried only to the tenths position. Therefore, the answer must be calculated to the tenths position only. Thus the correct answer is 4.7 L. (The last 6 and the 7 are dropped from 4.667 L, and the first 6 is rounded up to provide 4.7 L.)

Intro Problems I and 2 represent addition and subtraction of approximate numbers.

Problem 1: 3.5 + 2.075 =5.575 =5.6

The least precise number (3.5) is provided to one decimal place. The answer must therefore contain only one decimal and the second 5 is rounded up to 6.

Problem 2: 3.49 - 2.0075 =1.4825 =1.48

Two decimal places are represented by the least precise number (3.49). The answer is given to two decimals and the 8 is not rounded up.

Multiplying and Dividing Approximate Numbers

In multiplication and division of approximate numbers, finding the number of significant digits is used to determine how many digits to keep (where to truncate). We must first understand significant digits in order to determine the correct number of digits to keep or remove in multiplication and division problems.

Significant Digits

Generally, the digits 1 through 9 *are considered to be significant.* Thus, the numbers 123, 53,7492, and 5 contain three, two, four, and one significant digits respectively.

The digit 0 must be considered separately.

Zeros are significant when they occur between significant digits. In the following examples, all zeros are significant: 10001, 402, 1.1OO1, 50.09 (five, three, four, and four significant digits respectively).

Zeros are not significant when they are used as place holders. When used as a place holder, a zero simply identifies where a decimal is located. For example, each of the following numbers has only one significant digit: 1000, 500, 60, 0.09, and 0.0002. In the numbers 1200, 540, and 0.0032, there are two significant digits, and the zeros are not significant. W*hen zeros follow a decimal and are preceded by a significant*

digit the zeros are significant. In the following examples, all zeros are significant: l.oo, 15.0, 4.1000, 1.90, 10.002, and 10.0400. In the example 10.002, the zeros are significant because they fall between two significant digits. In the last example, 10.0400, the first two zeros are significant because they fall between two significant digits; the last two zeros are significant because they follow a decimal and are preceded by a significant digit.

Additional illustrations of significant digits are provided in the following chart. The significant digits are underlined.

Examples		Number of Significant Digits
1	123	3
2	12300	3
3	12003	5
4	123.000	6
5	12300.0	6
6	1.0004	5
7	0.0004	1
8	0.005003	4
9	0.005300	4
10	1000.0001	8

Example 1 is pretty easy. There are three non-zero digits and no decimal places; therefore, three significant digits. Example 2 uses two zeros as "place holders" to locate the decimal.
The two zeros are not significant; thus, only three digits are significant. In example 3 the two zeros are not place holders, but part of a five-digit number; hence, five significant digits. Example 4 contains three zeros after the decimal. The zeros follow a decimal and are preceded by three significant digits. (The zeros show precision. which is explained later.)
Example 5 is similar to the previous example. By the presence of the zero after the decimal preceded by significant digits the last zero becomes significant. Now the two zeros before the decimal become significant since they fall between significant digits.

The three zeros in example 6 follow the rule described in examples 4 and 5. The zeros in example 7 establish the position of the decimal only; therefore, they are not significant and the 4 is the lone significant digit. Example 8 uses four zeros. The first two zeros (place holders) are not significant; the other two are significant digits. In example 9, the two trailing zeros are significant because they follow a significant digit that follows a decimal. In the last example, all six zeros are significant since they all fall between significant digits.

Having determined how to count significant digits, we can now apply this information to determine where to truncate the results from multiplying or dividing approximate numbers.

Truncating Approximate Numbers Following Multiplication or Division

When approximate numbers are multiplied or divided the result is expressed as a number having the same number of significant digits as the expression in the problem having the least number of significant digits.

In other words, if you multiply a number having four significant digits by a number having two significant digits, the correct answer will be expressed to two significant digits.

Let's consider a measurement of 200 ft. Not knowing how the measurement was made, we can only know for certain that the measurement represents a distance of 200 ft or greater but less than 300 ft. There is one significant digit, and no matter what computation this measurement enters, the result is good to only one significant digit. Thus, if the problem 200 ft x 13.6 is solved, the complete answer is 2720.0 ft. The two numbers, 200 and 13.6, represent one and three significant digits, respectively. One significant digit is less than three; therefore the correct answer will be rendered to one significant digit. Thus, after rounding, the correct answer is 3000 ft.

If the measurement were made to two significant digits, such as 290 ft, we know that the measurement represents a distance of 290 ft or greater, but less than 300 ft. Again using the measurement, 290 ft x 13.6, the complete result yields 3944.0, and the correct result is 3900 ft. In this case, two significant digits are used (39). Since the first discarded digit is 4, the 39 remains.

Now let's reconsider the answers to Introductory Problems 3 through 12 (on page 2-29) for the problems you worked.

Problem 3: 2.0 x 307 =614 =610

The number 2.0 represents two significant digits since the zero following the decimal follows a significant digit. The number 307 has three significant digits. The *least* number of significant digits is two. Therefore, the 4 in the answer is not significant and it is less than 5, so the answer, properly rounded to two significant digits, is 610. The 4 is dropped.

Problem 4: 2.49 x 3.07 =7.6443 =7.64

There are three significant digits in each number of the problem. The answer, expressed to three significant digits, is 7.64, keeping the decimal and dropping the two non-significant digits (43).

Problem 5: 2.074 x 4.700 =9.7478 =9.748

Again, both numbers in the problem have the same number of significant digits (four). By keeping four significant digits (9.747), truncating the 800 and rounding, we have 9.748.

Problem 6: 4.1 x 3.29875 =13.524875 =14

The numbers in this problem represent two and six significant digits, respectively. Using the fewest significant digits (two) the 13 is kept. By dropping and rounding 0.524875, the correct result is 14.

Problem 7: 50 + 3.0069 = 16.6284213 = 20

The first number, 50, has one significant digit. Therefore, the results will be expressed with the accuracy of one significant digit. The first digit to be truncated is the first 6. So, rounding the 1, the only significant digit becomes 2. The correct answer is then 20.

Problem 8: 9.4 + 3.34 =2.814371257 =2.8

Two significant digits divided by three significant digits means the answer must be calculated to two significant digits. The first digit to be discarded is the 1. The 8 remains unchanged, and the answer is 2.8.

Problem 9: 9.4000 + 0.02 = 470 = 500

The 0.02 in the problem contains the least number of significant digits, one. Remember that zeros used as place holders are not significant digits. Therefore, the 4 in the answer must be retained as the only significant digit. By dropping the 7 and rounding, the 4 becomes 5 and the answer is 500.

Problem 10: 0.052 + =0.0026 =20 =20

Here, both numbers in the problem are comprised of two significant digits. As it happens, the calculated number and the correct number are the same.

Problem 11: 0.00791 + 0.52 =0.015211538 = 0.015

Again, the least number of significant digits is two (0.52). Since the first digit to be discarded is a 2, the 5 remains unchanged and the answer is 0.015.

Problem 12: 0.0025 x 0.00025 = 0.000000625 = 0.00000063

Once again, the least number of significant digits is two. The answer yielded three significant digits, 625. The 5 is discarded, the 2 is rounded up to 3, and the answer is 0.00000063.

Reasonability

The rules for handling approximate numbers are used when there is no overriding rule or condition to be met. In all measurement work, deriving correct answers must be considered in context of the conditions that exist. For example, suppose you are provided numeric data to be processed. The results of your calculations are to be given to a technician who will adjust the airflow through a

system. The calculation and raw results are as follows. What value should you give to the technician?

20.067 cfm x 12.9362 cfm + 18.00782 cfm = 14.41544426 cfm

You probably arrived at the value 14.415 cfm, which is a correct value using the rules provided.

However, if the gauge that the technician uses to adjust the airflow is calibrated in whole cubic feet per minute, what value should you provide? The numbers following the decimal are of no value so you should give the technician the value of 14 cfm. So now things are all set, or are they? With the piece of equipment being used, the manufacturer states that it is better to be on the high side rather than on the low side. So, since the mathematical results are actually more than 14 cfm, you had better give the technician a value of 15 cfm.

At this point you should see that even though 14.415 cfm is the correct mathematical result, the solution must be modified by reasonability to meet the environment and the operating conditions.

Rule* to *Meet the Conditions* of *Reasonability

This rule of common sense may be stated as follows: *Keep only those results that are reasonable (meaningful)* in *the context of the work being done and the equipment being used.*

Remember, generally you are not dealing with exact numbers; you are working with *approximate numbers.* With approximate numbers you must always be careful not to introduce undesirable errors into the final results. When multiple calculations are performed on approximate numbers, errors may become so large that the final results are of no value.

Practice Exercise

Answers are located at the end of this chapter on page 2-47.

1. Give the number of significant digits for each of the following:

a. 3.7 =
b. 2.06 =
c. 17.41 =
d. 0.114 =
e. 0.00134 =
f. 12000.0 =
g. 12000 =
h. 1200.001 =

2. Give the most accurate/precise number for the following calculations:

a. 1.50 + 2.317 =
b. 1.50 - 2.317 =
c. 1500 x 3.94 =
d. 1500+3.94 =
e. 1.500+3.94 =

Introductory Problem Answers

Problem Complete Corrected

Problem		**Complete**	**Corrected**
1.	3.5 + 2.075=	5.575	5.6
2.	3.49 - 2.0075 =	1.4825	1.48
3.	2.0 x 307=	614.0	610
4.	2.49 x 3.07 =	7.6443	7.64
5.	2.074 x 4.700 =	9.7478	9.748
6.	4.1 x 3.29875 =	13.524875	14
7.	50 ÷ 3.0069=	16.6284213	20
8.	9.4 + 3.34=	2.814371257	2.8
9.	9.4000 + 0.02 =	470	500
10.	0.052 + 0.0026 =	20	20
11.	0.00791 + 0.52 =	0.015211538	0.015
12.	0.0025 x 0.00025 =	0.000000625	0.00000063

The numbers given in the preceding chart represent the answers obtained when the correct rules for truncating and rounding are applied.

Definitions

Accuracy	A measure of the closeness of an individual measurement or the average of a number of measurements to the true value. Accuracy includes a combination of random error (precision) and systematic error (bias) components that are due to sampling and analytical operations; the EPA recommends using the terms *"precision"* and *"bias"*, rather than "accuracy," to convey the information usually associated with accuracy. (See, Bias)
Air at EPA Standard Conditions	Air at 25°C and 760 mm Hg (29.92 in. Hg).
Air Pollution	The presence of unwanted material in the air. The term "unwanted material" here refers to material concentrations present for a sufficient time and under circumstances to interfere significantly with comfort, health, or welfare of persons, or with the full use and enjoyment of property.
Air Toxics	Also known as toxic air pollutants or hazardous air pollutants are those pollutants known to or suspected of causing cancer or other serious health problems. Health concerns may be associated with both short and long term exposures to these pollutants. Many are known to have respiratory, neurological, immune or reproductive effects, particularly for more susceptible sensitive populations such as children and the elderly. (See also, hazardous air pollutants).
Aspirator	Any apparatus, such as a squeeze bulb, fan, pump, or venturi, that produces a movement of a fluid by suction.
Atmosphere, The	The whole mass of air surrounding the earth and being composed largely of oxygen and nitrogen.
Atmosphere, An	A specific gaseous mass, occurring either naturally or artificially, containing any number of constitutents and in any proportion.
Bias	The systematic or persistent distortion of a measurement process, which causes errors in one direction (i.e., the expected sample measurement is different from the sample's true value).
Breathing Zone	That location in the atmosphere at which persons breathe.

Chimney Effect	A phenomenon consisting of a vertical movement of a localized mass of air or other gases due to temperature/pressure differences.
Collection Efficiency	The, percentage of a specified substance retained by a gas cleaning or sampling device.
Collector	A device for removing and retaining contaminants from air or other gases. Usually this term is applied to cleaning devices in exhaust systems.
Cloud	A visible dispersion occupying a discrete portion of space, with apparent boundaries.
Condensate	Liquid or solid matter formed by condensation from the vapor phase. In sampling, the term is applied to the components of an atmosphere that have been isolated by simple cooling.
Condensation	The process of converting a material in the gaseous phase to a liquid or solid state by decreasing temperature, by increasing pressure, or both. Usually in air sampling only cooling is used.
Condensoid	The particles of a dispersion formed by condensation.
Contaminant	Unwanted material.
Count Median Size	A measurement of particle size for samples of particulate matter, consisting of that diameter of particle such that one half of the number of particles is larger and half is smaller.
Cryogenic Sampling	See Sampling, Condensation.
Density	The mass per unit volume of substance.
Diffusion, Molecular	A process of spontaneous intermixing of different substances, attributable to molecular motion and tending to produce uniformity of concentration.
Dispersion	The most general term for a system consisting of particulate matter suspended in air or other gases.
Dispersoid	The particles of a dispersion.
Diurnal	The term means recurring daily. Applied to (variations in concentration of) air contaminants, diurnal indicates variations following a distinctive pattern and recurring from day to day.
Dust	A loose term applied to solid particles predominantly larger than colloidal and capable of temporary suspension in air or other gases. Dusts do not tend to flocculate except under electrostatic forces; they do not diffuse but settle under the influence of gravity. Derivation from larger masses through the application of physical force is usually implied.
Dust Fall	See Particle Fall.

Dust Loading	An engineering term for "dust concentration," usually applied to the contents of collection ducts and the emission from stacks.
Droplet	A small liquid particle of such size and density as to fall under still conditions, but which may remain suspended under turbulent conditions.
Efficiency	The ratio of attained performance to absolute performance, commonly expressed in percent.
Efficiency, Fractional	The mean collection efficiency for specific size fractions of a contaminant. Commonly this term has been applied to the performance of air cleaning equipment toward particulate matter in various size ranges.
Ejector	A device that uses a fluid under pressure, such as steam, air, or water, to move another fluid by developing suction. Suction is developed by discharging the fluid under pressure through a venturi.
Emissions	The total of substances discharged into the air from a stack vent, or other discrete source.
Emission Mixture	The total mixture in the outside atmosphere of emission from all sources.
Flocculation	Synonymous with agglomeration.
Flowmeter	An instrument for measuring the rate of flow of a fluid moving through a pipe or duct system. The instrument is calibrated to give volume or mass rate of flow.
Fly Ash	The finely divided particles of ash entrained in flue gases arising from the combustion of fuel. The particles of ash may contain incompletely burned fuel. The term has been applied predominantly to the gas-born ash from boilers with spreader stoker, underfeed stoker, and pulverized fuel (coal) firing.
Fog	A loose term applied to visible aerosols in which the dispersed phase is liquid. Formation by condensation is usually implied; in meteorology, a dispersion of water or ice.
Freezing Out	See Sampling, Condensation.
Fume	Properly, the solid particles generated by condensation from the gaseous state, generally after volatilization from melted substances, and often accompanied by a chemical reaction such as oxidation. Fumes flocculate and sometimes coalesce. Popularly, the term is used in reference to any of all types of contaminant, and in many laws or regulations, with the added qualification that the contaminant have some unwanted action.

Gas	One of the three states of aggregation of matter, having neither independent shape nor volume and tending to expand indefinitely.
Grab Sample	See Sampling, Instantaneous.
Hazardous Air Pollutants	Air pollutants, as defined in the Clean Air Act, may reasonably be expected to cause or contribute to irreversible illness or death. Such pollutants include asbestos, beryllium, mercury, benzene, coke oven emissions, radionuclides, and vinyl chloride. A total of 188 hazardous air pollutants are listed in section 112(b) of the Clean Air Act, as amended in 1990. (See also, Air Toxics)
Impaction	A forcible contact of particles of matter, a term often used synonymously with impingement.
Impactor	A sampling device that employs the principle of impaction (impingement). The "cascade impactor" refers to a specific instrument employing several impactions in series to collect successively smaller sizes of particles.
Impingement	The act of bringing matter forcibly in contact. As used in air sampling, impingement refers to a process for the collection of particulate matter in which the gas being sampled is directed forcibly against a surface.
Impingement, Dry	The process of impingement carried out so that particulate matter carried in the gas stream is retained upon the surface against which the stream is directed. The collecting surface may be treated with a film of adhesive.
Impingement, Wet	The process of impingement carried out within a body of liquid, the latter serving to retain the particulate matter.
Impinger	Broadly, a sampling instrument employing impingement for the collection of particulate matter. Commonly, this term is applied to specific instruments, the "midget" and "standard" impinger.
Impinger, Midget	A specific instrument employing wet impingement, using a liquid volume of 10 ml and a gas flow of 0.1 cu. ft. per min.

2-29

Impinger, Standard	A specific instrument employing wet impingement, using a liquid volume of 75 ml and a gas flow of 1 cu. ft. per min. (e.g. Greenberg-Smith Impinger).

Isokinetic	A term describing a condition of sampling in which the flow of gas into the sampling device (at the opening or face of the inlet) has the same flow rate and direction as the gas stream being sampled.
Mass Concentration	Concentration expressed in terms of mass of substance per unit volume of gas or liquid.
Mass Median Size	A measurement of particle size for samples of particulate matter, consisting of that diameter such that the mass of all larger particles is equal to the mass of all smaller particles.
Mist	A loose term applied to dispersions of liquid particles, the dispersion being of low concentration and the particles of large size. In meteorology, a light dispersion of water droplets of sufficient size to be falling.
Odor	That property of a substance affecting the sense of smell; any smell; scent; perfume.
Odor Concentration	The number of unit volumes that a unit volume of sample will occupy when diluted to the odor threshold.
Odor Unit	Unit volume of air at the odor threshold.
Odorant	Odorous substance.
Orifice Meter	A flowmeter, employing as the measure of flow rate the difference between the pressures measured on the upstream and downstream sides of the orifice (that is, the pressure differential across the orifice) in the conveying pipe or duct.
Particle	A small discrete mass of solid or liquid matter.
Particle Concentration	Concentration expressed in terms of number of particles per unit volume of air or other gas. (Note: On expressing particle concentration, the method of determining the concentration should be stated.)
Particle Fall	A measurement of air contamination consisting of the mass rate at which solid particles deposit from the atmosphere. A term used in the same sense as the older terms Dust Fall and Soot Fall but without any implication as to nature and source of the particles.
Particle Size	An expression for the size of liquid or solid particles expressed as the average or equivalent diameter.
Particle Size Distribution	The relative percentage by weight or number of each of the different size fractions of particulate matter.

Precipitation, Electrostatic	A process consisting of the separation of particulate matter from air or other gases under the influence of an electrostatic field.
Precipitation, Meteorological	The precipitation of water from the atmosphere in the form of hail, mist, rain, sleet, and snow. Deposits of dew, fog, and frost are excluded.
Precipitation, Thermal	A process consisting of the separation of particulate matter from air and other gases under the influence of a relatively large temperature gradient extending over a short distance. In the "Thermal Precipitator" (a sampling instrument), the air or gas is drawn through a narrow chamber across which extends a heated wire, particulate matter being deposited upon the adjacent collecting surface.
Precipitation, Ultrasonic	A process consisting of the separation of particulate matter from air and other gases following agglomeration induced by an ultrasonic field.
Precipitator, Electrostatic	Apparatus employing electrostatic precipitation for the separation of particles from a gas stream. The apparatus may be designed either for sampling or for cleaning large volumes of gas.
Precision	The degree of agreement of repeated measurements of the same property, expressed in terms of dispersion of test results about the mean result obtained by repetitive testing of a homogenous sample under specified conditions. The precision of a method is expressed quantitatively as the standard deviation computed from the results of a series of controlled determinations.
Pressure Static	The pressure of a fluid at rest, or in motion, exerted perpendicularly to the direction of flow.
Pressure, Velocity	That pressure caused by and related to the velocity of the flow of fluid; a measure of the kinetic energy of the fluid.
Pressure, Total	The pressure representing the sum of static pressure and velocity pressure at the point of measurement.
Pressure, Gauge	The difference in pressure existing within a system and that of the atmosphere. Zero gauge pressure is equal to atmospheric pressure.
Probe	A tube used for sampling or for measuring pressures at a distance from the actual collection or measuring apparatus. It is commonly used for reaching inside stacks and ducts.

Rotameter	A device, based on the principle of Stoke's Law, for measuring rate of fluid flow. It consists of a tapered vertical tube having a circular cross-section, and containing a float that is free to move in a vertical path to a height dependent upon the rate of fluid flow upward through the tube.
Sample, Integrated	A sample obtained over a period of time with (1) the collected atmosphere being retained in a single vessel, or (2) with a separated component accumulating into a single whole. Examples are particle sampling in which all the particles separated from the air is accumulated in one mass of fluid; the absorption of acid gas in an alkaline solution; and collection of air in a plastic bag. Such a sample does not reflect variations in concentration during the period of sampling.
Sample, Continuous	Withdrawal of a portion of the atmosphere over a period of time with continuous analysis or with separation of the desired material continuously and in a "linear' form. Examples are continuous withdrawal of the atmosphere accompanied by absorption of a component in a flowing stream of absorbent or by filtration on a moving strip or paper. Such a sample may be obtained with a considerable concentration of the contaminant, but it still indicates fluctuations in concentration that occur during the period of sampling.
Sampling	A process consisting of the withdrawal or isolation of a fractional part of a whole. In air or gas analysis, the separation of a portion of an ambient atmosphere with or without the simultaneous isolation of selected components.
Sampling, Condensation	A process consisting of the collection of one or several components of a gaseous mixture by simple cooling of the gas stream in a device that retains the condensate.
Sampling, Continuous	Sampling without interruptions throughout an operation or for a predetermined time.
Sampling, Instantaneous	Obtaining a sample of an atmosphere in a very short period of time such that this sampling time is insignificant in comparison with the duration of the operation or the period being studied.
Sampling, Intermittent	Sampling successively for limited periods of time throughout an operation or for a predetermined period of time. The duration of sampling periods and of the intervals between are not necessarily regular and are not specified.

Series Collection	An operation involving the use of two or more collectors joined in a series.
Settling Velocity	The terminal rate of fall of a particle through a fluid as induced by gravity or other external force; the rate at which frictional drag balances the accelerating force (or the external force).
Smog	A term derived from smoke and fog, applied to extensive atmospheric contamination by aerosols which arise partly through natural processes and partly from the activities of human subjects. Now sometimes used loosely for any contamination of air. (See also, Photochemical Smog)
Smog, Photochemical	Air contamination caused by chemical reactions of pollutants formed primarily by the action of sunlight on oxides of nitrogen and hydrocarbons.
Smoke	Small gas-borne particles resulting from incomplete combustion, consisting predominantly of carbon and other combustible material, and present in sufficient quantity to be observable independently of the presence of other solids.
Sorbent	A liquid or solid medium in or upon which materials are retained by absorption or adsorption.
Sorption	A process consisting of either absorption or adsorption or both.
Specific Gravity	The ratio of the density of the substance in question to the density of a reference substance at specified conditions of temperature and pressure.
Temperature, Absolute	(a) Temperature measured on the thermodynamic scale, designated as degrees Kelvin (K). (b) Temperature measured from absolute zero (-273.15°C or - 459.67 °F). The numerical values are the same for both the Kelvin scale and the ideal gas scale.
Vapor	The gaseous phase of matter which normally exists in a liquid or solid state.
Volume Concentration	Concentration expressed in terms of gaseous volume of substance per unit volume of air or other gas, usually expressed in percent or parts per million.

References

Benedict, Robert P. 1969. *Fundamentals of temperature, pressure, and flow measurements. New* York: John Wiley and Sons, Inc.

Lemon, M. B., and Ference, M. 1946. *Analytical experimental physics.* Chicago: The University of Chicago Press.

Perry, J. *H. Chemical engineer's handbook. New* York: McGraw-Hill Book Co., Inc.

Nebergall, William *H.;* Schmidt, Frederic C.; and Holtzclaw, *Henry, F.,* Jr. 1968. *General chemistry.* Lexington, MA: Reytheon Education Company.

Terraglio, F. P.; Sheehy, J. P.; and Manganelli, R. M. 1958. Recommended units of expression for air pollution. J. *Air Poll. Cont. Assoc. 8:220-222.*

Uennard, J. K. 1947. *Elementary fluid mechanics.* New York: *John* Wiley and Sons, Inc.

Weast, R. C., and Astle, M. J. 1979. *Handbook of chemistry and physics.* 60th, ed. Boca Raton, FL: Chemical Rubber Publishing Co.

Technology Transfer Network (TTN) Air Toxics Web Site, http://www.epa.gov/ttn/atw/allabout.html, USEPA.

Air Trends Web Site, http://www.epa.gov/airtrends/pm.html. USEPA.

Wikipedia.

Practice Exercise Answers:

1. Give the number of significant digits for each of the following:

a. 3.7 → 2 significant figures
b. 2.06 → 3 significant figures
c. 17.41 → 4 significant figures
d. 0.114 → 3 significant figures
e. 0.00134 → 3 significant figures
f. 12000.0 → 6 significant figures
g. 12000 → 2 significant figures
h. 1200.001 → 7 significant figures

2. Give the most accurate/precise number for the following calculations:

a. 1.50 + 2.317 = 3.82 (3 significant figures)
b. 1.50 - 2.317 = -0.817 (3 significant figures)
c. 1500 x 3.94 = 5900 (2 significant figures)
d. 1500+3.94 = 1500 (2 significant figures)
e. 1.500+3.94 = 5.44 (3 significant figures)