Module 5: Quality Control and Quality Assurance of Air Sampling and Monitoring Operations Through Calibration, Verification, and Maintenance

Objectives:

- Quality Assurance and quality control
- Safe handling of gas cylinders
- Calibration and verification of systems for continuously monitored gaseous pollutants

1

Module 5: QC and QA of Air Sampling (Cont'd)

Objectives (Cont'd)

- Calibration and verification of systems for sampling particulate matter (independent sensors for flow rate, ambient temperature, barometric pressure, leak determination field and trip blanks)
- Calibration and verification of passive systems for sampling gaseous pollutants (collocated sampling, field and trip blanks, inspection of devices for damage and cleanliness)

2

Module 5: QA and QC of Air Sampling (Cont'd)

Objectives (Cont'd)

- Calibration and verification of meteorological systems (compass, synchronous motor, independent, traceable sensors for temperature, pressure, and wind speed)
- Calibration and verification of laboratory equipment that supports field sampling operations (traceable weights, standard calibration solutions, temperature and relative humidity weighing chambers)
- Routine maintenance of instrumentation

3

Quality Control and Quality Assurance

- Quality Assurance
- Quality Control

4

Importance of QC and QA in Ambient Air Quality Monitoring

- QC provides data for validation of equipment and monitoring results (precision and accuracy)
- QC checks provides records of instrument performance over time and detects drift
- QA provides independent oversight to ensure QC activities are being performed
- QA also involves data set review, validation, and verification before final presentation

5

Importance of Documentation in Laboratory and Field Notebooks and Data Sheets

- Provides original record of sampling, monitoring, and analysis
- Allow QA auditor to evaluate if proper procedures were followed
- Provides information to troubleshoot problems

6

Calibration and Verification of Systems for Continuously Monitoring Gaseous Pollutants

- Dynamic gas dilution systems
- Direct delivery of low concentration gases to monitors for unattended zero and span checks

7

Dynamic Gas Dilution Systems: Mass Flow Control and Capillary Control

- Safety and checkout for leaks
- Standard, certified gases in metal cylinders
- Clean air supply specifications
- Specifications for tubing and fittings

8

MFC Theory-Calibrator Diagram

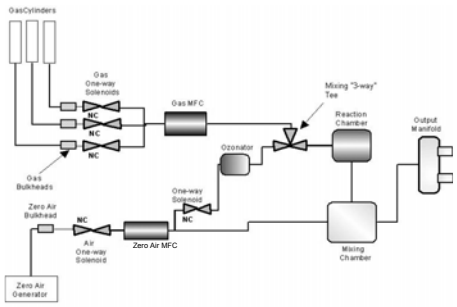

9

Example of MFC Calibrator Systems

Thermo (TEI) Model 146

Environics Model 9100

10

MFC Calibrator Features

- Programmable Scheduled tasks
- Integrated Switch Closure System
- NIST Traceability +/1 % accuracy
- Built in ozone generator – Ozone Standard Reference Photometer (SRP)traceable
- Some MFC Calibrators are compatible with Data Acquisition Systems

11

MFC Calibrator Issues

Calibration should be provided by manufacturer

- Certify your MFC against a NIST traceable flow device
- NIST Traceable flow device should be certified annually (or whenever you suspect a problem)
- Perform quarterly calibrations of your MFCs (or until establish trend)
- Calculate True flow vs Flow Set Points
- Air Flow: 0 – 20 Lpm (recommended)
- Gas Flow 0 – 100 cc/min (recommended)
- Volume corrections should be made to STP (25° C and 760 mm Hg)

12

MFC Calibrations

Air Flow Results (Lpm)

Setting	Display	BIOS
5.000	4.986	5.187
6.000	5.995	6.194
8.000	7.995	8.106
10.000	10.000	10.160
12.000	12.000	12.104
14.000	14.000	14.080
16.000	15.990	16.170
18.000	18.000	18.154
20.000	19.990	19.328

Gas Flow Results (cc/min)

Setting	Display	BIOS
10.000	9.933	7.616
13.000	12.913	10.546
20.000	19.957	17.073
30.000	29.975	26.616
40.000	39.941	36.540
50.000	49.958	46.424
60.000	59.976	56.122
70.000	69.994	67.697
80.000	80.090	78.670
90.000	89.978	89.505
100.000	99.995	97.403

13

MFC Calibrations

Air Flow Calibration

Y = 0.9694x +0.424

R^2 = 0.9981

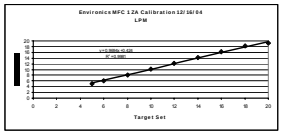

Gas Flow Calibration

Y= 1.0138x -3.323

R^2 = 0.9992

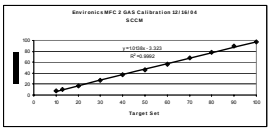

14

Compressed Gas Cylinders - Features

- Come in variety of sizes (size 50 or 150)
- Recommend using passivated aluminum cylinders
- Get U.S. EPA Protocol certification
- Use stainless steel regulators and cylinder valves
- Use stainless steel or Teflon lines from regulator to MFC (Teflon recommended)

15

Compressed Gas Cylinders - Issues

- Recommend reputable vendors
- Purge your lines well!! (Demonstration later)
- Handle with care
- Make sure the cylinders are secure!!
- Transport on cart with regulator removed
- Read your MSDS Sheets
- Leaks!!

16

Safe Handling of Cylinders

- Keep capped when not in use
- Avoid moving with regulator attached
- Use cylinder cart to move
- Strap or chain cylinder to wall or bench
- Always check for leaks

17

Example of Zero Air Sources

TEI Model 111

API Model 701

18

Zero Air Source - Features

Materials utilized for pollutant removal

- UV light source (converts NO to NO2)
- Activated Charcoal (scrubs SO2, O3 and NO2)
- Purafil (scrubs NO)
- Hopcalite, Palladium or Carolite (scrubs CO)

19

Zero Air Source - Issues

Ultra Pure Cylinder Air vs. Zero Air Generators

- Trade off
  - Quantity Used vs. Costs for cylinders
  - High flow rates
  - Humidity issues
  - Purity of air generated
  - Use Ultra Pure Cylinder air to verify Generator purity (recommended)

20

Zero Air Source - Issues

The Zero Generator or Cylinders should be able to provide air below the stated Lower Detection Limits (LDL) of the instruments you are testing. How clean is clean??

•NO 50 ppt

•SO2 100 ppt

•CO 20 ppb

Check the specifications before you purchase.

21

Let's Tie it all together!!!

- The MFC Calibration instrument is certified to a NIST Traceable flow standard
- We have our NIST Traceable Cylinder hooked up
- Our Zero Generator is hooked up and warm
- How do we use this equipment to calibrate our instruments and transfer our Traceability?

☺ I am glad you asked!!

22

Calculating the Concentrations

Calibration Output Gas Law

$$\mathbf{C_1 \times V_1 = C_2 \times V_2}$$

Where:

C_1 = Concentration in the Cylinder
V_1 = Flow of Gas from Cylinder to MFC
C_2 = Concentration from output of MFC
V_2 = Final Volume of mixture from output of MFC (zero air flow + cylinder gas flow)

23

Calculating the Concentrations and Flows

Start with: $\mathbf{C_1 \times V_1 = C_2 \times V_2}$

To solve for V_1: $V_1 = (C_2 \times V_2) / C_1$
To solve for V_2: $V_2 = (C_1 \times V_1) / C_2$
To solve for C_2: $C_2 = (C_1 \times V_1) / V_2$
To solve for C_1: $C_1 = (C_2 \times V_2) / V_1$

24

Calculating the Concentrations and Flows

Start with: $\mathbf{C_1 \times V_1 = C_2 \times V_2}$

C1 = 200 ppm CO
V1 = 20 cc/min
C2 = 250 ppb (precision point)
V2 = ?? lpm

$V_2 = (C_1 \times V_1) / C_2$ = (200 ppm x 20 cc/min)/0.250 ppm
V_2 = 16,000 cc/min = 16 lpm Total flow

Remember, V_2 = gas flow and air flow so:

Air flow = 16,000 cc/min – 20 cc/min = 15,980 cc/min

25

Calculating the Concentrations and Flows

Start with: $\mathbf{C_1 \times V_1 = C_2 \times V_2}$

C1 = ?? ppm CO
V1 = 75 cc/min
C2 = 4000 ppb = 4.00 ppm (Span Point)
V2 = 5.00 lpm (5,000 cc/min)

$C_1 = (C_2 \times V_2) / V_1$ = (4.000 ppm x 5,000 cc/min)/ 75 cc/min
C_1 = 267 ppm

Remember, V_2 = gas flow and air flow so:

Air flow = (5,000 cc/min – 75 cc/min) = 4,925 cc/min

26

MFC Features –Environics 9100

- **Concentration Mode:** User enters Target Output Gas Concentration (ppm or %) for the span gas. The actual concentration is displayed during mixing.
- **Flow Mode:** User enters Target Flow Rate (cc's or liters per minute) for the span gas and dilution gas. Actual flow rates are displayed after mixing is initiated.
- **Volts Mode:** User enters a command voltage to the mass flow controller and the ozone generator. The actual voltage is displayed during operation.

27

MFC Features –Environics 9100 (Cont'd)

- **Program Mode:** Permits multi-event programming and unattended automatic operation of the instrument over a seven-day schedule.
- **Calibrate Mode:** User enters new calibration data for each mass flow controller and ozone generator. (Can be password protected)
- **Maintain Ports:** User enters the name of the span gas in the source cylinder, its concentration (ppm) and the port to which the cylinder is connected.

28

Cautions

- Cylinders are under pressure - Handle with Care
- Do not allow ambient air to back flush into regulator or cylinder
- Check your lines from cylinders to MFC Calibrator often. Leaks of gases can accumulate in the shelter
- Carbon Monoxide is poisonous!!
- Zero Air Systems using Carolite or Palladium scrubbers are operated at high temperatures. Hot to the touch!

29

Summary

- State of the Art MFC systems offer many features and can be integrated with Data Acquisition System (DAS)
- The MFC systems available today are compatible with the precursor gas (PG) instruments
- Lower concentrations cylinders are required since PG instruments have lower ranges and levels of detection
- Gas cylinders should be certified
- Zero air generators should be able to "scrub" below the Lower Detection Limits (LDLs) of the PG instruments
- Calculating the flows and concentrations are easy if you use the Calibration Gas Law

30

Calibration and Verification of Systems For Sampling Particulate Matter

Manual and automated PM samplers

- Independent sensors for flow rate, temperature, and pressure
- Leak determination
- Field and trip blanks

31

SSI PM10 Sampler: Calibration and Verification Checks

Flow Rate Calibration checks:

- Every 6 months
- After every 100 24-hour sampling periods
- When a new motor or brushes are installed
- Record calibration on the Calibration Form using the Resistance Orifice Calibrator
- Compare actual flows against flows from the Volume Flow Controller Look-Up Tables

32

SSI PM10 Sampler: Calibration and Verification Checks (Cont'd)

Flow Rate Verification checks:

- As stated earlier, verification checks are performed before and after each sampling period
- Use the Volume Flow Controller Look Up Tables to calculate flow rate

33

Resistance Orifice Calibrator

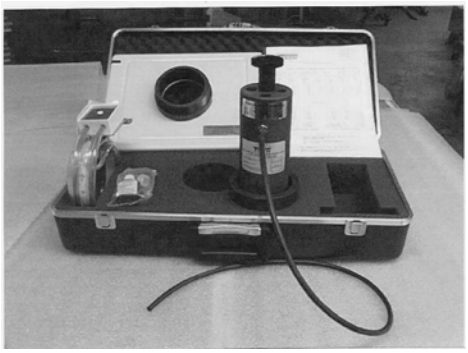

34

MiniVol PM10 Sampler: Calibration and Verification Checks

Flow Rate Calibration checks:

- Every 3 months
- At the beginning of a study
- At the end of a study
- Use the flow meter calibration standard and adjust the flow rate of the MiniVol PM10 Sampler to 5 L/min ± 10% (4.5 to 5.5 L/m)
- Record the calibration date in the Field Notebook

35

MiniVol PM10 Sampler: Calibration and Verification Checks (Cont'd)

Flow Rate Verification checks:

- As stated earlier, verification checks are performed before and after each sampling period
- Use the flow meter calibration standard and measure the flow rate of the MiniVol PM10 Sampler

36

Filter-Based PM Sampler: Calibration and Verification Checks

Calibration for flow rate and temperature and pressure sensors are required:

- On initial installation
- Calibration checks for flow rate and temperature and pressure sensors are performed upon failure of verification checks

37

Filter-Based PM Sampler: Calibration and Verification Checks (Cont'd)

Verification checks for flow rate and temperature and pressure sensors

- Single-point verification checks are performed every 4 weeks
- Multi-point verification checks are performed upon installation, annually, and when out of specifications

38

Automated PM Sampler: Calibration and Verification Checks

Flow Rate Calibration checks:

- Every 3 months
- At the beginning of a study
- At the end of a study

39

Automated PM Sampler: Calibration and Verification Checks (Cont'd)

Flow Rate Verification checks:

- As stated earlier, verification checks are performed before and after each sampling period.
- Use the flow meter calibration standard and measure the flow rate of verification.

40

Independent Sensors For Flow Rate, Temperature, and Pressure

- SSI PM10 samplers use a differential pressure manometer, digital thermometer and probe, and a barometer for ambient pressure.
- MiniVol PM10 samplers uses a flow meter, digital thermometer and probe, and a barometer for ambient pressure.
- Automated samplers use a flow meter, digital thermometer and probe, and a barometer for ambient pressure.

41

Leak Determination

- For the SSI sampler, turn on sampler and verify (by listening for hissing sound) no leaks around filter holder and motor connection assembly
- For MiniVol and automated samplers, insert leak check adapter, pull a vacuum, and look for pressure increase.

42

Trip and Field Blanks

- A trip blank filter assembly is taken to the site, not used, and returned to the laboratory for analysis.
- A field blank filter assembly is taken to the site, installed on the sampler briefly with no flow, removed, and returned to the laboratory for analysis.
- Purpose of either blank is to detect contamination due to shipping and handling.

43

QC and QA of Passive Sampling Systems for Gaseous Pollutants

- Collocated sampling to assess precision
- Field and trip blanks to detect contamination
- Inspection of devices for damage and cleanliness

44

Calibration and Verification of Meteorological Systems

- Compass
- Synchronous motor
- Independent, traceable sensors for temperature and pressure; wind speed

45

Calibration and Verification of Laboratory Equipment That Supports Field Sampling Operations

- Traceable weights
- Standard calibration solutions
- Temperature and relative humidity weighing chambers

46

Routine Maintenance of Instrumentation

- Training of personnel and availability of instruction manuals and SOPs
- Maintain inventory of spare parts and replacement items
- Particulate monitors commonly needed maintenance items
- Gaseous analyzers commonly needed maintenance items

47

Routine Maintenance of Instrumentation (Cont'd)

- Passive sampling devices commonly needed maintenance items
- Meteorological sensors commonly needed maintenance items
- Laboratory equipment that supports field sampling operations commonly needed maintenance items

48

Maintain Inventory of Spare Parts and Replacement Items

- SSI PM10 sampler (brushes, motors, gaskets, timers, SSI latches hooks, and filter trays
- MiniVol sampler (AA battery, 2 amp fuses, interconnection board, pump valve, pump, batteries, and battery re-charger)
- Automated PM samplers (motors, gaskets, O-rings)
- Passive samplers (parts for Ogawa assembly)

49

Particulate Monitors: Commonly Needed Maintenance Items

- Items to clean inlets
- Impactor grease or oil
- O-rings
- Calibrated flow meter or resistor plate to check flow rates
- Traceable thermistor/thermometer to check temperature sensor
- Traceable barometer to check pressure sensor

50

SSI PM10 Sampler: Maintenance Schedule

- Should be disassembled and cleaned after each 100 full 24-hour sampling periods or every 6 months whichever comes first (perform cleaning prior to 6-month calibration check)
- Clean SSI inlet and inspect for damage
- Inspect gaskets, impaction plate; clean and regrease as necessary
- Review instruction manual and SOP for SSI PM10 sampler

51

MiniVol PM10 Sampler: Maintenance Schedule

- Impaction plate should be cleaned after every seventh sample, or sooner if heavy loading
- Inspect O-rings
- Check tubing for cracks, crimps, or obstructions
- Replace AA battery every six months
- Examine battery connecting cables for loose connections
- Clean and inspect pump head valves
- Review instruction manual and SOP for MiniVol PM10 sampler

52

Filter-Based PM Sampler: Maintenance Schedule

- Should service water collection bottle and clean or change out the impactor well or cyclone after every 5 samplings
- Should clean sampler inlet surfaces, clean impactor housing and impactor jet surfaces, examine O-rings, clean interior of sampler every month
- Inspect O-rings, clean down tube, inspect gaskets, service vacuum tubing, tube fittings, and other connections to pump and electrical components

53

Automated PM Sampler: Maintenance Schedule

- Filter on TEOM must be changed per instructions and when indicated by device
- Accuracy of temperature, pressure, and flow rate must be verified with independent methods
  - Maintenance of sensors and pump may be needed
- PM10 inlet, down tube and sharp-cut cyclone must be cleaned per schedule that depends on ambient PM loading

54

Gaseous Analyzers: Commonly Needed Maintenance Items

- In-line particulate filters
- Vacuum pump components
- O-rings
- Capillary inspection and replacement
- Spare inlet sample tubing
- Calibrated flow meter to check flow rates

55

Passive Sampling Devices: Commonly Needed Maintenance Items

- Cleaning tools and equipment

56

Meteorological Sensors: Commonly Needed Maintenance Items

- Lubricants
- Cleaning equipment

57

Laboratory Equipment That Supports Field Sampling Operations: Commonly Needed Maintenance Items

- Dust suppressants
- Cleaning cloths and wipes
- Reliable de-ionized water supply
- Gloves
- Clean lab ware

58

Module 5 Review

- Quality assurance and quality control
- Calibration and verification of systems for continuously monitored gaseous pollutants
- Calibration and verification of systems for sampling particulate matter
- Calibration and verification of passive systems for sampling gaseous pollutants
- Calibration and verification of meteorological systems
- Calibration and verification of laboratory equipment that supports field sampling operations
- Routine maintenance of instrumentation

59