Module 3: Manual Active and Passive Ambient Air Sampling Devices

Objectives:

- PM10 and PM2.5
- Ozone (O3), sulfur dioxide (SO2), and nitrogen dioxide (NO2)
- Carbon Monoxide (CO)
- Lead (Pb)
- Meteorological Equipment and its uses

1

TSP, PM10, and PM2.5

- Total Suspended Particulate (TSP) High Volume Sampler
- Size Selective Inlet (SSI) air sampler
  - PM10
  - PM2.5
- Saturation sampler: Airmetrics MiniVol
  - TSP
  - PM10
  - PM2.5

2

Total Suspended Particulate Sampler (High Volume Sampler)

3

SSI PM Sampler

- The SSI sampler is considered a Federal Reference Method (FRM) in the U.S.
- Two modes of operation
  - Volumetric Flow Controller (VFC)
    - Use of "lookup tables" to calculate flow rate
  - Mass Flow Controller (MFC)
    - MFC senses a decrease in air flow and increases the voltage to the blower which increases the blower speed in order to maintain flow

4

SSI PM_{10} Sampler: Operation

- Power supply: 220 volts, 50 cycles
- Two nozzle plates and impaction plate
- Uses an 8" x 10" filter
- Motor pulls air through filter at 40 ft^3/min (1.13 m^3/min)
- Digital programmer and timer or mechanical 24-hr chart recorder

5

High Volume SSI PM10 Sampler Used In Ghana and Tanzania Programs

6

SSI PM10 Sampler Cut-Away View

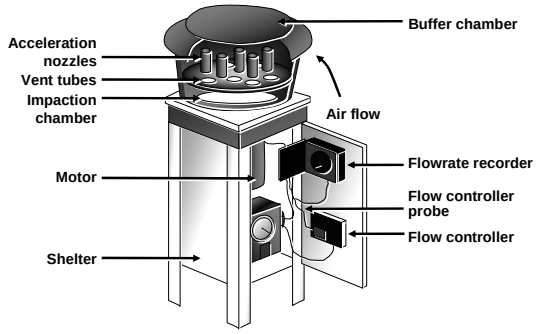

7

High Volume SSI PM_{10} Sampler Head

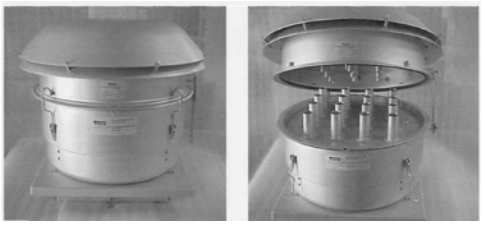

8

High Volume SSI PM_{10} Sampler Head Schematic Diagram

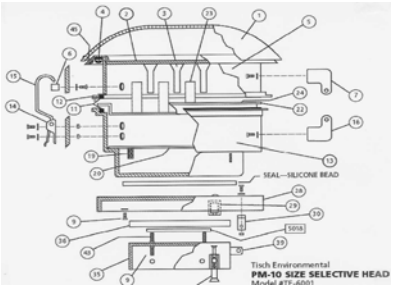

9

High Volume SSI PM_{10} Sampler Base Schematic Diagram

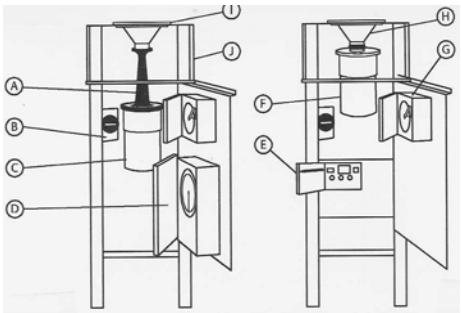

10

High Volume SSI PM_{10} Sampler Filter Tray

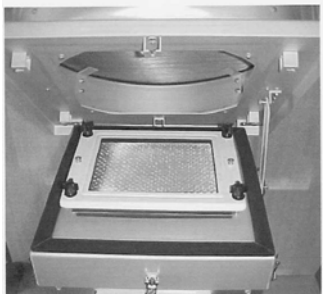

11

High Volume SSI PM_{10} Sampler Filter Holder, Volume Flow Controller (VFC), and Motor Assembly

12

SSI PM_{10} Sampler Digital Programmer Timer

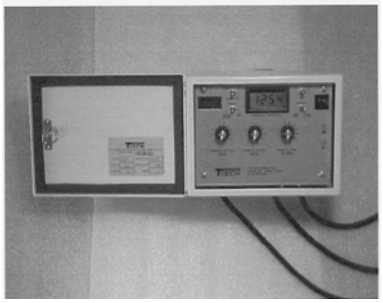

13

SSI PM_{10} Sampler Schematic Diagram of Digital Programmer Timer

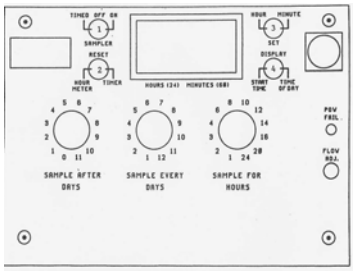

14

Typical PM10 Site in Accra, Ghana

15

Typical PM10 Site in Accra, Ghana

16

SSI PM_{10} Measurement Needs and Requirements

- Clean room for preparation and analysis
- Desiccators to condition PM10 filters
- Balances with a minimal resolution of 0.1 mg
- Calibration Weights
- Laboratory Notebook
- Filters
- Filter transporting bag with label

17

Two Types of Desiccators for Conditioning PM10 Filters

Cabinet Style

Bell-shaped Glass

18

Set Up for Weighing 8 by 10-inch PM10 Filter

19

Clean Room Requirements

- Positive air flow preferred (positive pressure)
- Temperature Control (20 to 22° C ±2°C over 24 hours)
- Relative Humidity (30 to 40% ± 5% over 24 hours)
- Keep room dust-free
- Use lab coat and powder-free gloves

20

Saturation Sampler: Airmetrics MiniVol PM_{10}

21

MiniVol PM_{10} Sampler: Operation

- Battery recharging
- Greasing the impaction plate
- Checking battery voltage
- Transporting sampler
- Programming the timer
- Battery connecting plugs
- Checking flow rates
- Transporting sampler
- Placing of the filter head

22

Airmetrics MiniVol PM_{10} Programmer and Timer

23

Airmetrics MiniVol PM_{10} Inlet Head

24

Airmetrics MiniVol PM_{10} Mounting

25

Airmetrics MiniVol Sampler Mounting in Accra, Ghana

26

Saturation Samplers: Airmetrics MiniVol PM10

- Advantages
  - Small, compact sampler that can easily be moved from one location to another
  - Can operate with electricity or batteries
  - Special uses for roadside and indoor sampling
  - Can be used to measure TSP, PM10, and PM2.5
  - Inexpensive in cost and maintenance
  - Filter extract can be analyzed for lead

27

Saturation Samplers: Airmetrics MiniVol PM10 (Cont'd)

- Disadvantages
  - Small filter size that in highly polluted areas could block air flow creating flow rate problems
  - Not considered a FRM in the U.S.
  - Battery need to be recharged after each 24-hour sampling period

28

Airmetrics MiniVol PM_{10} Measurement Needs and Requirements

- Clean room for preparation and analysis
- Desiccators to condition PM_{10} filters
- Balances with a minimal resolution of 0.1 mg
- Calibration Weights
- Laboratory Notebook
- Filters
- Filter transporting bag with label

29

Estimated Costs: PM Samplers

PM-10 High Volume SSI	US $ 6500
AirMetrics MiniVol	US $ 2200
Clean Room	
Balance (0.1mg)	US $ 2,000+
MicroBalance (0.001mg)	US $ 17,000+
Desiccator Cabinet	US $ 400 - $ 1000
Calibration Weight Set	US $ 600 - $ 1,000

30

Ozone (O3), sulfur dioxide (SO2), and nitrogen dioxide (NO2)

- Passive samplers
  - Ogawa badges
- Wet chemistry
  - Bubblers
  - Impingers

31

Ogawa Passive Badges for SO2, NO2, and O3

- Principle of operation
  - Diffusion
  - Chemical reactions at treated pad surfaces
  - Time-weighted concentration obtained

32

Ogawa Passive Badges for SO2, NO2, and O3

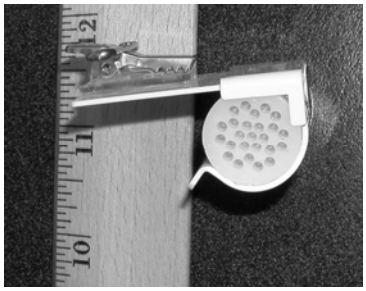

33

Ogawa Sampler Assembly

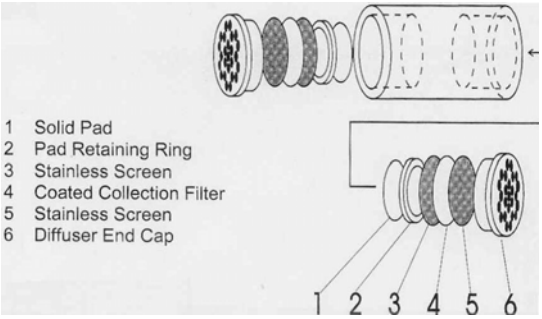

34

Ogawa Passive Badge Samplers

Cleaning
- Deionized water
- Air dry

Loading and Assembly
- Use clean room; clean tabletop lined with laboratory tissue or paper
- Use powder-free plastic or vinyl gloves
- Store badge in plastic bag
- Label samplers with a unique numbering system

35

Ogawa Passive Badge Samplers (Cont'd)

Disassembly
- Use clean room; clean tabletop lined with laboratory tissue or paper
- Use powder-free plastic or vinyl gloves
- Place filters in labeled 8-mL bottles

Shipment to Ion Chromatography Laboratory
- All Ogawa Passive Badges should be placed in a sealed transportation bag with a Request for Analysis Form
- Control blanks need to be processed with each air pollutant type

36

Ogawa Passive Badge

- Advantages
  - Simple to use
  - Ideal for finding "hot spots"
  - Wide coverage at low expense
  - No power needed
  - Badges are re-useable

37

Ogawa Passive Badge (Cont'd)

- Disadvantages
  - Integrated sample required
  - Contamination possible when assembled and disassembled
  - Requires an ion chromatograph for analysis of reaction products
  - Must run field blanks

38

Ogawa Passive Badge Sampler Measurement Needs and Requirements

- Clean room for preparation and analysis
- Ion chromatograph (IC)
- IC calibration standards for each pollutant type
- Calculations for concentrations
- Laboratory notebook

39

Ion Chromatograph (IC)

An IC is useful for analysis of ions produced by reaction of SO2, NO2, and O3 with the Ogawa Passive Badge Samplers.

40

Examples of Ion Chromatographs

41

Ion Chromatograph Capabilities

- Analysis of both cations and anions
- Useful for studies of:
  - Drinking water chemistry (F^-, for example)
  - Acid rain chemistry (NO_3^-, SO_4^{2-})
  - Components of particulate matter
  - Ambient air gases that convert to cations and anions on treated filters (ammonia, NH_3, becomes NH_4^+; SO_2 becomes SO_4^{2-} O3 oxidizes NO_2^- to NO_3^-)

42

Ogawa Passive Sampler Cost Estimates

- Badge Assembly — US $ 72
- Treated Filters — US $ 112 per pack of 40
- Ion Chromatograph (IC) — US $ 12,000
- IC Analysis/Report — US $ 75

- Labor Estimate (cleaning, assembly, disassembly) ~ 1/2 hour

43

Wet Chemistry Samplers

- Principles of Operation
  - Use of impingers and bubblers
  - Trap/react pollutant in reagent
  - Constant flow rate with pump
  - Sample handling care
  - Analysis often by colorimetry

44

Wet Chemistry Samplers (Cont.)

- Disadvantages
  - Sampling equipment is glass (breakable)
  - Interferences from other gaseous species
  - Sample preservation concern
  - Absorbing materials often unavailable
  - Full chemistry lab required

45

Carbon Monoxide (CO)

- Draeger diffusion tubes
- Onset HOBO monitor

46

Draeger Tubes

- Principle of Operation
  - Absorption of pollutant on media creating a color change

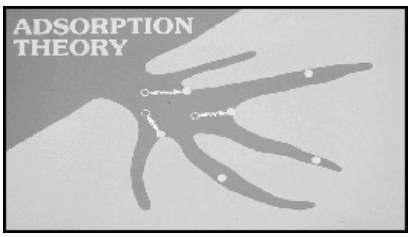

47

Draeger Diffusion Tubes for CO

48

Draeger Tube Sampling

- Advantages
  - Able to obtain a real-time reading
  - Inexpensive to use
  - Must be used appropriately

49

Draeger Tube Sampling (Cont'd)

- Disadvantages
  - Difficult to read scale at times
  - Affected by high relative humidity and high temperatures
  - Possible interferences from other compounds
  - Do not misuse

50

Onset HOBO CO Monitor

- Electronic device that detects real-time interval CO readings
- Electrochemical sensor

51

Onset HOBO CO Monitor

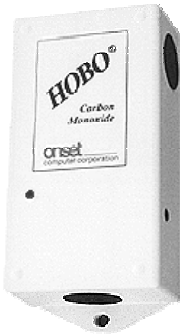

52

Onset HOBO CO Monitor

- Advantages
  - Easy to use
  - Battery operated with no special wiring required
  - User selectable start time/date and sampling interval
  - Wall mounted
  - Versatile with 3 ranges of detection
  - Inexpensive in cost
  - Life expectancy 5 years
  - Appropriate for indoor use

53

Onset HOBO CO Monitor (Cont'd)

- Disadvantages
  - Must have a cover for weather
  - Requires a computer and software to down load data

54

Lead (Pb)

- Analysis of the PM filter extracts by atomic absorption spectroscopy
- Low lead filter required
- Requires laboratory

55

Approximate Costs for Passive Carbon Monoxide Monitors

■ Draeger Tube (box of 10)	US $ 89
■ HOBO	US $ 220
■ Needs software, USB adapter, and computer to download data	US $ 180

(This price does not include computer.)

56

Meteorological Equipment and Its Uses

- Uses of meteorological data in air monitoring
- Wind speed
- Wind direction
- Other meteorological parameters
- Siting and installation of meteorological equipment

57

Typical Meteorological Station in U.S.

58

Typical Meteorological Station in U.S.

A goal for meteorological monitoring is to develop a strategy to support air quality management programs.

59

Portable Digital Meteorological Monitoring System

60

Wind Speed

- Anemometer
  - Cup Anemometer
  - Propeller Anemometer
  - Ultrasonic Anemometer

61

Cup Anemometer

62

Propeller Anemometer

63

Ultrasonic Anemometer

64

Wind Direction

- Wind vane
- Ultrasonic
- Determination of true North is essential !

65

Other Meteorological Parameters

- Temperature
- Atmospheric pressure
- Dew point and relative humidity
- Solar radiation
- Turbulence

66

Siting and Installation of Meteorological Equipment

- Height of towers
- Distance from obstructions to air flow
- Data acquisition
- Long-term maintenance

67

Approximate Costs for Meteorological Sensors and Data Acquisition System

Simple Systems (WS/WD)	US $ 1000
Total System (WS/WD/T/DP/SR)	US $ 6000+
Tower (10 meter height)	US $ 2500
Tower (3 meter height)	US $ 500
Data System	US $ 1400

68

Module 3 Review

Manual and passive methods for measuring air pollutants and meteorology parameters were discussed.

- PM10 and PM2.5
- Ozone (O3), Sulfur Dioxide (SO2), and Nitrogen Dioxide (NO2)
- Carbon Monoxide (CO)
- Lead (Pb)
- Meteorological Equipment and its Uses

69