OST 4-19-06

Handout 1

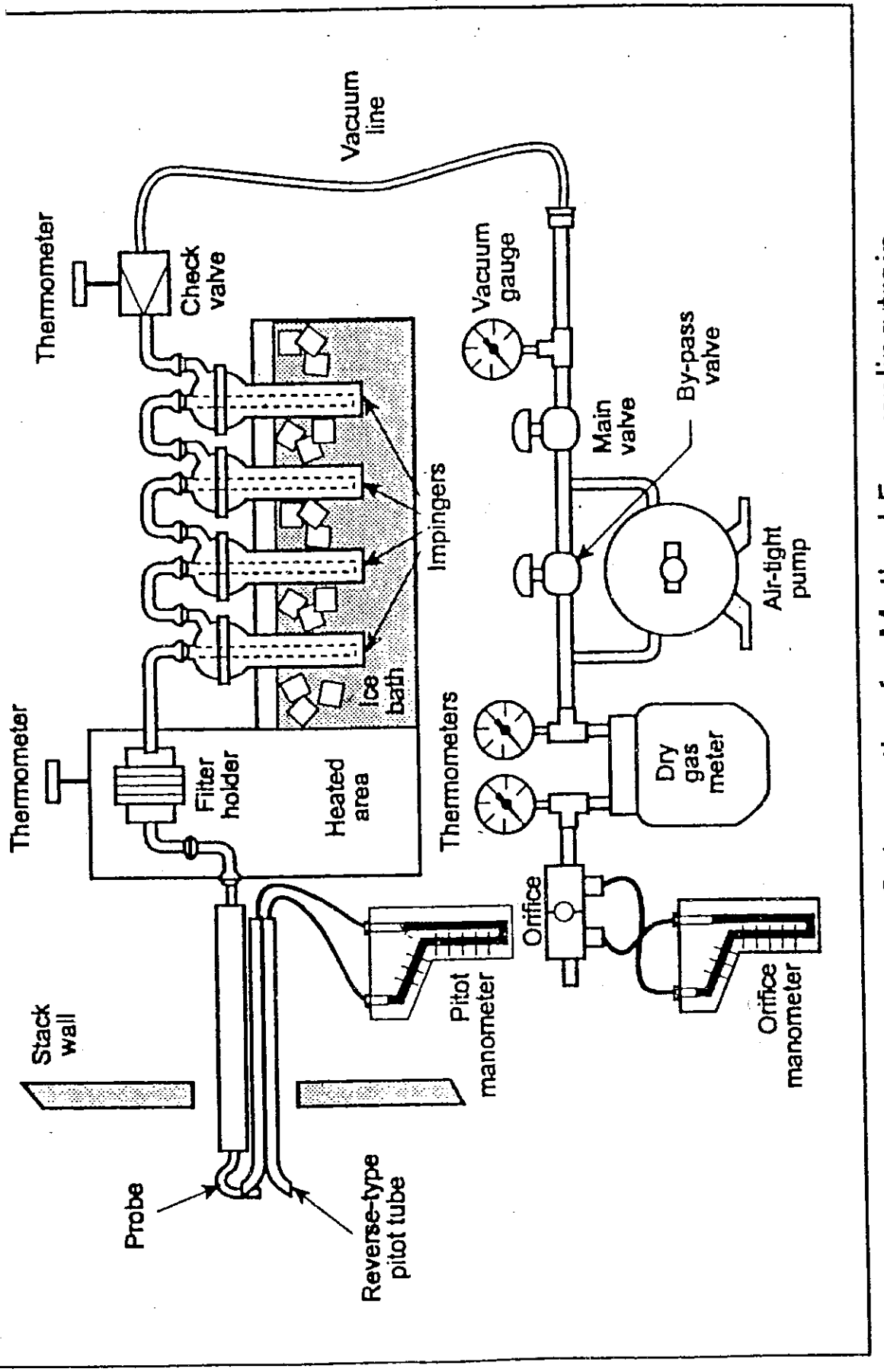

Figure 3-6. Schematic of a Method 5 sampling train

The Avogadro Group

Handout 2

TEST PLAN FOR EMISSION COMPLIANCE TESTS AT [redacted] IN [redacted] CALIFORNIA

Prepared for:

[redacted]

[redacted] California

for Submittal to:

SAN JOAQUIN VALLEY UNIFIED AIR POLLUTION CONTROL DISTRICT

Modesto, California

Prepared by:

[redacted]

January 25, 2002

T02003

The Avogadro Group, LLC

4085 Nelson Ave., Suite E
Concord, CA 94520
(925) 680-4300
(925) 680-4416 FAX
avogadrogroup.com

RECEIVED

SAN JOAQUIN VALLEY
UNIFIED A.P.C.D.
NO. REGION

January 25, 2002

[redacted]
San Joaquin Valley Air Pollution Control District
4230 Kiernan Avenue, Suite 120
Modesto, CA 95356

Phone: (209) 209-557-6400
Fax: (209) 209-557-6475

Subject: Emission Compliance Tests at [redacted]

Dear Ms. [redacted]

The Avogadro Group has been contracted to conduct the emission compliance tests at the new [redacted] facility in [redacted] California. A Test Plan has been enclosed for your review. The objective of the testing program is to determine compliance with the conditions of the Authority to Construct permits N-[redacted] for these units.

[redacted] we appreciate your expeditious review of this Test Plan. Please call me at (925) 680-4337 if you have any questions.

Sincerely,

[redacted]
Project Manager

[redacted]

SUMMARY INFORMATION

PROJECT PARTICIPANTS:

Source Location: [redacted]
[redacted] California

Contact: [redacted]

Telephone: [redacted]

Facsimile: [redacted]

Testing Firm: THE AVOGADRO GROUP
4085 Nelson Avenue, Suite E
Concord, California 94520

Contact:	Mr. Kevin Crosby Project Manager	Mr. Thomas W. Stucker Owner
Telephone:	925.680.4337	925.680.4317
Facsimile:	925.680.4416	925.680.4416

Test Date(s): February 13 to 15, 2002

TABLE OF CONTENTS

SECTION ..... PAGE

1.0 INTRODUCTION 4

2.0 FACILITY DESCRIPTION 4

3.0 TEST PROGRAM DESCRIPTION 5

3.1 TEST CONDITIONS 5

3.2 SAMPLING LOCATIONS 5

3.3 TEST PROCEDURES 5

3.3.1 Gaseous Emissions 5

3.3.2 Ammonia 6

3.3.3 Volatile Organic Compounds (VOC) 7

3.3.4 Particulate Matter less than 10μm (PM_{10}) 7

3.3.5 Volumetric Flow Rates and Pollutant Emission Rates 7

3.4 TEST SCHEDULE ..... **ERROR! BOOKMARK NOT DEFINED.**

4.0 REPORTING 9

1.0 INTRODUCTION

The Avogadro Group (Avogadro) has been contracted by [redacted] to perform the initial emission compliance tests at their natural gas compressor station in [redacted] California. The tests will be conducted on the exhaust from each of two reciprocating, internal-combustion engines.

Emissions will be measured as required by the Authority to Construct permits [redacted] issued by the San Joaquin Valley Unified Air Pollution Control District (SJVUAPCD). Tests will be performed to measure the following emissions:

- CO, O_2, Ammonia, Particulate Matter
- NO_X and CO
- Volatile Organic Compounds(VOC)

The tests are scheduled forFebruary 13 to 15, 2002. Avogadro will provide the testing personnel and equipment. [redacted] will provide the process operating conditions, and the process data. The test results will be reported in one compliance test report. This test plan presents descriptions of the tests to determine compliance with the permit conditions.

2.0 FACILITY DESCRIPTION

[redacted] operates a natural gas compressor station in [redacted], California. The plant draws natural gas from the pipeline and compresses the gas for injection into an underground storage reservoir. When needed, natural gas is withdrawn from the reservoir to send to customers. The plant includes two reciprocating internal-combustion engines driving reciprocating gas compressors.

Each engine is a Caterpillar Model G3616, turbocharged 4-stroke, lean-burn engine with positive crankcase ventilation. Each engine is rated at 4,445 brake horsepower, and burns natural gas. The engines are housed in a building for noise control. The engine exhaust passes out of the building into a silencer unit, which also includes a selective catalytic reduction (SCR) system and oxidation catalyst. Urea is injected upstream from the SCR catalyst for control of NO_X emissions, and the oxidation catalyst controls CO and VOC emissions.

3.0 TEST PROGRAM DESCRIPTION

The testing program will be conducted to determine compliance with the limits of the Authority to Construct.

3.1 TEST CONDITIONS

Each engine will be operated as near as possible to the full load condition of 4,445 brake horsepower. The actual engine load will depend on pipeline pressure and storage pressure at the time of the test. Operating conditions will be determined and documented by [redacted] personnel. Process data in terms of fuel flow rates and engine horsepower production will be provided by Lodi Gas Storage to Avogadro for inclusion in the final report.

3.2 SAMPLING LOCATIONS

Sample gas will be extracted using probes inserted into the exhaust stack from each engine. The exhaust gases from each engine flow through exhaust pipes to a horizontal, cylindrical muffler, and out through a cylindrical duct that turns upward into a vertical stack. Each stack is approximately 30 inches in diameter and extends nearly 8.75 feet above the end of the bend to a 45° mitered end. Each stack has two six-inch couplings mounted as sampling ports. The ports are located approximately 2 ½ stack diameters downstream from the bend, and 1 diameter upstream from the top of the stack. Access to the ports will be provided by boom manlift.

3.3 TEST PROCEDURES

The test procedures to be used are listed in Table 3-1. Descriptions of the site-specific applications of and modifications to standard procedures are presented in the following sub-sections.

3.3.1 Gaseous Emissions

Concentrations of the gaseous constituents of the stack gas (NO_x, CO, CO_2, and O_2) will be measured using Avogadro's Continuous Emissions Monitor (CEM). This system meets the requirements of EPA and CARB methods for gaseous species. A heated Teflon line and ice bath knockout will be used to prevent loss of NO_2 in the sampling system. The NO_x analyzer will be operated in the NO_x mode to measure NO plus NO_2.

TABLE 3-1
TEST PROCEDURES FOR [redacted] FACILITY

Parameter	Measurement Principle	Reference Method	Comments
NO_X	Chemiluminescent Analyzer	CARB 100	3, 30-min. test runs (per engine)
CO	GFC/NDIR Analyzer	CARB 100	3, 30-min. test runs
O_2	Electrochemical Analyzer	CARB 100	3, 30-min. test runs
CO_2	NDIR Analyzer	CARB 100	3, 30-min. test runs
Ammonia	Ion Selective Electrode	BAAQMD ST-1B	3, 30-min. test runs
VOC	Bag Samples / GC Analysis	EPA 18	3, 30-min. test runs
PM_{10}	Filterable and Condensable	EPA 201A/202	3, 120-min. test runs (per engine)
Volumetric Flow Rate	Calculated from Fuel Factor and Fuel Flow	EPA 19	With each test run

* The sampling site does not allow accurate flow measurement by pitot tube, so the flows and emission rates will be calculated from fuel flow and F-factors (EPA Method 19).

3.3.2 Ammonia

The concentration of ammonia will be determined by BAAQMD Method ST-1B. Samples will be drawn through a probe of glass or stainless steel tubing inserted into the stack. The sample will be drawn from the probe through a connecting line of Teflon tubing and through a series of impingers. The ammonia will be absorbed into a solution of 0.1N HCl, which will be recovered at the end of each test run.

The samples will be analyzed in the Avogadro laboratory using an ion-selective electrode. The electrode will be calibrated with standard solutions, and the results will be expressed as stack concentrations in ppm volume dry.

3.3.3 Volatile Organic Compounds (VOC)

The concentration of volatile organic compounds will be determined by EPA Method 18. Triplicate samples will be sampled into Tedlar bags, which will be shipped overnight to Zalco Laboratories in Bakersfield, California or AA&C in Ventura, California for analysis by GC/FID within 72 hours of sampling.

The sampling apparatus includes a probe of quartz glass or Teflon tubing connected with Teflon and stainless steel fittings to the Tedlar bag. The bag will be located inside a rigid container, and will be filled with sample by displacement as the sampling pump evacuates the container. The sampling rate will be set to fill each 10-liter bag in 10 to 20 minutes. The sampling probe will be located at a single point near the stack midpoint.

3.3.4 Particulate Matter less than 10μm (PM_{10})

Emissions of PM_{10} will be measured using EPA Methods 201A and 202. Three 120-minute test runs will be conducted on each engine. The samples will be analyzed in the Avogadro laboratory. PM_{10} concentrations will be converted to units of grams per brake horsepower-hour using the volumetric flow rate, as described in Section 3.3.5, and engine brake horsepower provided by the [redacted] process instrumentation.

3.3.5 Volumetric Flow Rates

The volumetric flow rate at each stack will not be measured directly. The fuel flow rates from the plant's calibrated flow meter and F-Factors obtained from fuel gas analysis will be used to calculate the pollutant emission rates. The flow rate calculations will be conducted according to EPA Method 19 as follows:.

$$\text{Flow (dscfm)} = \text{Fuel flow (MMBTU/hr)} \times \text{F-Factor (scf/MMBTU)} \times 20.9/(20.9 - \%O_2) \times (1\ \text{hr}/60\ \text{min})$$

The testing program is scheduled for February 13 to 15, 2002. A proposed schedule is provided in Table 3-2.

TABLE 3-2.
PROPOSED TEST SCHEDULE
[redacted] COMPLIANCE TESTS

DAY	LOCATION/ACTIVITY	TEST RUNS	RUN TIME
Jan. 25, 2002	Test Plan Submitted	--	--
Feb. 11	**Compliance Tests #1**		
	Equipment Preparation	--	--
Feb. 12	Travel, set-up	--	--
Feb. 13	Engine 1 Tests, Particulate Matter	1, 2	120 min. ea.
	NO_X, CO, O_2, VOC, NH_3	1, 2	30 min. ea.
Feb. 14	Engine 1 Test, Particulate Matter	3	120 min.
	NO_X, CO, O_2, VOC, NH_3	3	30 min.
	Set-up for Engine 2	--	--
	Engine 2 Test, Particulate Matter	1	120 min.
	NO_X, CO, O_2, VOC, NH_3	1	30 min.
Feb. 15	Engine 2 Tests, Particulate Matter	2, 3	120 min.
	NO_X, CO, O_2, VOC, NH_3	2, 3	30 min.
	Equipment Recovery	--	--
April 15, 2002	Report, Compliance Tests #1	--	--

Note: There are two additional engines to be installed at the Lodi site. A second series of tests (Compliance Tests #2) will therefore be scheduled when those engines are ready. Those tests are expected to be performed in the Spring of 2002.

4.0 REPORTING

Avogadro will prepare a thorough, clear report summarizing the test results. Complete description and documentation of the items listed in Table 4-1 will be provided. Prior to release by Avogadro, the report will be reviewed for accuracy and completeness. The report will be issued approximately 30 to 60 days after completion of the field testing.

Pollutant emissions will be reported in units of ppm dry volume @ 15% O_2 (except PM_{10}), lb/MMBTU, and grams/bhp-hr (PM_{10} only).

TABLE 4-1
SOURCE TEST REPORT CHECKLIST

Cover Letter

Title Page

Report Certification

1.0 Introduction

2.0 Unit Description

3.0 Test Description

- 3.1 Test Conditions
- 3.2 Sampling Locations
- 3.3 Test Procedures

4.0 Results

APPENDICES

Process Data, Sampling Data, Laboratory Data, Calculations
ARB Independent Contractor certification, Calibration Gas Certificates
Copy of Permits,

Location of Traverse Points in Circular Stacks

1. 10 ft. stack diameter

2. 12 traverse points identified
   i.e. 12 ÷ 2 = 6 traverse points along each axis

3. Go to the column with "6 traverse points"

Traverse Point #	% of Stack Diameter	Traverse Point Calculations	Location
#1	4.4%	0.044 x 10 ft.	0.44 ft.
#2	14.6%	0.146 x 10 ft.	1.46 ft.
#3	29.6%	0.296 x 10 ft.	2.96 ft.
#4	70.4%	0.704 x 10 ft.	7.04 ft.
#5	85.4%	0.854 x 10 ft.	8.54 ft.
#6	95.6%	0.956 x 10 ft.	9.56 ft.

Handout 4

Now, as a review, Figure 1-1 is reproduced here with the associated symbols given for each part of the Method 5 apparatus (Figure A2-1).

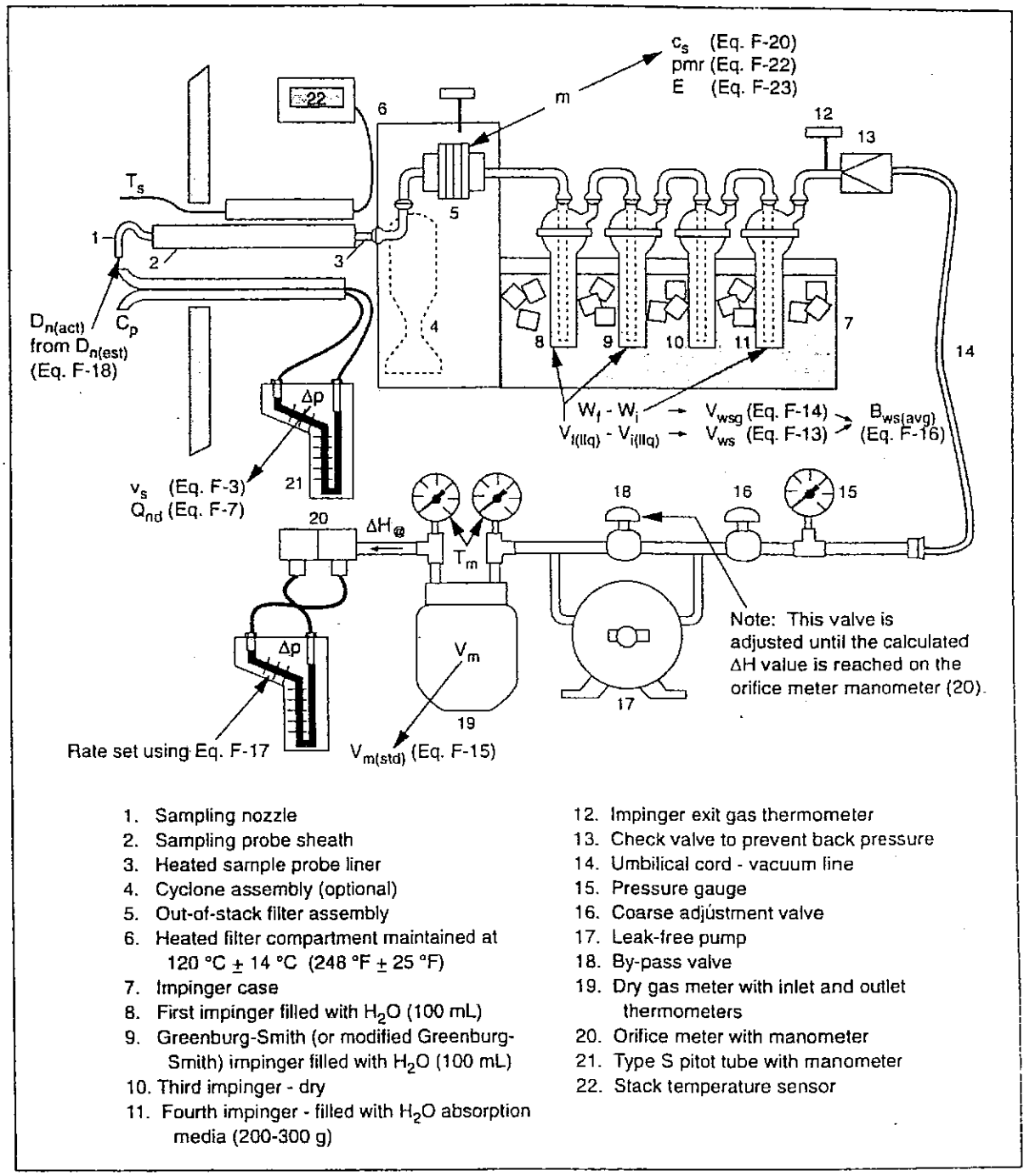

1. Sampling nozzle
2. Sampling probe sheath
3. Heated sample probe liner
4. Cyclone assembly (optional)
5. Out-of-stack filter assembly
6. Heated filter compartment maintained at 120 °C ± 14 °C (248 °F ± 25 °F)
7. Impinger case
8. First impinger filled with H_2O (100 mL)
9. Greenburg-Smith (or modified Greenburg-Smith) impinger filled with H_2O (100 mL)
10. Third impinger - dry
11. Fourth impinger - filled with H_2O absorption media (200-300 g)
12. Impinger exit gas thermometer
13. Check valve to prevent back pressure
14. Umbilical cord - vacuum line
15. Pressure gauge
16. Coarse adjustment valve
17. Leak-free pump
18. By-pass valve
19. Dry gas meter with inlet and outlet thermometers
20. Orifice meter with manometer
21. Type S pitot tube with manometer
22. Stack temperature sensor

Figure F-1. Method 5 particulate sampling train (with symbols)

Method 5 Particulate Test Calculation Form

A. Necessary Data

1. No. of traverse points 12
2. Total test time (θ) 60 minutes
3. Water collected silica gel + impinger H_2O 30.3 mL
4. Particulate weight (m_n) 0.0013 gm
5. Volume metered
   V_m = 9.1680 ft^3 × Y = 1.003 ft^3 (Where Y is the dry gas meter calibration factor)
6. Average Δp 0.01 in. H_2O
7. Average ΔH 0.08 in. H_2O
8. Average meter temperature t_m 96 °F + 460 = 556 °R
9. Average stack temperature t_s 172 °F + 460 = 632 °R
10. Stack absolute pressure 29.9 in. Hg
11. Barometric pressure 29.9 in. Hg
12. $\%CO_2$ 8.8; $\%O_2$ 5.7; %CO 0.0; $\%N_2$ 85.5
13. Area of stack 3.1416 ft^2
14. Area of nozzle 4.8435 ft^2 $\times 10^{-4}$

B. Calculations*

1. Standard volume metered
   (Y = dry gas meter calibration factor)

$$V_{m(std)} = V_m Y \frac{T_{std}}{P_{std}} \frac{P_b + \frac{\Delta H}{13.6}}{T_m}$$

$$V_{m(std)} = \underbrace{9.196}\ (ft^3)\ \frac{528\ (°R)}{29.92\ (in.\ Hg)}\ \frac{29.9\ (in.\ Hg) + \frac{0.08\ (in.\ H_2O)}{13.6\ (in.\ H_2O/in.\ Hg)}}{556\ (°R)} = 8.73\ dscf$$

Note: Fill in the blanks. Units in parentheses are the units for the numbers entered into the blanks. If a number is already filled in, multiply or divide, as appropriate.

2. Moisture Content of Stack Gas
H_2O collected in all impingers in standard cubic feet (scf)

$$V_{wc(std)} = K_1 (V_f - V_i)$$

$$V_{wc(std)} = 0.04707\ (ft^3/mL)\ \underline{30.3}\ (mL) = \underline{1.426}\ (scf)$$

~~Moisture Content of Stack Gas (B_{ws})~~

$$\cancel{B_{ws} = \frac{V_{wc(std)}}{V_{wc(std)} + V_{m(std)}}}$$

$$\cancel{B_{ws} = \frac{___(scf)}{___(scf) + ___(scf)}}$$

Note, if silica gel is used, then use:

$$B_{ws} = \frac{V_{wc(std)} + V_{wsg(std)}}{V_{wc(std)} + V_{wsg(std)} + V_{m(std)}} = 0.153$$

C. Molecular Weight of Stack Gas (lb/lb-mole)

1. M_d (Dry Molecular Weight) = $\Sigma M_x B_x$

$$M = 0.44\ \underline{8.8}\ \%CO_2 + 0.32\ \underline{6.7}\ \%O_2 + 0.28\ \underline{0}\ \%CO + 0.28\ \underline{85.5}\ \%N_2 = \underline{29.63}\ lb/lb-mole$$

2. M_s (Wet Molecular Weight) = $M_d (1-B_{ws}) + 18\ B_{ws}$

$$M_s\ (Wet\ Molecular\ Weight) = M_d (1 - B_{ws}) + 18\ B_{ws} = 27.85$$

4. Average Stack Gas Velocity

$$\bar{v}_{s(avg)} = K_p C_p \left[\frac{T_{s(avg)}}{P_s M_s}\right]^{1/2} [\Delta p]^{1/2}$$

$$\bar{v}_{s(avg)} = 85.48\left(ft/sec\left[\frac{lb/lb-mole\ \ (in.\ Hg)}{°R\ \ (in.\ H_2O)}\right]^{1/2}\right) \underline{.84} \left[\frac{\underline{632}\ (°R)}{\underline{29.9}\ (in.\ Hg)\ \underline{27.85}\ (lb/lb-mole)}\right]^{1/2} [\underline{.0125}\ (in.\ H_2O)^{1/2}]$$

$$\bar{v}_{s(avg)} = \underline{6.92}\ ft/sec$$

5. Average Stack Gas Volumetric Flow Rate

$$Q_s = (3600\ \text{sec/hr})\ (v_{s(avg)})\ (A_s)\ (1 - B_{ws(avg)})\ \frac{T_{std}}{T_{s(avg)}}\ \frac{P_s}{P_{std}}$$

$$Q_s = 3600\ (\text{sec/hr})\ \underline{6.74}\ (\text{ft/sec})\ \underline{3.14}\ (\text{ft}^2)\ (1 - \underline{0.052})\ \frac{528\ (°\text{R})}{\underline{632}\ (°\text{R})}\ \frac{\underline{29.9}\ (\text{in. Hg})}{29.92\ (\text{in. Hg})}$$

Q_s = ___dscf/hr

56,073

6. Pollutant Mass Rate

$$\text{pmr} = \left[\frac{m_n}{V_{m(std)}}\right] \times Q_s$$

$$\text{pmr} = \frac{\underline{0.0013}\ (\text{g})}{\underline{8.73}\ (\text{dscf})} \times \underline{56,073}\ (\text{dscf/hr}) \times \frac{1}{454\ (\text{glb})} = \underline{0.0184}\ (\text{lb/hr})$$

7. Percent Isokinetic Variation (Intermediate Data)

$$\%I = \frac{___\ (°\text{R})\ ___\ (\text{dscf})\ 29.92\ (\text{in. Hg})}{___\ (\text{ft}^2)\ ___\ (\text{min})\ ___\ (\text{ft/sec})\ ___\ (\text{in. Hg})\ \ 528\ (°\text{R})\ \ 60\ (\text{sec/min})\ (1 - ___)}$$

%I = ___

or

$$\%I = \frac{100\ T_s\left[K_1 V_{lc} + \left(\frac{V_m Y}{T_m}\right)\left(P_{bar} + \frac{\Delta H}{13.6}\right)\right]}{60\ \theta\ v_s P_s A_s}$$

$$\%I = \frac{100\ \underline{632}\ (°\text{R})\left[0.002669\left(\frac{\text{in. Hg ft}^3\ °\text{R}}{\text{mL}}\right)\underline{30.3}\ (\text{mL}) + \left(\frac{\underline{9.196}\ (\text{dscf})}{\underline{556}\ °\text{R}}\right)\left(\underline{29.9}\ (\text{in. Hg}) + \frac{\underline{0.08}\ (\text{in. H}_2\text{O})}{13.6}\right)\right]}{60\ \underline{60}\ (\text{min})\ \underline{6.92}\ (\text{ft/sec})\ \underline{29.9}\ (\text{in. Hg})\ \underline{4.8435 \times 10^{-4}}\ (\text{ft}^2)}$$

% I = 100.9

The unit tested was one LM5000 PD natural gas-fired turbine generating 49 MW. Testing was for the purpose of determining concentrations and emissions of NOx, CO, O_2, NH_3 and VOC. In addition a relative accuracy test audit (RATA) was performed on the NOx, CO and O_2 monitors of the in-stack CEM system and for volume flow determination. An initial 16-point stratification traverse was performed during Run #1. With the absence of stratification, all further testing was performed from a single point. The following methods were used.

Table I - Compliance

Parameter	Method	Analysis Method	Test Runs
NOx	EPA Method 20	TECO Model 10s; Chemiluminescent	9 30 minute
CO	EPA Method 10	TECO Model 48; Gas Filter Correlation	9 30 minute
O_2	EPA Method 20	Teledyne Model 320AR; Micro Fuel Cell	9 30 minute
VOC	EPA Method 18	GC-FID; Analysis for $C_1 - C_6$+	3 30 minute
Ammonia	BAAQMD ST-1B	EPA Method 350.3 Specific Ion Electrode	3 30 minute
Volume Flow	EPA Methods 1 – 2	Pitot Tube Traverse	9
Stack Gas Molecular Weight	EPA Methods 3 - 4	Orsat Analysis and Condensation Train	3 simultaneous with ST-1B
PUC Fuel F-factor and Calorific Value	Fuel Analysis ASTM Methods D-1945-81 and D-3588-91	GC-TCD $C_1 - C_{6+}$, O_2, CO_2, N_2 and Btu/lb	1/unit
PUC Fuel Total Fuel Sulfur H_2S and Mercaptans	Fuel Analysis Double GC	GC-FPD Total sulfur referenced to H_2S standards	1
RATA * (Flow, O_2, NOx & CO)	Performance Specifications 2, 3, 4, and 6	EPA Methods 1- 4, 10, and 20	9

All testing was conducted by Scott Davis and Chris Gatlin of Aeros Environmental, Inc. The VOC, fuel, fuel sulfur and ammonia samples were analyzed by Terry Rowles of Aeros Environmental, Inc.

JOINT INSPECTION REQUIRED with: [redacted]

INSPECTION

ISSUANCE DATE: [redacted]

LEGAL OWNER OR OPERATOR: [redacted]
MAILING ADDRESS: [redacted]

Handout 7

LOCATION: [redacted]

SECTION: [redacted] TOWNSHIP: [redacted] RANGE: [redacted]

EQUIPMENT DESCRIPTION:
ONE 4,445-BHP CATERPILLAR MODEL G3616 NATURAL GAS FIRED LEAN BURN IC ENGINE POWERING A NATURAL GAS COMPRESSOR. THE ENGINE IS SERVED BY A SELECTIVE CATALYTIC REDUCTION SYSTEM AND A 2-WAY OXIDATION CATALYST.

CONDITIONS

1. {118} No air contaminant shall be released into the atmosphere which causes a public nuisance. [District Rule 4102]
2. {15} No air contaminant shall be discharged into the atmosphere for a period or periods aggregating more than three minutes in any one hour which is as dark as, or darker than, Ringelmann 1 or 20% opacity. [District Rule 4101]
3. The NOx emission concentration shall not exceed 11.9 ppmvd @ 15% O2. [District Rule 2201]
4. The CO emission concentration shall not exceed 40.5 ppmvd @ 15% O2. [District Rule 2201]
5. The VOC emission concentration shall not exceed 34.1 ppmvd, as methane, @ 15% O2. [District Rule 2201]
6. The SOx emission concentration shall not exceed 0.0066 g/bhp-hr. [District Rule 2201]
7. The PM10 emission concentration shall not exceed 0.1 g/bhp-hr. [District Rule 2201]
8. The ammonia emission concentration shall not exceed 10 ppmvd @ 15% O2. [District Rule 2201]
9. The combined fuel usage of the engines operating under N-4238-1, N-4238-2, N-4238-3 and N-4238-4 shall not exceed 127,279 MMBtu during any one calendar quarter and shall not exceed 424,264 MMBtu during any one calendar year. [District Rule 2201]
10. The facility shall install and properly maintain the a fuel flow meter, a pressure and temperature transmitter and a gas chromatograph for the purpose of monitoring the fuel consumption, in Btu, of the engines operating under N-4238-1, N-4238-2, N-4238-3 and N-4238-4. [District Rule 2201]
11. The permittee shall monitor and record the catalyst inlet and outlet temperatures and the ammonia injection rate at least once per week. Monitoring shall not be required if the engine is not in operation, i.e. the engine need not be started solely to perform monitoring. Monitoring shall be performed within 1 day of restarting the engine unless monitoring has been performed within the last week. Records must be maintained of the dates of non-operation to validate the extended monitoring frequencies. [District Rule 4701]
12. The minimum acceptable catalyst temperature differential shall be established by source testing this unit or other representative units as approved by the District. [District Rule 4701]
13. Records of the quarterly and the annual fuel consumptions, in Btu, of the engines operating under N-4238-1, N-4238-2, N-4238-3 and N-4238-4 shall be kept. [District Rule 1070]
14. {265} All records shall be retained for a minimum of 2 years, and shall be made available for District inspection upon request. [District Rule 1070]
15. Source testing for NOx, CO, VOC and ammonia slip shall be conducted within 60 days of initial start-up and annually thereafter. [District Rules 1081 and 2201]
16. Source testing for PM10 emissions shall be conducted within 60 days of initial start-up. [District Rule 1081]

[redacted]

INSPECTION WORKSHEET

17. {33} Sampling facilities for source testing shall be provided in accordance with the provisions of Rule 1081 (Source Sampling). [District Rule 1081]

18. {109} Source testing shall be conducted using the methods and procedures approved by the District. The District must be notified at least 30 days prior to any compliance source test, and a source test plan must be submitted for approval at least 15 days prior to testing. [District Rule 1081]

19. {110} The results of each source test shall be submitted to the District within 60 days thereafter. [District Rule 1081]

20. Source testing for NOx emissions shall be conducted utilizing CARB method 100 or EPA method 7E. [District Rule 4701]

21. Source testing for CO emissions shall be conducted utilizing CARB method 100 or EPA method 10. [District Rule 4701]

22. Source testing for VOC emissions shall be conducted utilizing EPA method 25 or EPA method 18, referenced as methane. [District Rule 4701]

23. Source testing for PM10 emissions shall be conducted utilizing CARB method 501 in conjunction with CARB method 5, EPA methods 201 and 202 or EPA methods 201A and 202. If the facility agrees that the PM10 emissions are equal to the total particulate matter emissions then source testing for PM10 may be conducted utilizing CARB method 5 including the back half or CARB method 17 including the back half. [District Rule 1081]

24. Source testing for ammonia slip shall be conducted utilizing BAAQMD method ST-1B. [District Rule 1081]

25. Prior to initial operation of the units authorized by Authorities to Construct N-4238-1-0, N-4238-2-0, N-4238-3-0, N-4238-4-0 and N-4238-8-0 offsets shall be provided for PM10. [District Rule 2201]

26. Offsets shall be provided in the amount that will mitigate the increase in PM10 emissions of 4,122 pounds per calendar quarter for the combined Authorities to Construct N-4238-1-0, N-4238-2-0, N-4238-3-0, N-4238-4-0 and N-4238-8-0. [District Rule 2201]

27. SOx reductions may be utilized to offset PM10 emission increases. The combined distance/interpollutant offset ratio shall be 2.2 pounds of SOx per 1.0 pound of PM10 if the reductions occurred within 15 miles of the proposed facility. The combined distance/interpollutant offset ratio shall be 2.5 pounds of SOx per 1.0 pound of PM10 if the reductions occurred 15 miles or more from the proposed facility. [District Rule 2201]

28. The offsets shall be provided in accordance with District Rule 2201 (New and Modified Stationary Source Review). [District Rule 2201]

TABLE 1-1
SUMMARY OF AVERAGE RESULTS

FLUIDIZED-BED BOILER
OCTOBER 23-24, 2000

Parameter	Test Result	Permit Limit
Particulate Matter (PM)		
gr/dscf	0.0043	--
gr/dscf @ 12% CO_2	0.0034	--
lb/hr	5.999	9.82
lb/day	144.0	235.6
lb/MMBtu	0.0080	--
Non-Methane Organic Compounds (NMOC)		
ppm volume dry	< 1.00	--
lb/hr	< 0.39	1.88
lb/day	< 9.39	45.0
Carbon Monoxide (CO),		
ppm volume dry	17.36	--
ppmvd @ 3% O_2	19.04	--
lb/hr	11.77	21.56
lb/day	282.5	--
lb/MMBtu	0.0163	--
Nitrogen Oxides (NO_X)		
ppm volume dry	23.59	--
ppmvd @ 3% O_2	25.87	50.0
ppmvd @ 13.6% CO_2	21.21	39.0
lb/hr as NO_2	26.28	42.0
lb/day as NO_2	630.7	--
lb/MMBtu	0.0365	0.068
Sulfur Oxides (SO_X)		
ppm volume dry	36.90	--
ppmvd @ 3% O_2	40.47	--
lb/hr as SO_2	57.15	59.0
lb/day as SO_2	1,372	1,420
lb/MMBtu	0.0794	--
% removal efficiency	96.52	70 (minimum)

Note: The permit limits shown above are the lower or more stringent of the EPA and SJVUAPCD permits. "<" indicates the species was not detected in the sample.