EPA 340/1-92-015f
Revised March 1993

Course Module #345

Emission Capture And Gas Handling System Inspection

Reference Volume 2 - Guide On Measurement Ports Location And Design

EPA 340/1-92-015f
Revised March 1993

Course Module #345

Emission Capture And Gas Handling System Inspection

Reference Volume 2 - Guide On Measurement Ports Location And Design

Prepared by:

Crowder Environmental Associates, Inc.
2905 Province Place
Plano, TX 75075
and
Entrophy Environmentalist, Inc.
PO Box 12291
Research Triangle Park, NC 27709

Contract No. 68-02-4462
Work Assignment No. 174

EPA Work Assignment Manager: Kirk Foster
EPA Project Officer: Aaron Martin

US. ENVIRONMENTAL PROTECTION AGENCY
Stationary Source Compliance Division
Office of Air Quality Planning and Standards
Washington, DC 20460

September 1992
Revised March 1993

DISCLAIMER

This final report is furnished to the U.S. Environmental Protection Agency by JACA Corporation of Fort Washington, Pennsylvania and Richards Engineering of Durham, North Carolina. The opinions, findings and conclusions are those of the authors and not necessarily those of the U.S. Environmental Protection. Any mention of products does not constitute endorsement by Richards Engineering, JACA Corporation, or the U.S. Environmental Protection Agency. Parts and fittings equivalent to those listed on measurement port drawings are available from a number of suppliers.

Usage of this material

This material has been developed and assembled to provide training and is not intended to be used for regulatory purposes, or to be a substitute for, nor interpreted as official Agency policy. Every attempt was made to reflect the technical state of art and regulatory information as of the date of publication.

ACKNOWLEDGEMENTS

JACA Corporation and Richards Engineering would like to thank Mr. Kirk Foster of the U.S. Environmental Protection Agency for this assistance during this project. The assistance of Mr. R. Stroup and Mr. S. Schleisser of Nutech Corportation in providing details concerning the replaceable tip S-type pitot tube is also gratefully acknowledged.

Mr. R. C. Richards, P.E. of Richards Technical Services and Mr. J. R. Richards, P.E. of Richards Engineering prepared the measurement port designs. Final drawings were prepared by Ms. Kathy Butz of Graphic Associates and by Mr. R. C. Richards. Mr. Uday Patankar, P.E. of JACA Corporation served as Project Director.

TABLE OF CONTENTS

	Page
1.0 Introduction	1-1
1.1 Background	1-1
1.2 Scope	1-1
2.0 Measurement Requirements and Problems	2-1
2.1 Static Pressure	2-1
2.2 Gas Temperature	2-5
2.3 Gas Stream Oxygen and Carbon Dioxide Concentrations	2-7
2.4 Gas Flow	2-8
3.0 Port Design and Location	3-1
3.1 Limitations of Existing Ports	3-1
3.2 Recommended Port Designs	3-4
3.3 Port Designs	3-6
3.4 Port Locations	3-21
References	4-1

TABLE OF FIGURES

Number	Title	Page
2-1	Aspiration Effect	2-4
2-1	Use of Sanding Disk to Seal Ports	2-4
3-1	Port Located Near Burn Hazard	3-3
3-2	Clean-out Port for D/P Transmitter	3-3
3-3	1/4 Inch Diameter Measurement Ports	3-8
3-4	1/4 Inch Diameter Measurement Port with Extension Tube	3-10
3-5	Modified S-Type Pitot Tube	3-12
3-6	Pitot Tube Port and Sleeve	3-13
3-7	Pitot Differential Pressure Gauge Shelter	3-14
3-8	Modified Stack Sampling Ports	3-16
3-9	S-Type Pitot Tube with Replaceable Tip Shown with Alignment Sleeve	3-17
3-10	Modified Stack Sampling Port and S-Type Pitot Tube	3-19
3-11	Pitot Tube Mounting Bracket	3-20
3-12	Location of Ports on Outlet Duct of Fabric Filter	3-22
3-13	Instrument Port Location for Pulse Jet and Plenum Pulse Baghouses	3-24
3-14	Location of Ports on Reverse Air Fabric Filter, (Outside-to-Inside Flow)	3-25
3-15	Location of Ports on Reverse Air and Shaker Fabric Filters	3-26
3-16	Location of Ports on a Spray Tower Scrubber	3-28
3-17	Location of Ports on Packed Bed, Moving Bed and Tray Type Scrubbers	3-30
3-18	Location of Ports on Gas-Atomized Scrubbers	3-31
3-19	Location of Ports on Inlet Duct to Gas-Atomized Scrubbers	3-32

1.0 INTRODUCTION

Portable instrumentation is useful in evaluating the performance of air pollution control systems during both regulatory agency compliance inspections and source operator routine maintenance checks. However, the use of instrumentation, such as static pressure gauges, thermocouples, oxygen analyzers and pitot tubes has been limited by the lack of adequate measurement ports on the existing control systems. This report examines the data requirements and provides recommendations on measurement port design and location.

1.1 BACKGROUND

The U.S Environmental Protection Agency has been actively involved in the development of new and more detailed equipment inspection procedures. These are intended to provide regulatory agencies with the capability of identifying emerging problems before there is serious community impact and before the equipment deteoriation demands expensive repair. Equally important is the need to have complete technical information when negotiating compliance programs with sources experiencing chronic compliance problems. While these new procedures are being developed primarily to aid regulatory agencies, they will also aid sources operators.

The use of portable instruments such as static pressure gauges, thermocouples, gas analyzers and pitot tubes is often necessary when evaluating the performance of air pollution control systems. Unfortunately, many existing systems have been installed without any measurement ports or with ports in improper locations. This has limited both the regulatory agency inspector and the equipment operator.

As regulatory agencies adopt these new inspection procedures, there will be a need to reach agreement with source operators concerning the types of ports to be installed and concerning the most favorable locations for these ports on specific units. The recommendations presented in this report are intended to serve as a starting point for agency and source personnel in discussing port requirements. Specific designs are proposed which should minimize common measurement errors. Potential safety factors which must be taken into account are also discussed.

1.2 SCOPE

The specific types of control equipment addressed include fabric filters, wet scrubbers, mechanical collectors, absorbers, and electrostatic precipitators. The types of measurements necessary to evaluate performance of each of these types of collectors are briefly summarized and more detailed information is provided in References 1, 2 and 3. The instrumentation required for each measurement is introduced primarily to illustrate the type of probe required and the necessary access to the port area. Common problems which can occur while attempting to use existing ports are also covered. These problems can seriously affect the accuracy of the measurement and can also lengthen the time required to make reasonable measurements.

There can be a number of serious safety problems associated with improperly located measurement ports. The most obvious of these are falls due to ports situated in precarious locations. Other common problems include pollutant accumulation in poorly ventilated areas in the vicinity of the ports, hot surfaces adjacent to the ports, and static charge accumulation on the probes. Static charge accumulation is very common downstream of electrostatic precipitators, but can also occur in any gas stream in which the relative humidity is low and the particulate concentration is high.

Specific port designs are proposed in this report. Drawings and general specifications are provided to facilitate the location and installation of the ports on the types of control devices listed above. They have been designed in a manner to minimize measurement problems while using commonly available parts and materials. It is possible to install these ports economically. The specifications have been prepared to include some flexibility. However, it is easy to modify these designs to satisfy site specific conditions.

Most of the measurement port designs presented in this report are too small for the EPA Reference Method test equipment. The optimum locations for emission testing are usually different than the optimum locations for control system performance diagnosis. Also, the stack sampling ports are too large for the types of probes used with the portable inspection instruments. It must be understood that both stack sampling ports AND inspection ports are necessary in most cases.

2.0 MEASUREMENT REQUIREMENTS AND PROBLEMS

The instruments used to analyze the performance of air pollution control equipment measure basic parameters such as gas static pressures, gas temperatures and gas flow rates. None of the instruments are exotic and all have been in common use for a number of years. Only their use by regulatory agencies is relatively new. All of the instruments are small and easily carried.

Despite the familar nature of the instruments, there has been very little written about measurement techniques and common measurement errors. The following section addresses the data which is necessary for system evaluation and some of the common measurement problems which have been encountered with existing ports. This section provides the basis for later discussions concerning specific port configurations and locations.

2.1 STATIC PRESSURE

The static pressure of a gas stream is simply the pressure exerted in all directions by the fluid, measured in a direction normal to the flow. It is similar to the barometric pressure which is the pressure exerted by the atmosphere on the surface of the earth. When the static pressure is greater than the barometric pressure, it is called "positive" pressure and when it is lower it is called "negative" pressure. Both positive and negative pressures are common in air pollution control systems. The measurement problems and potential safety hazards, however, are quite different for each..

2.1.1 Reasons for Measuring Static Pressure

The gas stream static pressure drop while going through an air pollution control system is a measure of the amount of energy removed from the gas stream. This parameter can be used in a number of ways to identify control system problems as indicated in the brief summary provided below:

Particulate Wet Scrubbers	-	Static pressure drop can be indirectly related to the particulate removal efficiencies for most common types of scrubbers. Demister pluggage and severe air infiltration can also be identified.
Fabric Filters	-	The pressure drop across each compartment provides useful information concerning the dust layer on the bags and the gas flow through the compartment. If the static pressure drop is higher than normal, cleaning system problems or fabric blinding are probable. The static pressure drop across a fabric filter which has been isolated for cleaning provides an indication of the damper operation and condition.

Mechanical Collectors	-	The static pressure drop provides an indication of any problems which change the gas flow resistance. Most such problems lead to increased emissions.
Electrostatic Precipitators	-	Static pressure drop is not a meaningful operating parameter.
Absorbers	-	Static pressure drop changes provide indications of gas flow rate changes, liquor flow rate changes, and poor gas-liquor distribution. The data can also be used to identify demister pluggage and severe air infiltration.

There is a static pressure decrease whenever gas is accelerated in a hood from essentially zero velocity to the duct transport velocity. This is due to the conversion of potential energy to kinetic energy in the duct and due to frictional energy losses. This hood static pressure drop is proportional to the gas flow rate, thereby making this a useful qualitative indication of total hood capture effectiveness. A decrease in the hood static pressure often indicates severe air infiltration in the downstream ductwork or a change in the fan operating conditions.

There is also a static pressure decrease whenever gas is passing through a duct. This is due primarily to the conversion from potential energy to frictional heat. The changes are normally too small to be of diagnostic use. However, the inlet static pressure to the control device can be used as a pseudo hood static pressure. If the absolute value of this static pressure has decreased, the gas flow rate to the collector has probably decreased.

2.1.2 Instruments Used to Measure Static Pressure

Instruments used to measure static pressure are listed in Table 2-1 along with the generally accepted meter operating ranges. The inclined manometer is used primarily for pitot traverse velocity pressure measurements due to its limited range. This instrument has the best resolution of any of the gauges and does not need to be calibrated. The slack tube could theoretically be used for any range. However, practical considerations limit the normal range to about 36 inches of water. The diaphragm gauge can be used over a very wide range. These gauges must be regularly calibrated against a slack tube or inclined manometer.

There is no gas flow through any of these instruments. Therefore, no pumps or power supplies are necessary to operate the gauges. Most of the instruments are easily carried with the only exception being the rather bulky inclined manometer. Generally, it is necessary to lift the inclined manometer to the port location using a rope.

The static pressure measurements can be made in several locations: (1) the interior surface of the duct or collector, (2) the middle of duct, and (3) several locations along a traverse of the duct. Interior surface measurement

is the only option for collectors due to the presence of internal components. These surface measurements are also appropriate for ducts in which the gas velocity is low. However, errors are possible at normal duct velocities with this style of port.

Table 2-1. INSTRUMENTS USED TO MEASURE STATIC PRESSURE

Instrument	Operating Range Inches of Water	Resolution Inches of Water	Accuracy
Inclined Manometer	0 to 5	0.05	1 - 2%
Slack Tube Manometer	0 to 36	0.20	1 - 3%
Diaphragm Gauges	0 to 150	1.00	3 - 5%

In ducts, the surface irregularities around the port and flow patterns within the duct can lead to some variation between surface static pressures and the true static pressure within the gas stream. A more accurate measurement is possible by moving away from the inner surface of the duct and into the main flow stream. To do this, the gauge can be connected to a section of 1/4 inch O.D. tubing. The instruments can also be connected to the downstream side of an S-type pitot tube. With this approach it is possible to traverse the entire duct and average the static pressure measurements. The latter is the preferred approach for field inspection. However, it is more time consuming and difficult to get a pitot tube to the measurement port than it is to move the very small diaphragm gauges around.

2.1.3 Possible Errors in the Measurement of Static Pressure

One of the major errors involved in static pressure measurement is the aspiration effect in negative pressure ducts and vessels (Reference 2). If the port is not entirely sealed around the probe there can be high velocity gas "jets" through the open areas. If these pass by the opening of the probe as shown in Figure 2-1, the jets can induce negative static pressures. The measured value is then the true negative static pressure plus the aspiration induced negative static pressure. While this is usually insignificant below 10 inches of water, it is definitely important at -20 inches of water and above (higher negative pressures). For example, it is possible to measure a -25 inches in a duct where the true static pressure is actually -20 inches. At the very high negative pressure of -100 inches, it is possible to induce additional suction to yield measured values as high as -150 inches W.C.

One common way of sealing a port is to use a cloth or glove around the probe. This is done at the risk of losing the material into the duct where it could damage downstream equipment such as fans and air pollution control devices. To illustrate the forces across the port, the data in Table 2-2 contains the calculated static pressures in pounds force across the area of the port.

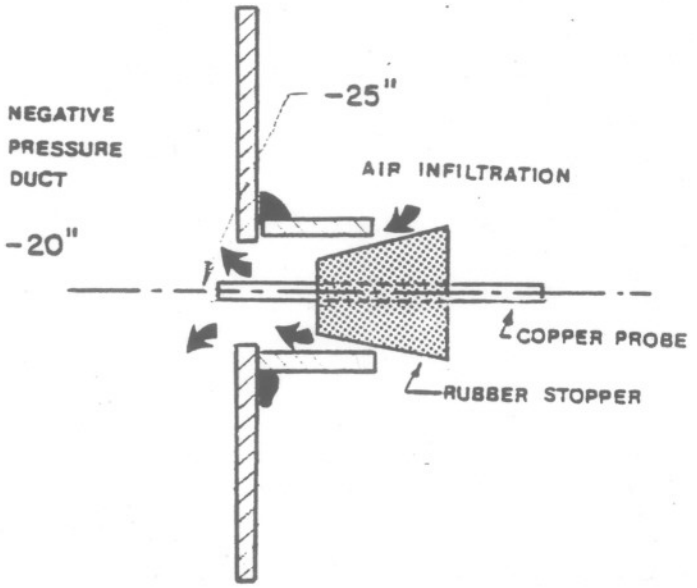

Figure 2-1. Aspiration Effect

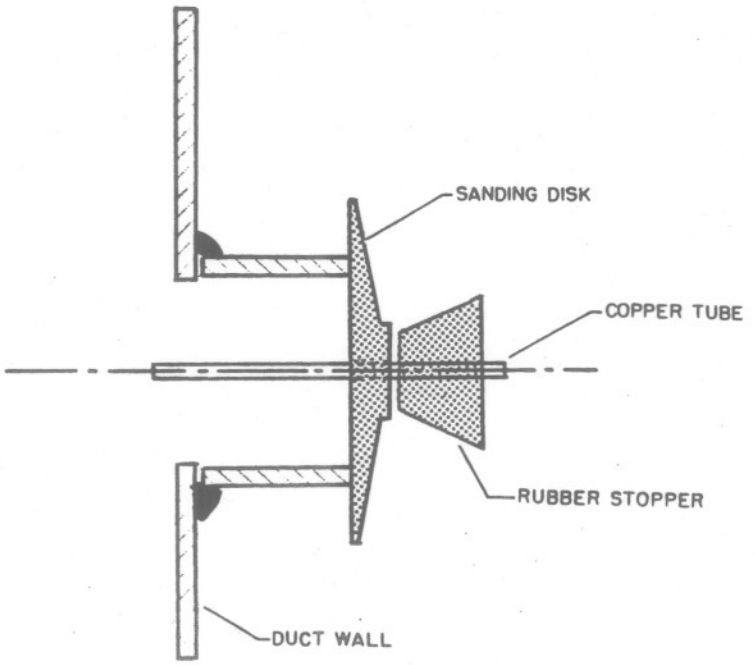

Figure 2-2. Use of Sanding Disk to Seal Ports

Table 2-2. FORCES ACROSS OPEN MEASUREMENT PORTS

Port Diameter Inches	Static Pressure Inches of Water	Total Pressure Pounds
1	10	0.31
1	25	0.78
1	100	3.10
4	10	4.58
4	25	11.45
4	100	45.82

Basis: Open Area of 1 Inch Port equals 0.864 square inches
Open Area of 4 inch port equals 12.73 square inches
(Assuming Schedule 40 IPS Pipe)

It is obvious from the data in Table 2-2 that the slightest moment of inattention will allow the cloth or glove to be sucked into the duct or vessel being tested. One way to eliminate this problem is to use a flat rubber sanding disk (available for most hardware stores) which has a diameter of at least one inch greater than the port being used. This is shown in Figure 2-2.

Another approach is to use a large rubber stopper, drilled out to allow movement of the port. Both this and the rubber sanding disk provide a seal against infiltration around the probe. However, there can be gas leakage on positive pressure equipment. Also, the seal inherently isolates the probe from the duct. Therefore ,the dissipation of static charges which develop on the probe is inhibited.

2.2 GAS TEMPERATURE MEASUREMENT

2.2.1 Reasons for Measuring the Gas Temperatures

Gas temperature data is often essential in the evaluation of air pollution control system performance. In some cases, the performance of the control device is directly related to the gas temperatures existing at the inlet of the collector. On control devices operating at elevated temperatures, the changes in the gas temperature from inlet to outlet provide one indication of air infiltration, which is one of the insults which can gradually harm the physical condition of control equipment. Closely associated with air infiltration is the localized condensation of acidic vapors and water, both of which attack system components. The temperature data is also necessary to determine if high temperature excursions have probably damaged temperature sensitive components of the control system. A brief summary of the most common uses of gas temperature measurements is provided in the list below for each major type of control system:

Particulate Wet Scrubbers - Measured to determine if the gas stream is saturated after the scrubber and to determine if changes in the inlet gas temperature have changed the quantity of condensed particles.

Fabric Filters	- Measured to determine if high temperature limits of fabric are being exceeded. The outlet temperature is measured to determine if air infiltration is significant or if there is some potential for acid vapor condensation.
Mechanical Collectors	- Measured to determine if air infiltration is significant or if there is some potential for acid vapor condensation. It is also measured to correct the static pressure drop for gas density changes since the baseline period.
Electrostatic Precipitators	- Measured to determine if resistivity changes or severe resistivity differences have been caused by temperature changes. It is also measured to determine if the start-up periods are excessive.
Absorbers	- Measured to determine if there have been major changes in the equilibrium curve.

2.2.2 Instruments Used to Measure Gas Temperature

The equipment generally available for temperature measurement includes: (1) dial-type thermometers, (2) thermisters, (3) fixed position thermocouples, and (4) portable thermocouples. The thermisters will not be discussed further since they have an operating limit of approximately 150°F after which the response is nonlinear. Both the dial-type thermometers and fixed position thermocouples can indicate lower than actual temperatures since they must be mounted close to the duct wall. Some ducts can have a substantial difference between the gas temperature close to the duct wall and that in the center of the duct.

In addition to the limited reach of the dial-type thermometer, the inherent design renders the unit susceptible to a bias to lower than actual temperatures. Heat can be conducted up the metallic stem to the large circular face plate outside of the gas stream. This serves as a very effective heat exchanger.

The probe portion of the dial-type thermometer is the bimetallic coil sealed in the end of the stem. Commercial units are generally 1/4 inch in diameter. The probes for the thermocouples can be a variety of sizes ranging from the bare bead to several sizes of thermowells. The bare bead type thermocouple probe has a diameter of approximately 1/8 inches.

2.2.3 Measurement Problems

If the distribution of temperatures is large enough, errors in operation of the control system are possible. For example, if a fixed position thermocouple on a baghouse inlet indicates 500 °F, the actual gas stream temperature

in the duct center could be 525 °F. The higher temperature exceeds the normally accepted limit of 500 °F. For this reason, it is sometimes necessary to traverse the gas stream to determine both the average temperature and the temperature distribution. This can only be done using a portable thermocouple. Since a flexible thermocouple probe is the easiest to transport around a control device, there must be ways to fix the probe at the desired positiion in the duct. For small ducts, the probe can be threaded through 1/4 inch O.D. tubing as long as the wall thickness does not exceed 1/16 of an inch. This is adequate as long as the duct is small or a complete traverse is not necessary. For for more demanding situations, the probe can be wired or taped (depending on temperature) to an S-type pitot tube.

By placing the thermocouple probe well inside the duct or by performing a complete traverse of the duct, it is possible to avoid the errors due to air infiltration through the port. Note that the 1/4" tube can be bent slightly so that when close to the duct wall, it is out of the path of cold ambient air leaking through the port. The complete traverse is useful when accuracy is very important and a significant temperature variation is expected.

Another common problem is the impaction of water droplets. If the gas stream is not saturated, this will cause rapid fluctuations between the dry bulb and wet bulb temperatures.

2.3 GAS STREAM OXYGEN AND CARBON DIOXIDE CONCENTRATIONS

These measurements are valuable when inspecting air pollution control systems serving stoker fired coal boilers, oil-fired boilers and other fuel combustion sources.

2.3.1 Reasons for Measuring the Oxygen and Carbon Dioxide Concentrations

The control device inlet conditions help to determine if the combustion conditions have deteoriated to the point that excess emission conditions are possible. The difference between the oxygen levels measured before and after the collector clearly show the extent of air infiltration into the collector. With such information, the inspector can evaluate whether or not the corrective actions proposed by the operator have a reasonable chance of succeeding.

2.3.2 Instruments in General Use

Instruments generally used for this purpose include: (1) Orsat Analyzers (2) Specific Gas Absorbers, and (3) Electroconductivity Analyzers. The first two are similar in that the gas sample is mixed with chemicals which absorb one component of the gas sample. The change in the height of a column of liquid is proportional to the concentration of the absorbed gas. The Orsat instrument measures oxygen, carbon dioxide and carbon monoxide from a single gas sample. The specific gas absorbers measure either the carbon dioxide or oxygen concentration. Both the Orsat and Specific Gas Absorbers are manually operated, wet chemical analyzers. The electroconductivity instrument is a standard line powered unit which senses the oxygen concentration in a continuously extracted gas sample. The electroconductivity unit is generally considered as accurate as the Orsat and less time consuming. The specific gas absorbers are very portable and simple to use, but are slightly less accurate

than the other two approaches. The common element of all three approaches is that the sample can be easily acquired through a 1/4" O.D. tube inserted in the gas stream. Again, if there is a need to traverse a large duct, the pitot tube can serve as a sampling tube.

2.3.3 Possible Errors in the Measurement of Oxygen and Carbon Dioxide

The major error possible in the measurement of oxygen and carbon dioxide concentrations is the inadvertent inclusion of inleaking ambient air with the sample. This is avoided by placing the sampling probe upstream from the port or by extending the probe well into the duct. This is identical to the steps taken to minimize air infiltration related static pressure and gas temperature measurements errors.

Downstream of wet scrubbers, the gas stream oxygen and carbon dioxide concentrations are difficult to interpret due to the partial absorption of both in the scrubber. Accordingly, the data can not be used to indicate air infiltration or to identify major changes in process operation.

2.4 GAS FLOW MEASUREMENTS

Gas flow data is measured less frequently than the data discussed previously. It is necessary to confirm problems suspected from the initial evaluation of inspection data.

2.4.1 Reasons for Measuring Gas Flow Rate

For all pollution control systems, the measurement of gas flow rate at the inlet of the unit demonstrates whether or not the proper gas flow rate from the process equipment is being delivered. A drop in the flow rate could be due to a change in fan operation or severe air infiltration into the ductwork downstream from the sampling point. The difference in the gas flow rates before and after the collector provides an estimate of the air infiltration rate (after correction for gas density changes.)

2.4.2 Instruments Used to Measure Gas Flow Rate

The standard instrument for measuring the gas flow rate is the pitot tube. The Standard pitot tube does not need to be calibrated. However, the small static pressure ports are vulnerable to pluggage when used on the inlet side of many particulate control devices. For this reason, the S-type pitot tube is used most often by inspectors.

The dimensions of the pitot tube are partially fixed by EPA Reference Method 1 and partially determined by customer specifications. The width of the sensor portion of the tube must be not exceed 1 and 1/2 inches. The diameter of the tubes is generally 3/8 inches and the tubes are tack welded together at several spots. A thermocouple well may also be included along the pneumatic tubes.

2.4.3 Measurement Problems

Port air infiltration is as much of a problem with this measurement as it was with the previously discussed instruments. It is necessary to seal the port adequately to prevent erroneous measurements at the traverse points close to the port.

Orientation of the probe is important. If it is allowed to dip or float in the gas stream, a lower than actual velocity pressure is indicated. This type of error is especially difficult to avoid when the probe is extended well into the gas stream and the operator has only limited leverage. The second orientation error is simply a matter of carelessness. If the tube is twisted in the gas stream, significant positive or negative errors are possible. Such errors are not common on stack sampling tests since the probe is rigidly mounted on the main sampling tube which is securly hung from the boom. However, in the case of the field inspector, the individual is generally working with only a pitot tube and at a location where the pitot must be hand held. The inspector is also working either alone or with plant personnel who are not familiar with the techniques.

3.0 PORT DESIGN

This section examines some of the major limitations and potential safety hazards of existing ports. Its purpose is to compile a list of criteria which define an acceptable inspection/measurement port for air pollution control systems. Port designs have been developed during this project based on these criteria. They could be installed on many systems with little or no modifications. In other cases, these designs will serve as a useful starting point in developing the necessary ports. Siting recommendations for major categories of control systems have also been proposed.

3.1 LIMITATIONS OF EXISTING PORTS

Because of the relatively limited use of portable instruments on air pollution control systems, little effort has been spent previously on the design and location of ports. Some of these are located in completely inaccessible locations and some have been placed in unrepresentative locations along the ductwork. A variety of safety hazards may be present in the immediate vicinity of the ports.

3.1.1 Port Pluggage

This is a very common problem which plagues measurement ports of practically all sizes and descriptions. The recesses which are inherent to the port provide an ideal location for the accumulation of sludge and solids.

While pluggage can not be avoided entirely, common sense should be used on port location. Ports should be located in a area protected from the natural drainage of water and sludge. They should also be placed in portions of the duct or collector which are usually free of dust accumulation. Due to these problems, the ports should not be on the lower sides of ducts.

Due to plugging tendencies, access to the port area is necessary so that the deposits can be rodded out prior to the measurement. Long tubing runs from the port to an accessible location should be avoided since it is sometimes difficult to clear the deposits using compressed air.

3.1.2 Oversized Port Fumigation

Large 4 inch diameter ports are common since these are large enough for standard stack sampling probes. With positive pressure conditions, however, there can be substantial gas flow out of the port into the immediate vicinity of the inspector. Inhalation hazards can be created if the persons involved do not have the appropriate respirators or if ventilation is poor. Chemical and physical asphyixants can also accumulate within the breathing zone.

The pollutant concentrations can exceed the capability of most cartridge and canister type respirators. In some cases, combinations of pollutants would pose a threat even at lower concentrations since each type of respirator is

effective only for a single pollutant. Therefore, it is important to avoid use of an open positive pressure port.

Large ports are not desirable for inspection measurements since all of the probes discussed in the previous section were relatively small. The largest probe used is the pitot tube which has a width of less than 1 and 1/2 inches (with the exception of the model with the replaceable tip). In some cases, all measurements can be made through 1/4 inch diameter ports. There is no advantage to the large ports and there can be significant safety problems involved when the pressures are even slightly positive.

3.1.3 Ports in Partially Confined Areas

Inhalation hazards similar to those possible with large positive pressure ports occur when the ports are located in portions of the collector with inherently poor ventilation. This is most common in large multi-compartment fabric filters where the measurement ports and instrumentation are mounted in the walkways between rows of compartments. Gas leakage out of access hatches, weld gaps, and ductwork expansion joints can accumulate to high concentrations during periods of low ambient wind speed. Partially confined areas are also common on wet scrubber systems since they are often inside to minimize freezing conditions during off-line periods. The ports on these scrubbers are often located in areas with very little natural ventilation. Partially confined areas are common to all types of air pollution control systems.

3.1.4 Static Charge Accumulation

Particles striking a probe within a gas stream result in some static charge on the probe. If this is not dissipated, it is conceivable that the electrical charge will accumulate to a sufficient voltage to arc over to a grounded portion of the duct wall. This could initiate an explosion within the duct due to the presence of either suspended particulate matter in the gas stream or small deposits of dust at the bottom of the duct. While a search of the literature and numerous contacts with instrument manufacturers has failed to uncover any published reports of static accumulation, unpublished data compiled by the authors of this report indicates that such charges do accumulate under certain conditions.

Considering the explosive nature of many common dusts such as metallic dusts, grain and flour dusts and coal dust, a cautious approach is necessary with regard to static. All probes should be electrically bonded to a grounded component of the control system to dissipate the electrical charge as it develops.

3.1.5 Burn Hazards

Many gas streams treated in air pollution control systems are very hot. The ductwork surfaces and measurement ports are often more than 500 °F. Therefore, direct contact can quickly lead to a painful burn. The port shown in Figure 3-1, is located between the side wall and a large flange. A painful burn could occur while opening the port since both the side wall and the flange are above 400 °F. Unfortunately, many ports are located in such a manner that a burn is likely while working with portable instrumentation. The port should

preferably be located away from hot surfaces. A short extension nipple moves the inspector away from the hot surface of the duct itself and also moves activity away from hot adjacent surfaces. A layer of insulation on the duct reduces the chances of direct contact while also reducing the radiant energy from the duct.

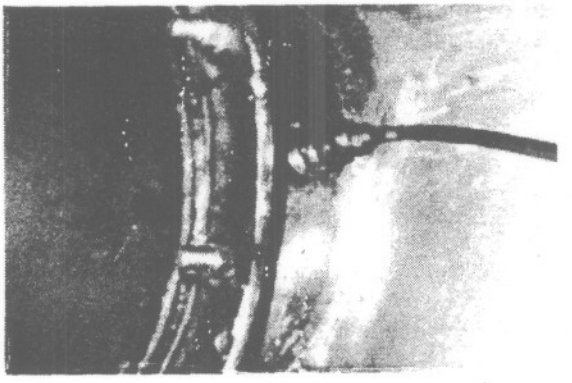

Figure 3-1. Port Located Near Burn Hazards

3.1.6 Transducers

The ports must not be mounted along with differential pressure (D/P) transducers. Figure 3-2 illustrates a D/P transducer with a 1" line leading to the port and a 2" pipe welded to the side of the wet scrubber. While the 2" plug on the front side of the tee looks like a useable port, opening it would affect the pressure sensed by the transducer. It is quite possible that the low pressure signal generated by the transducer could be interpreted as a major upset by the automated process control system which would then trip off the system components. Actually, the 2" plug is not intended as an inspection measurement port but rather as a means for routine cleaning of the port deposits. The inspection port should be located away from the transducer port so that false static pressure signals are not transmitted.

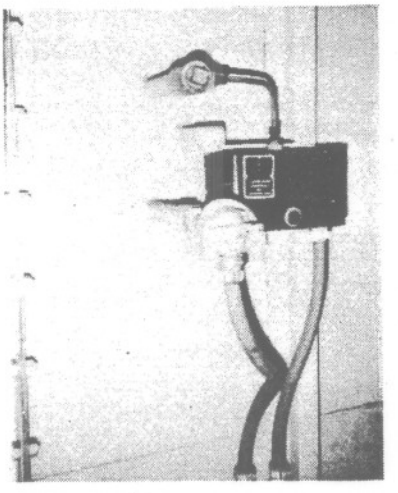

Figure 3-2. Clean-out Port for D/P Transmitter

3.1.7 Stuck Port Caps

The most difficult part of any sampling or measurement exercise is the removal of the large 4" pipe caps often used to close off the port. Normally these must be removed by heating with a torch or by use of a large pipe wrench with a several foot pipe extender. The latter approach is taken at the risk of ripping off the entire port nipple.

3.2 RECOMMENDED PORT DESIGNS

Port design and siting criteria have been compiled which should minimize the measurement problems and safety hazards of many existing ports. These criteria should be satisfied to the extent possible on all new systems and on existing collectors where ports are being installed. The recommended port designs presented later in this section satisfy these criteria.

3.2.1 Criteria of Good Inspection Measurement Ports

The general criteria for good measurement ports are described here. Due to the different types of measurements required at different locations in an air pollution control system, it is necessary to list somewhat different criteria for ports mounted on the walls of the collector and ports mounted on ducts before and after the collector.

3.2.1.1 Ductwork Ports - These ports must accomodate a pitot tube which is used not only for gas flow measurement but also: (1) as a thermocouple support when traversing the duct, (2) as a static pressure probe when traversing the duct, and (3) as a sampling tube when analyzing gas stream oxygen, carbon dioxide and carbon monoxide levels. The general guidelines regarding ductwork ports are discussed below.

1. Accessibility - Access platforms and ladders should meet OSHA requirements.

2. Port Locations - The ports should be located at least 2 duct diameters downstream and at least 1/2 duct diameter upstream from any flow disturbances. The ports should be as far from the flow disturbances as conveniently and economically possible to minimize the number of sampling points necessary to characterize flow and composition.

3. Port Spacing on Rectangular Ducts - The number of ports necessary on a rectangular duct depends on the distances from the upstream and downstream disturbances. EPA Reference Method 1 requirements should be satisfied.

4, Port Diameter - The ports should not have an internal diameter exceeding 2 inches. All probes can fit through a port of this size. Larger ports have greater air infiltration (negative static pressure) or greater potential for pollutant exposure (positive pressure).

5. Partially Confined Areas - The ports should not be located in areas which are prone to pollutant accumulation due to poor natural ventilation.

6. Large Rectangular Ducts - Ports are needed on each vertical side which exceeds 6 feet. The maximum extension distance of pitot tubes in common use is 6 feet.

7. Round Ducts - Two ports spaced 90° apart should be located on round ducts. If they exceed a diameter of six feet, then four ports spaced equally around the duct are necessary due to pitot tube reach limits.

8. Exposed Locations - The ports should not be located above plant equipment or vents which could suddenly release either steam or pollutant laden gases which could engulf the sampling area. The ports should not be in the immediate vicinity of components of the ductwork prone to leakage, such as expansion joints.

9. Hot Surfaces - Hot surfaces in the vicinity of the port should be insulated to reduce the chance of direct contact and to reduce the radiation rate.

10. Port Caps - Easily removed port caps should be used.

11. Static Electricity Bonding - The port must be designed to inherently provide a bonding path from the probe to the duct. There must also be provisions for the use of a grounding/bonding cable.

12. Pluggage - The port should be located in areas which are not prone to pluggage. Orientation of the port should minimize build-up of material.

13. Port Sealing - There must be effective ways to minimize gas flow out of positive pressure ports during the use of the portable instruments. There must be effective ways to minimize air infiltration into negative pressure ports.

3.2.1.2 Collector Wall Ports - The ports used on the walls of the air pollution control device are quite different since there is rarely a need to traverse the internal space. All of the measurements done on fabric filters, mechanical collectors, and wet scrubbers can be done using only a 1/4 inch diameter probe. The criteria for these ports are presented below:

1. Accessibility - There must be safe and convenient access to the port location on the collector wall so that it is possible to rod out the port prior to the measurement. All ladders and platforms should meet OSHA requirements.

2. Connecting Tubing - There should be no permanently mounted connecting tubing from the port to a "convenient" measurement location. It is impossible to obtain representative temperature data after the gas passes through the long tubing.

3. Differential Pressure Transducers - The port should not be directly connected to a differential pressure transducer. Opening the port to make the measurement could result in a false signal to the process control equipment.

4. Extension Tubing - When extension tubing inside the unit is necessary to connect a port to an internal area of the collector, this tube should be straight so that it can be rodded out prior to the measurement.

5. Size - The port should have an internal diameter between 1/4 inch and 1 inch. It should be only as large as necessary to accept the specific probes to be used.

6. Partially Confined Areas - To the extent possible, the ports should be located in well ventilated areas, where accumulation of pollutants is unlikely.

7. Pluggage - The ports should not be located in areas prone to pluggage. Orientation of the port should minimize the accumulation of materials in the port recess.

8. Moving Equipment - The ports should not be located near moving equipment such as shaker assemblies and fan sheaves.

9. Air Infiltration - To the extent possible, the ports should be located away from common sites of air infiltration such as large access hatches.

10. Hot Surfaces - To the extent possible, the port should extend outward away from hot collector wall surfaces to minimize the risk of direct contact.

3.3 PORT DESIGNS

Ports which satisfy the criteria presented earlier are discussed in this section. Several relatively large ports are proposed for areas where a complete traverse of a gas stream is necessary. A simple 1/4 diameter port is proposed for collector walls and other areas where measurements close to the interior surface are sufficient. A special port which has interior extension tubing is also proposed for certain types of fabric filter systems. This is presented since this design would permit the installation of ports in safe locations without the need for additional ladders and platforms, both of which can be expensive.

3.3.1 Small Ports

These ports are intended for static pressure, gas temperature and oxygen/carbon dioxide measurements at various positions on the control systems listed in Table 3-1.

Table 3-1. Locations for Small Ports

Application	Location of Ports
1. Pulse Jet Fabric Filters	Above and Below Tube Sheet
2. Mechanical Collectors (Multi-Cyclone Designs)	Above and Below Clean Side Tube Sheet.
3. Particulate Wet Scrubbers	Before and after Trays, Beds, and Restricted Throats
	Before and After Demisters
4. Reverse Air Fabric Filters (Cylindrical Shell, Outside-to-Inside Flow Designs)	Above and Below Tube Sheet
5. Hoods	Immediately After Converging Section.
6. Ductwork	Various locations

A sketch of the recommended port configuration for these applications is presented in Figure 3-3a. This is constructed of a Swagelok pipe weld connector. A 3/16 inch weld around the circumference provides a gas tight seal and holds the port fitting to the collector wall. The compression of the O-ring against the probe and against the fittings prevents any leakage of gas out of the port. Air infiltration in negative pressure situations is also negligible.

For areas where sludge or liquids occassionaly accumulate on the inner surface of the duct, the port can be inclined to facilitate drainage. This is illustrated on the upper right side of Figure 3-3b. A port cap, as shown in the lower right of Figure 3-3c, can be used to seal the 1/4 inch port. This prevents material accumulation in the port recess when the port is closed and it also prevents air infiltration (negative pressure situations) into the collector. In the case of fabric filters, this localized air infiltration could cause some corrosion and some acid condensation related bag damage.

3.3.2 Small Ports with Extension Tubes

There are several common types of fabric filters for which it is very difficult to arrange the measurement ports. In the large, multi-compartment reverse air (inside-to-outside flow) and shaker collectors, the tube sheet separating the "clean" from the "dirty" side is mounted directly above the hoppers. The walkways are almost always above the elevation of the tube sheet. Therefore, the ports must supposedly be below the walkway. There is often an elbow fitting below the walkway which connects the port to a tube leading above the walkway area. This does not satisfy one of the main criteria in that accessibility to the port is not available. Since this part of the hopper area is prone to solids accumulation, this failing is especially troublesome.

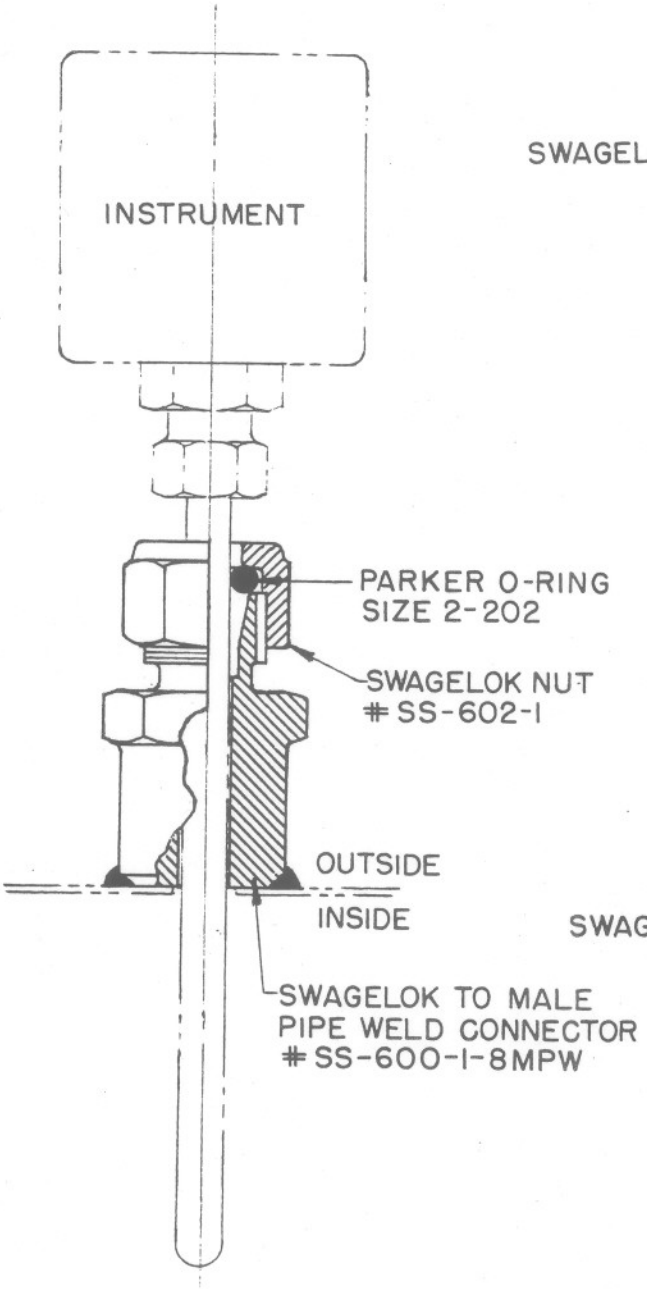

Figure 3-3a. 1/4" Port With Seal Nut Clamp

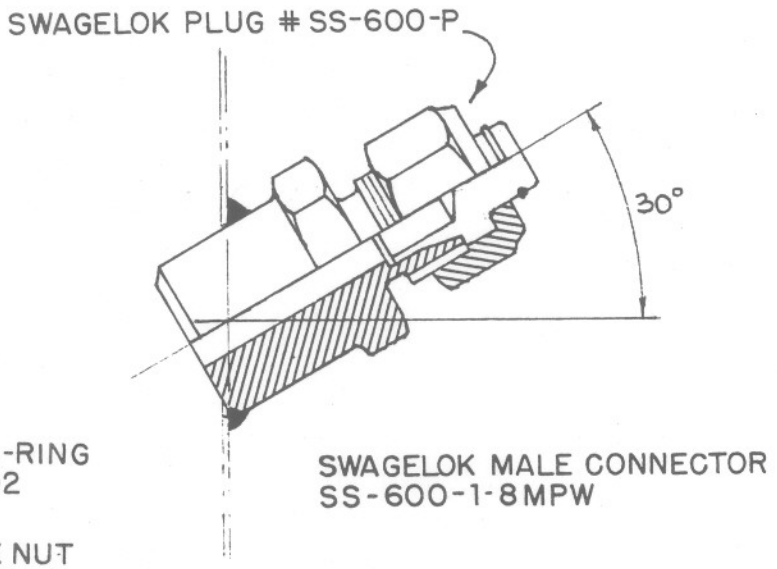

Figure 3-3b. 1/4" Port With Standard Plug

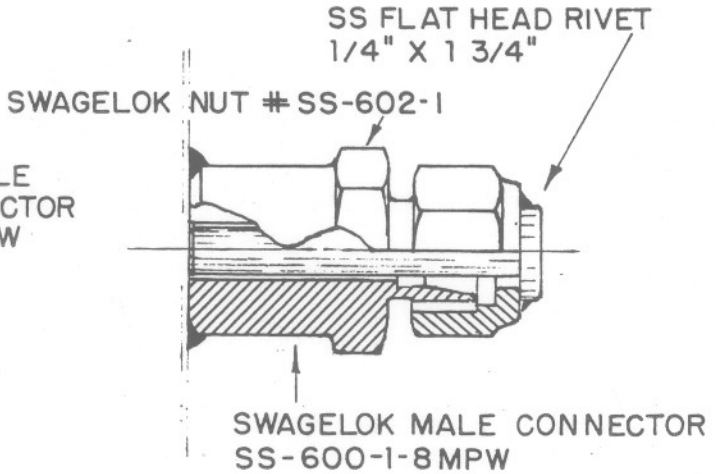

Figure 3-3c. 1/4" Port With Stem Type Cap

Figure 3-9. 1/4" Measurement Port

The recommended means for installing the port for these types of collectors is shown in Figure 3-4. In this case, the port is mounted on a section of 3/8 inch IPS Schedule 40 pipe which extends inside the fabric filter from below the tube sheet to a position outside the collector shell. The pipe terminates at a position above the walkway so that there is good accessibility for rodding out the extension pipe. The extension pipe must be positioned so that it passes between the bag thimble or snap ring connections on the tube sheet. The 60° angle minimizes the length of pipe needed and ensures that the port will not extend very far out into the walking area.

The pipe must be welded completely around the circumference on the lower side of the tube sheet. Failure to do this will result in dust leakage through the gap and may invite crevice corrosion. The pipe must also be welded on the outside of the collector wall. A mounting plate has been provided at this position to facilitate the welding. The remainder of the fittings and the cap are identical to that described earlier for standard small ports. The O-ring seal provides the necessary protection against positive pressure gas leakage.

The "clean" side port for the compartment should be mounted horizontally in the same general vicinity of the "dirty" side port shown in Figure 3-4. This is a standard small port without any extension pipe.

A port similar to that described in Figure 3-4 can be used for top access type pulse jet fabric filters. With these collectors, the tube sheet which separates the "clean" side from the "dirty" side is mounted close to the top of the baghouse. There is good accessibility to the top of the unit due to the need to routinely service the diaphragm valves and to replace bags. However, there is rarely any access to the side of the collector where the ports should logically be placed. Nevertheless, some ports have been installed along the side, usually in a spot that can not be reached through the ladder cage.

An alternative design for these ports is similar to that shown in Figure 3-4. In this case, both of the ports are located on the roof of the pulse jet baghouse. The "dirty" side port has an extension pipe which passes through the roof of the collector, down through the clean air plenum, and through the tube sheet. The tube is welded entirely around the circumference of the tube sheet to prevent gas leakage. The cap with an O-ring seal is identical to that described in Figure 3-3. The "dirty" side port is located directly above a portion of the tube sheet which is equidistant from the bags and bag clamps. By placing the port between the access hatches, the port should not present a trip hazard. The "clean" side port is located close to the "dirty" side port. It consists of a fitting identical to that shown in Figure 3-3. The main disadvantages of this arrangment include burn hazards on the access hatch and potential errors due to air infiltration. These are outweighed by the improved accessiblity available at this location.

3.3.3 Standard Large Inspection Measurement Ports

These ports accept pitot tubes either for gas flow measurement or for traverse checks of static pressure, gas temperature or gas composition. They would be used on all ducts greater than 2 feet diameter.

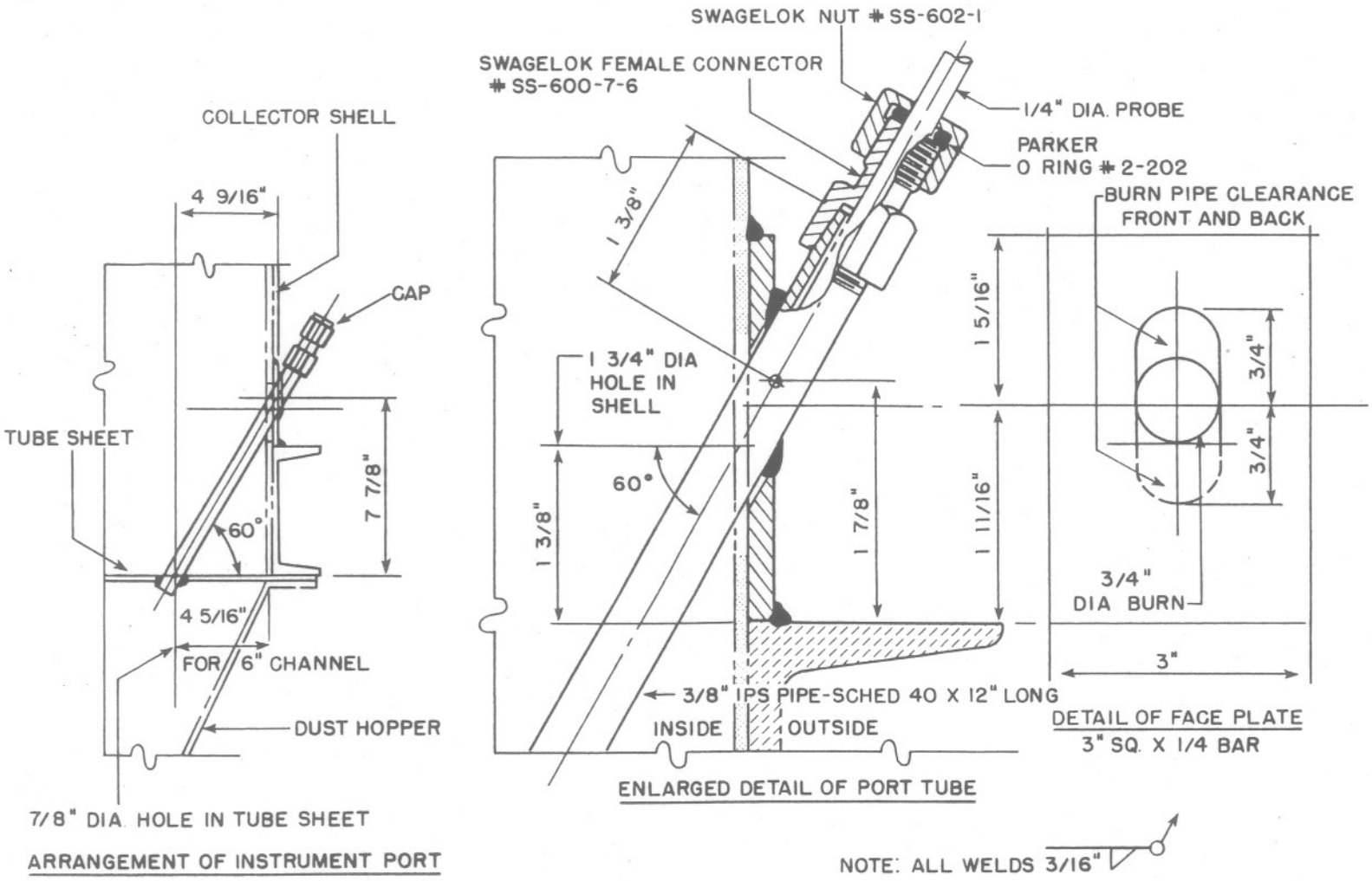

Figure 3-4. 1/4" Port With Extension Tube

A description of the S-Type Pitot Tube must be presented before the large port design can be discussed. The modified S-Type Pitot Tube is shown in Figure 3-5. This consists of the typical 3/8 inch diameter parallel tubes with a flared sensor end having a width between 1 and 1 and 1/2 inches. There is also a 3/16 inch diameter thin wall tube which protects the permanently mounted thermocouple wire. The major difference between this pitot tube and conventional pitot tubes is the 1 and 5/16 inch O.D. tube which encloses the pitot pneumatic lines and thermocouple line. The outer tube facilitates use of an O-Ring seal described in a later drawing. This tube can fit over an existing pitot tube. To prevent gas leakage up through the tubes, bulkhead fittings should be welded to either end. A support bulkhead is also necessary in the middle of the pitot tube. This sleeve adds less than 1 pound per foot to the pitot tube weight.

The pitot alignment sleeve and port are shown in Figure 3-6. The port is a 4 inch section of 1 and 1/4 inch IPS pipe having a wall thickness of 0.140 inches. It is welded to the duct wall on one end. The other end is welded to a 1/4 inch thick mounting flange. The pitot is supported in an outer flange with a 1 and 3/8 inch hole through the center. As shown in Figure 3-6, a thumb screw is mounted at the top of the outer flange to hold the pitot at a designated measurement point. The outer flange collar has score marks 20° in either direction from the vertical so that the pitot tube rotation can be checked while making minor adjustments for cyclonic flow. The bolts should be tack welded to the inner flange so that they do not have to be removed while opening the port. The nuts on the outer flange should be coated with an anti-seizing compound.

The port and pitot tube collar maintain the pitot tube in a level position so that pitch error is negligible even when the pitot tube is fully extended. The score marks on the collar also help the inspector to avoid any yaw errors. The O-ring seal resting on the shoulder of the inner flange provides a gas tight seal while the instrument is inside the port. During times when the port is being opened and closed there obviously is no way to prevent some gas leakage. However, with this small port design, the quantity of gas flowing outward (positive pressure situations) would be less than 10% of that for conventional 4 inch ports.

The port can be sealed during periods of nonuse with a 4 and 1/2 inch piece of stainless steel bar, 1 and 5/16 inches in diameter. This completely fills the port recess so that solids and sludge can not accumulate. This should also be coated with a small quantity of anti-seizing compound. This bar is welded to a small flange which attaches to the inner flange of the port.

While the measurement is being made, the entire port recess is filled. This reduces the possibility of unusual flow patterns close to the port area due to the disturbance caused by the discontinuous inner surface of the duct. Therefore, this arrangement causes less aerodynamic disturbance than typical stack sampling ports.

The pitot tube is self supporting, thereby freeing the inspector's hands for recording data. A convenient shelter for mounting the inclined manometer or low range diaphragm gauge is shown in Figure 3-7. There are small magnets

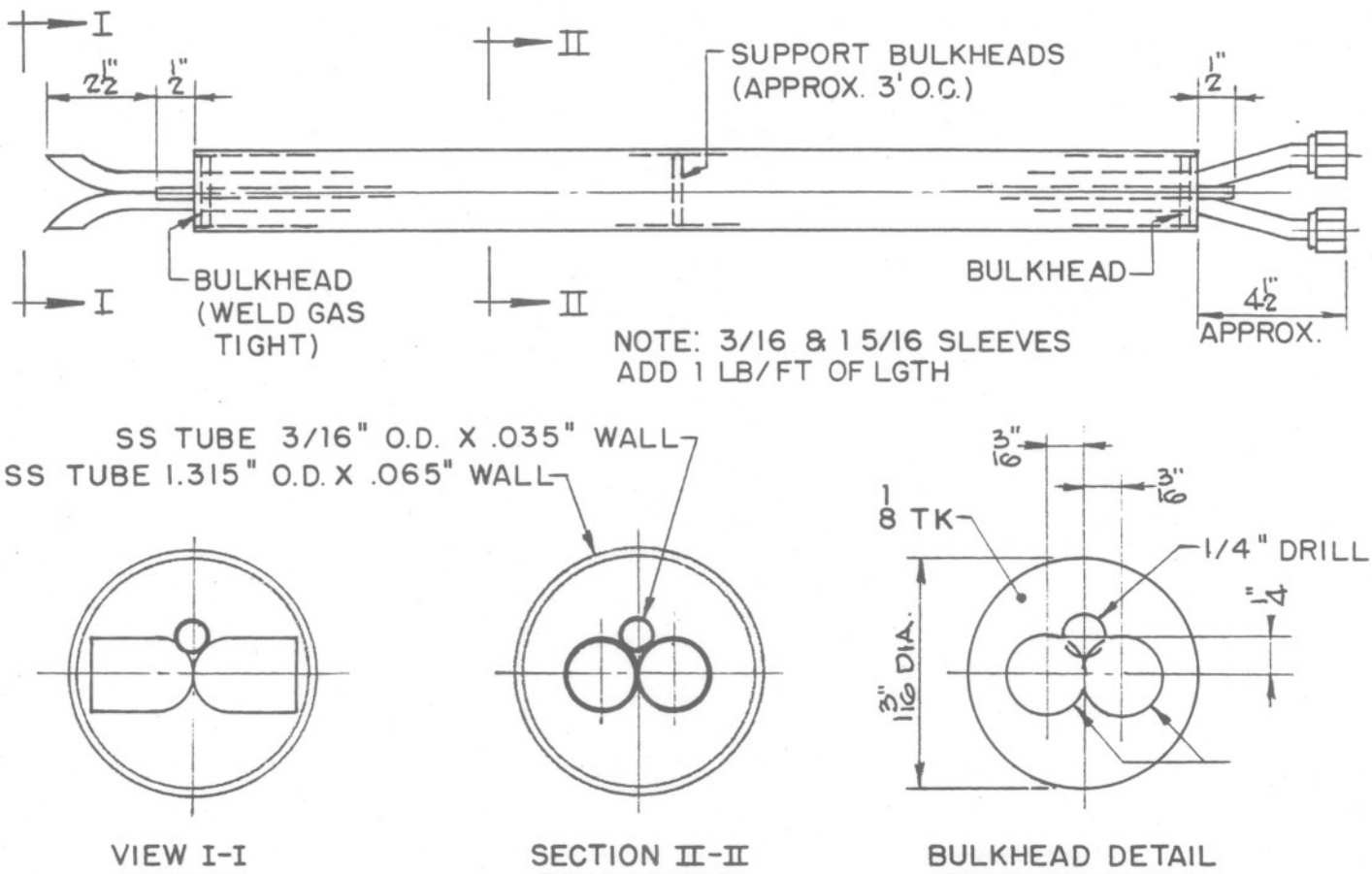

MODIFICATION OF 3/8" STANDARD S-TYPE PITOT TUBE

NOTE: 3/16" & 1 5/16" O.D. SLEEVES ADD LESS THAN 1#/FT OF PITOT TUBE LENGTH

Figure 3-5. Modified S-Type Pitot Tube

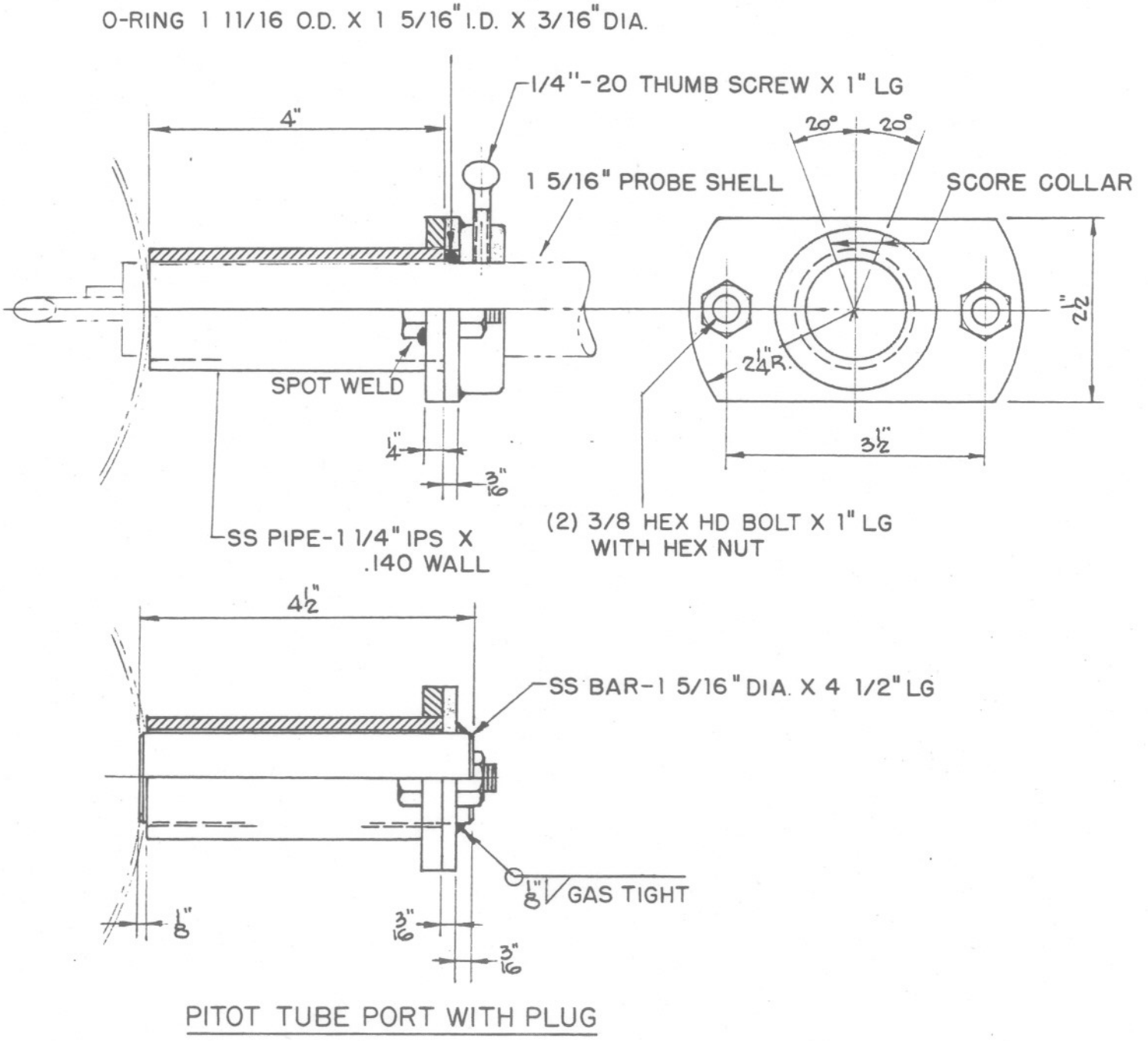

Figure 3-6. Pitot Tube Port and Sleeve

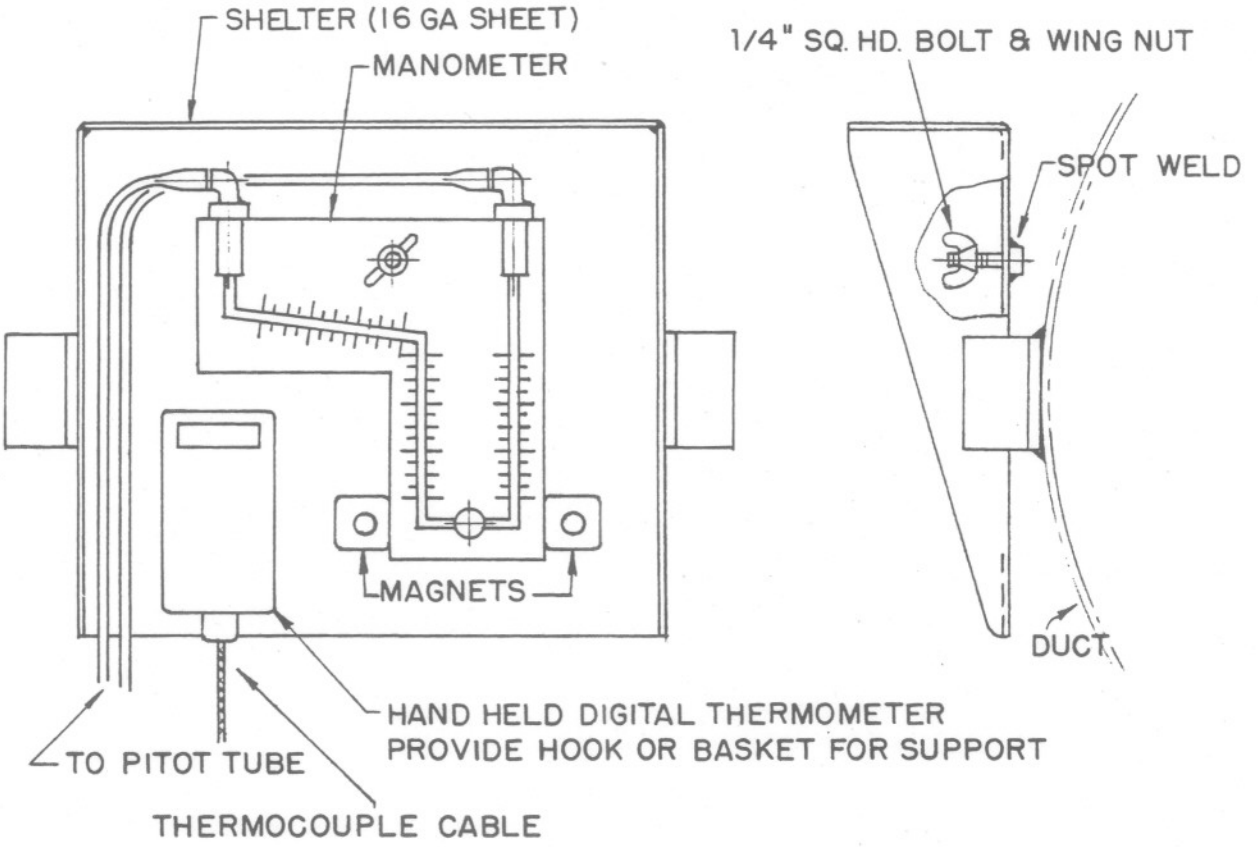

Figure 3-7. Pitot Differential Pressure Gauge Shelter

for leveling the inclined manometer. This shelter is an optional feature which is helpful when frequent pitot traverse are anticipated.

It should be noted that all commercially available pitot tubes could be used in these ports, with or without the mounting collar and sleeve. The advantages of the modifications shown are a substantial reduction in pitch and yaw errors, facilitation of checks for cyclonic flow, and protection from toxic pollutants under positive pressure conditions. These modifications to typical pitot tubes would increase the cost slightly due to more difficult fabrication steps. The total additional weight would be less than 1 pound per foot. Therefore, the portability of the pitot tube is not affected. The permanent parts included in each of the ports can be easily constructed out of commercially available fittings and materials. While more costly than the simple 4 inch IPS pipe nipples in common use, this port design provides for more accurate measurement and safer working conditions.

3.3.4 Modified Stack Sampling Ports

In some plants, existing stack sampling ports are at some of the locations useful for evaluation of system conditions. It is also possible that plants will want the flexibility to conduct EPA Reference Method stack tests at the locations chosen for inspection measurement ports. It is also possible that the plants will want the capability to use pitot tubes with replaceable tips. This section presents recommendations for ports which satisfy most of the design criteria discussed earlier, while allowing for large stack sampling probes and/or replaceable tip S-type pitot tubes.

The port design is illustrated in Figures 3-8 a,b and c. The top sketch, Figure 3-8 a, is the port which would be used in a location where there is no existing 4 inch port. An 11 inch piece of IPS Schedule 40 pipe is welded to a flange constructed of 1/2 inch plate. A 4 inch diameter hole is made in this flange and the surface is hand ground to be flush with the inner surface of the pipe. After burning or cutting the necessary hole in the collector or duct wall, the 4 inch IPS Schedule 40 pipe with flange is welded to the exterior of the wall. Both of the welds should be 1/4 inch gas tight welds.

The pipe flange includes two 1/2 inch - 13 NC x 2 inch long square head bolts. These are tack welded to the back side of the pipe flange so that they do not have to be removed when opening and closing the port.

When there are existing 4 inch ports in the desired location, it is a simple matter to modify these to facilitate inspection measurements. For those with a female IPS pipe thread, 4 inch IPS Schedule 40 pipe with one end threaded can be used. This is illustrated in Figure 3-8b. As before, a flange is installed on the other end to accept the pitot fittings discussed in later sketches. Existing ports having a 4 inch male IPS fitting can be converted using a 4 inch standard pipe coupling, as shown in Figure 3-8c. Again it is necessary that the main body of the port be a 4 inch pipe with one end threaded. The coupling should be allowed to seize or corrode into position since it will not be removed and since rotation is not desired.

A drawing of the replaceable tip S-type pitot tube is provided in Figure 3-9. It has two unions connecting the 3/8 inch O.D. tubes. This allows for

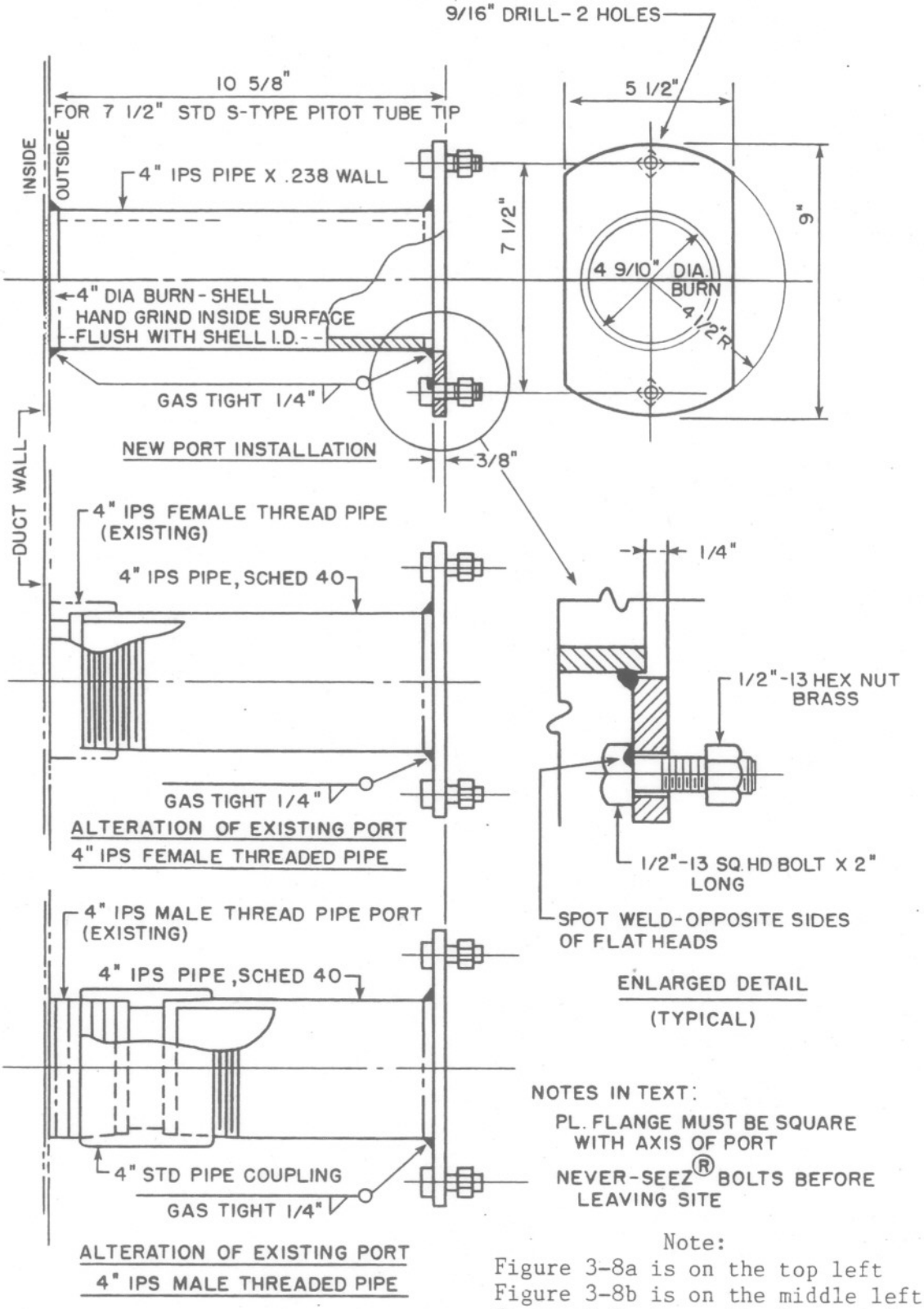

Note:
Figure 3-8a is on the top left
Figure 3-8b is on the middle left
Figure 3-8c is on the lower left

Figure 3-8. Modified Stack Sampling Ports.

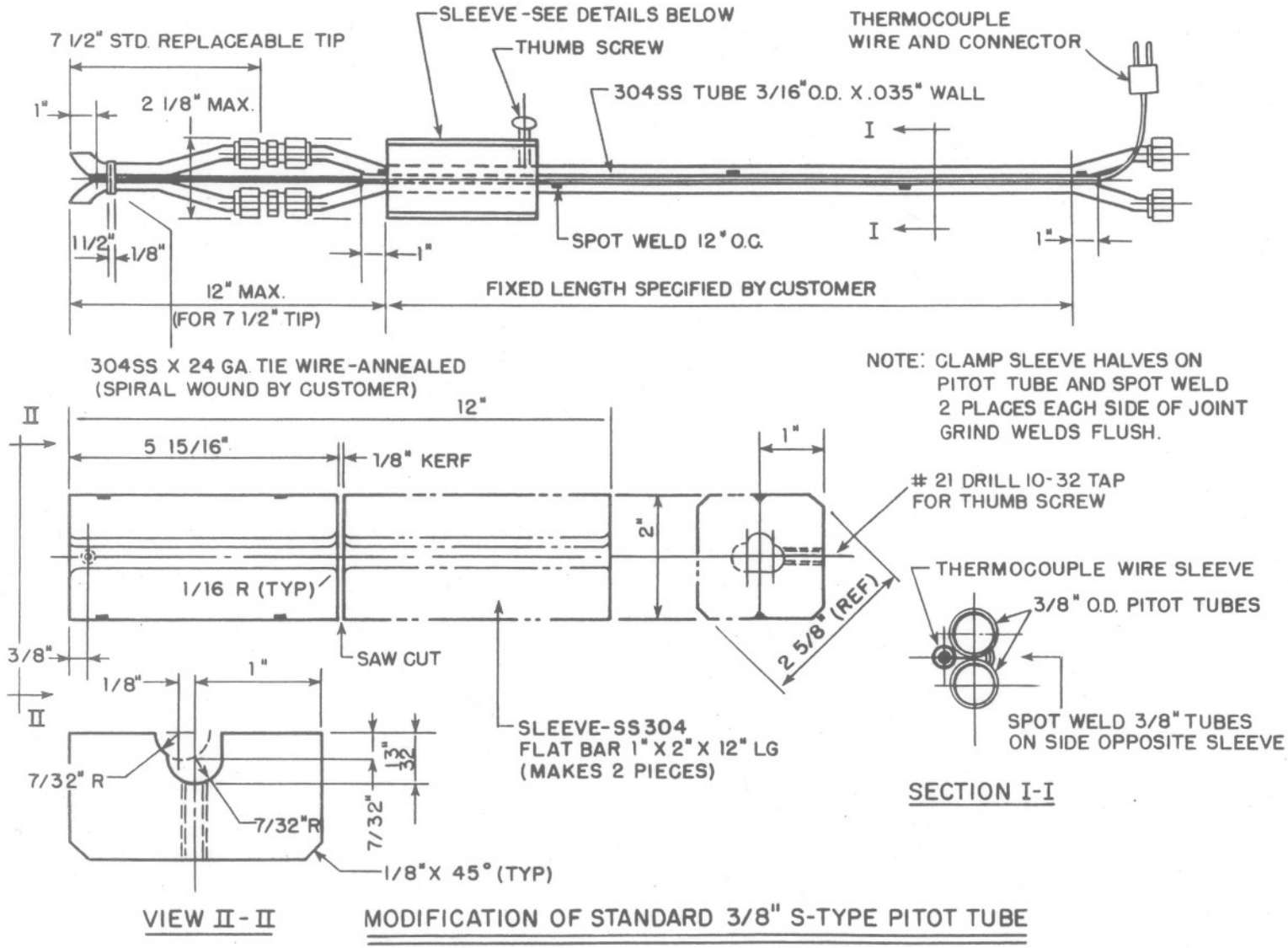

Figure 3-9. S-Type Pitot Tube with Replaceable Tip Shown With Alignment Sleeve

replacement of the tip in the event that it is damaged during use or shipment. The distance from the tip to the end of the caps (which attach to the unions) is approxiamately 7 and 1/2 inches. The width of the pitot tube at the unions is approximately 2 and 1/8 inches. It is this width which prevents use of the replaceable tip S-type pitot tubes in the port described in Figure 3-4. The long port bodies presented in Figure 3-8 were sized so that the wide portion of the pitot tube around the union fittings would fit within the port recess. Alignment and support necessary to prevent measurement errors are now accomplished by an external mounting sleeve.

The manner in which an S-Type pitot tube would be mounted in the port is shown in Figure 3-10. A pitot mounting bracket is secured to the port flange by means of the two 1/2 inch bolts. This bracket includes a square sleeve which extends backward 5 inches. This is designed to hold the mounting sleeve attached to the pitot tube.

The pitot mounting bracket, shown in Figure 3-11, is a piece that would be brought by the inspector to the plant, assuming that the plant is using the standard fittings and port design shown. It consists of a 9 inch diameter 1/4 inch thick plate with a hole of 2 and 1/4 inches cut through it. A 5/8 inch section of 3 and 1/2 inch IPS Schedule 40 pipe is welded to the back side of the plate to serve as a guide as it is inserted into the pipe flange shown in Figure 3-9. The front of the flange has a 5 and 1/2 inch long piece of 2 and 1/2 inch square tubing. It is this square tubing which serves as the holder for the pitot tube sleeve. The square tube is welded entirely around the circumference while the 3 and 1/2 inch round pipe is simply tack welded at four locations.

The pitot sleeve is illustrated in Figure 3-9. This is simply a 5 and 5/16 inch long, 2 and 1/2 inch diameter square bar which has holes for the pitot tube and thermocouple wire tube. This is placed around the pitot tube and the two halves are tack welded together. The pitot tube should move freely through this sleeve. Gas flow leakage through the gap will be minimal under moderate positive pressure conditions.

The mounting flange includes the enlarged bolt holes so that it is possible to rotate the probe slightly in the event of cyclonic flow. There is also a neoprene gasket to seal off any leakage around the mounting flange.

There are two alternatives for closing the modified stack sampling ports when not in use. An insert as shown in Figure 3-10 can be used to completely fill the recessed area. This is simply a 4 inch IPS Schedule pipe welded to a blank 1/4 inch thick plate. This front plate has two 5/8 inch holes so that it can be mounted on the protruding 1/2 inch bolts welded to the permanent port body. At the end of the 4 inch port plug, there is a 3 and 5/8 inch diamter 1/4 inch plate which blanks off the end pointed toward the duct. In this way, there is no recess to allow the build-up of solids and sludge. To prevent corrosion of this pipe insert, an anti-seizing compound should be applied. For severe corrosion conditions when gas temperatures are below 500 °F, the insert can be constructed of teflon.

The second alternative is simply a 1/4 inch thick plate identical to that shown in Figure 3-10. Instead of being welded to the 4 inch pipe insert, it

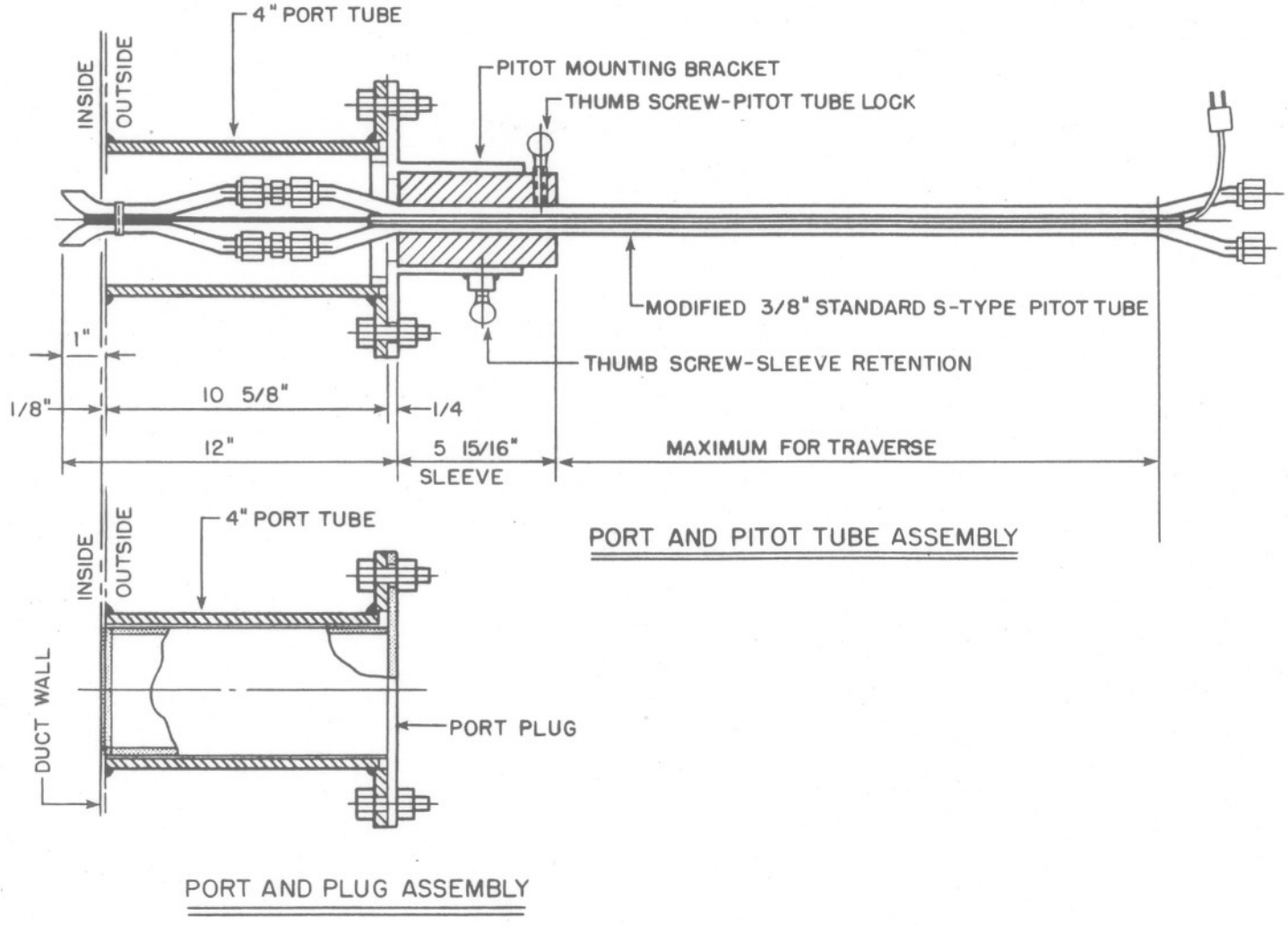

Figure 3-10. Modified Stack Sampling Port and S-Type Pitot Tube

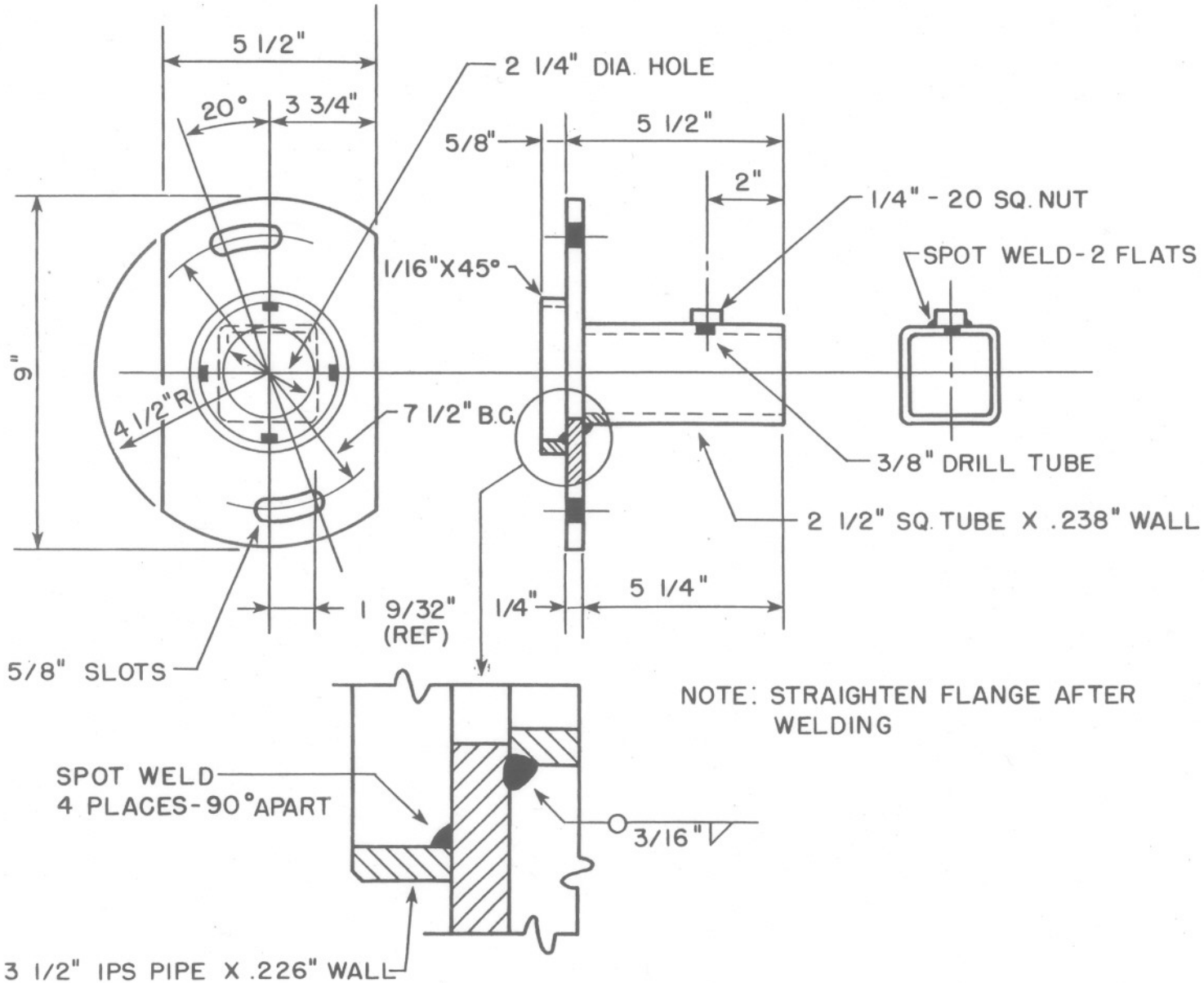

Figure 3-11. Pitot Tube Mounting Bracket

is attached directly to the port. This provides an easily removed seal. However, it does not prevent materials from accumulating in the port recess.

The parts chosen to seal the port during nonuse must be provided by the source. The mounting bracket and the mounting sleeve are brought by the inspector. Therefore, relatively few of these must be made. The total weight of the mounting bracket and mounting sleeve are estimated at 10 pounds. While this assembly greatly reduces the errors involved in pitot traverse and simplifies traverses for other measurements, it does require a port which extends out from the wall a distance of 11 inches. The is considerably greater than most present ports. Whenever possible, the smaller port described in section 3.3.3 should be used.

3.4 Port Locations

This section illustrates the preferred locations for the various types of measurement ports presented in Section 3.3. The control devices illustrated in the following drawings represent most of the common types of commercially available units.

3.4.1 Duct Ports

The pitot tube ports (see sections 3.3.2 and 3.3.3) should be placed in locations as far as possible from flow disturbances. On circular ducts which are equal to or less than 6 feet diameter (inside dimensions), there should be at least two pitot tube ports spaced 90° apart. On larger circular ducts it is necessary to have 4 ports spaced 90° apart so that conventional pitot tubes can be used. The number and spacing of pitot tube ports on rectangular ducts should be consistent with the requirements of EPA Reference Method 2. Again, it is necessary to include ports on both sides of the ducts if the width exceeds 6 feet.

A possible location for ports on the outlet duct of a pulse jet baghouse is shown in Figure 3-12. This has been located close to the ground to minimize the cost of the ladder and access platform. However, it must be far enough away from the fan to avoid flow disturbances caused by the duct elbow and the inlet damper of the fan. In the plan view sketch on the left side of Figure 3-12, it is apparent that there are two pitot tube ports spaced 90° apart and a small 1/4" port between these pitot tube ports. The small port is to facilitate gas temperature, static pressure, and oxygen concentration measurements. Similar pitot tube ports could be installed in the outlet ductwork of most other types of air pollution control systems.

The sketch on the right side of Figure 3-12 illustrates the arrangement of pitot tube ports in the stack. These are located 45° degrees from the platform center line so that there is adequate clearance for both ports. They should be located well upstream of the gas inlet to the stack. However, they should not be so high in the stack that downmixing is possible. The position shown in Figure 3-12 is the maximum height normally possible.

3.4.2 Port Locations for Fabric Filters

The types of ports used on fabric filters include both the standard 1/4" port and the 1/4" port with the extended tube. Good accessibility to the

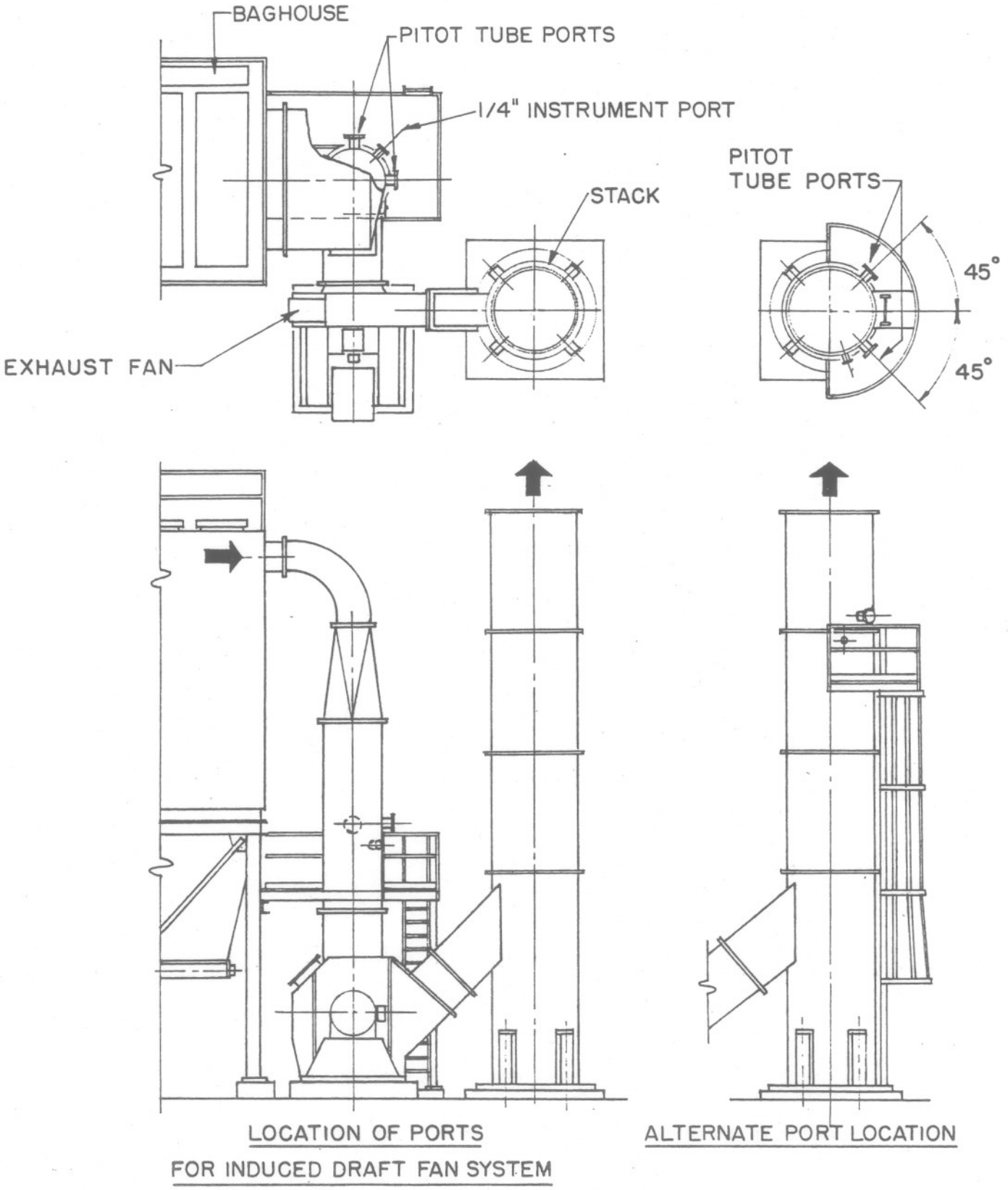

Figure 3-12. Location of Ports on Outlet Duct of Fabric Filter

port area is necessary so that it can be rodded out prior to the measurement and so that accurate gas temperature measurements can be made.

3.4.2.1 Pulse Jet Fabric Filters - The locations for 1/4" instrument ports for conventional top access pulse jet baghouses are illustrated in Figure 3-13. There are two "clean" side ports which pass through the top shell of the baghouse and terminate in the clean air plenum of the unit. Between these two is another 1/4" port which extends down through the tube sheet. These ports sense "dirty" side conditions. There is convenient access to these ports since it is necessary to perform all service work from the roof. It is easy to rod out the "dirty" side port since the extension tube is straight. They do not present a trip hazard and do not present an obstacle to bag maintenance and replacement. These ports must be located at a position which is opposite to the direction which the hatches swing when opened. This varies from unit to unit.

The only disadvantage of this location is the potential for burns on the hand while removing the port caps on baghouses operating at elevated temperatures. This problem is easily avoided by wearing gloves. The gloves are necessary for other inspection activities. Therefore, this is not a burden for regulatory agency personnel.

For pulse jet baghouses having "dirty" side access only, there must be a platform near the access hatch. The standard 1/4" ports should be installed above and below the tube sheet which is normally slightly above the top of the access hatch. In fact, this is the location selected by manufacturers of these baghouses. The only disadvantage of this location is that the inspectors must exercise restraint when rodding out the "dirty" side port since it is possible to puncture a bag near the port.

3.4.2.2 Reverse Air (Outside-to-Inside Flow) Fabric Filters - These units often have a rotating cleaning arm in the clean air plenum. This precludes the use of the extender pipe shown in the pulse jet baghouse sketch. The "dirty" side port location must be below the elevation of the tube sheet, as shown in Figure 3-14. This means that a small platform must be provided in the area of the port. The "clean" side port can be cut through the top shell since this will not interfere with the bag cleaning equipment. Since bags hang in the proximity of the "dirty" side port, it is again necessary to rod out this port carefully. It should be noted that the ladder to the top of the baghouse is necessary for general maintenance. Only the small lower platform must be added.

3.4.2.3 Shaker and Reverse Air (Inside-to-Outside Flow) Fabric Filters - These fabric filters generally have a number of individual compartments. The small ports must be placed on each of these, as shown in Figure 3-15. The "clean" side port is the standard 1/4" fitting mounted on the exterior wall above the tube sheet. It should be placed at elevation which is convenient for using the portable instruments. The "dirty" side port must include an extension tube which passes through the clean gas plenum and terminates below the tube sheet. It must have a gas tight weld on the lower side of the tube sheet to prevent gas sneakage through gaps. A straight tube is used so that it can be easily cleaned out before any measurement. The entire assembly is oriented on a 60° angle so that the port cap does not extend into the normal

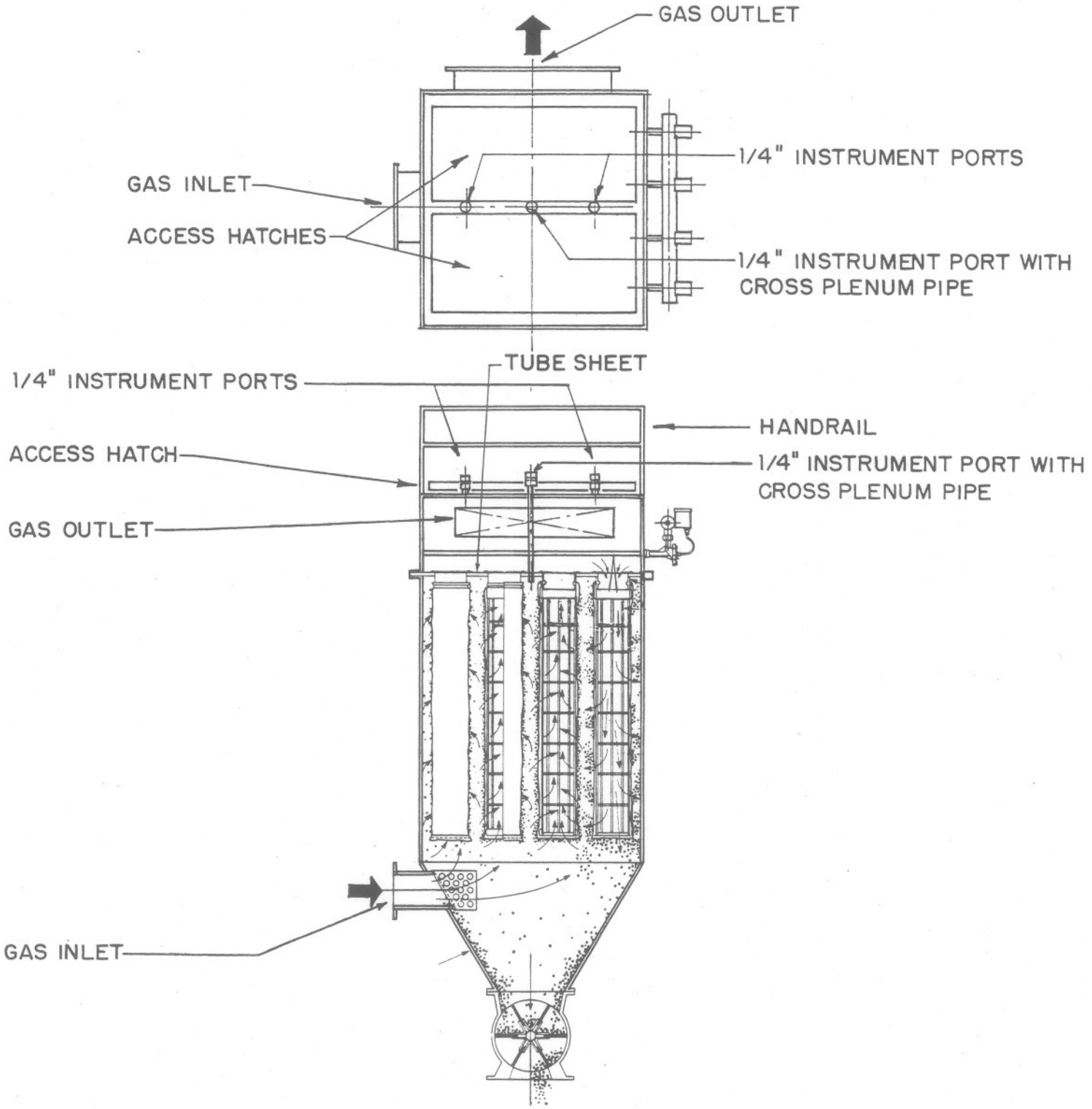

Figure 3-13. Instrument Port Location for Pulse Jet (or Plenum Pulse) Baghouse

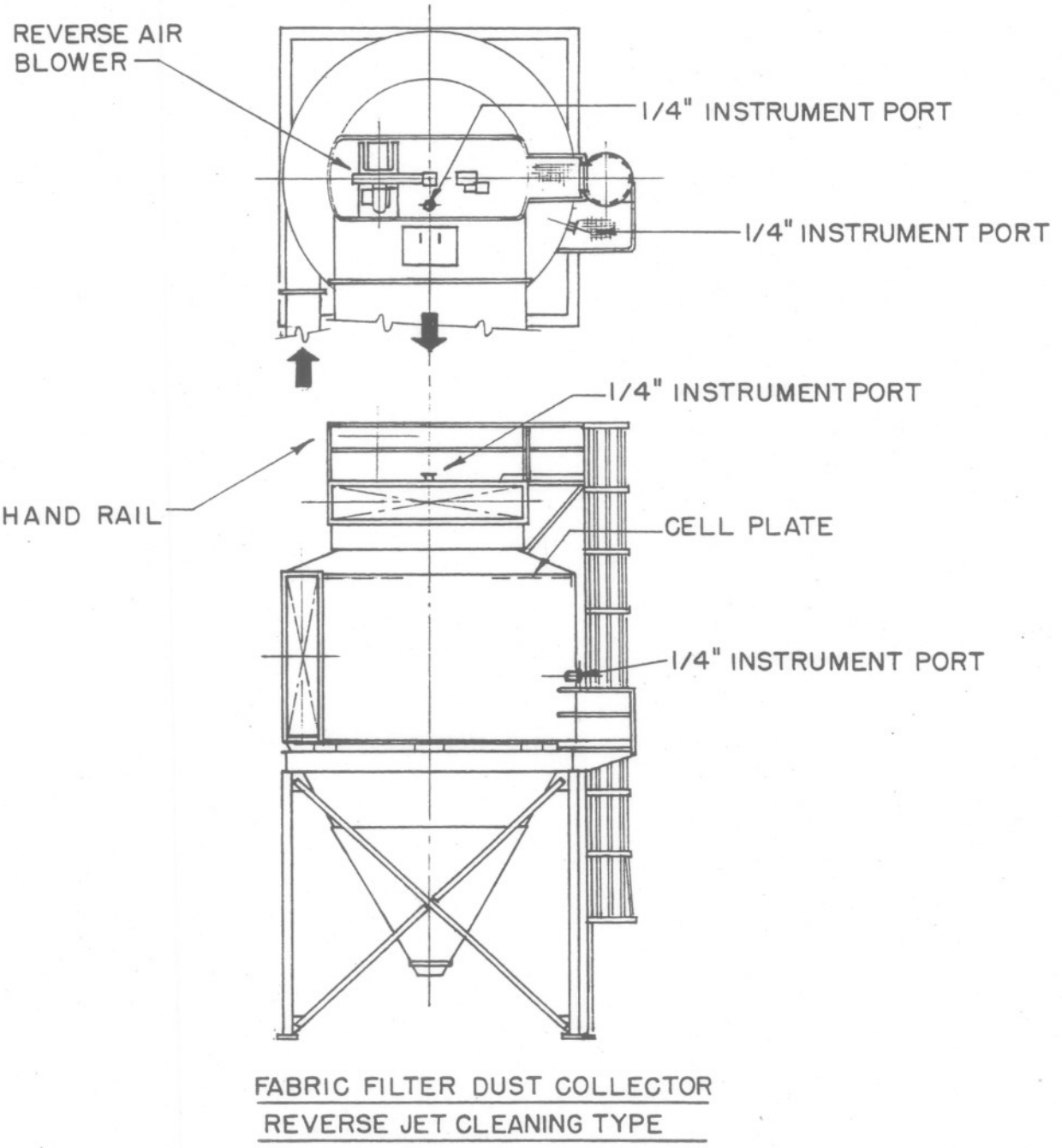

Figure 3-14. Location of Ports on Reverse Air Fabric Filter (Outside-to-Inside Flow)

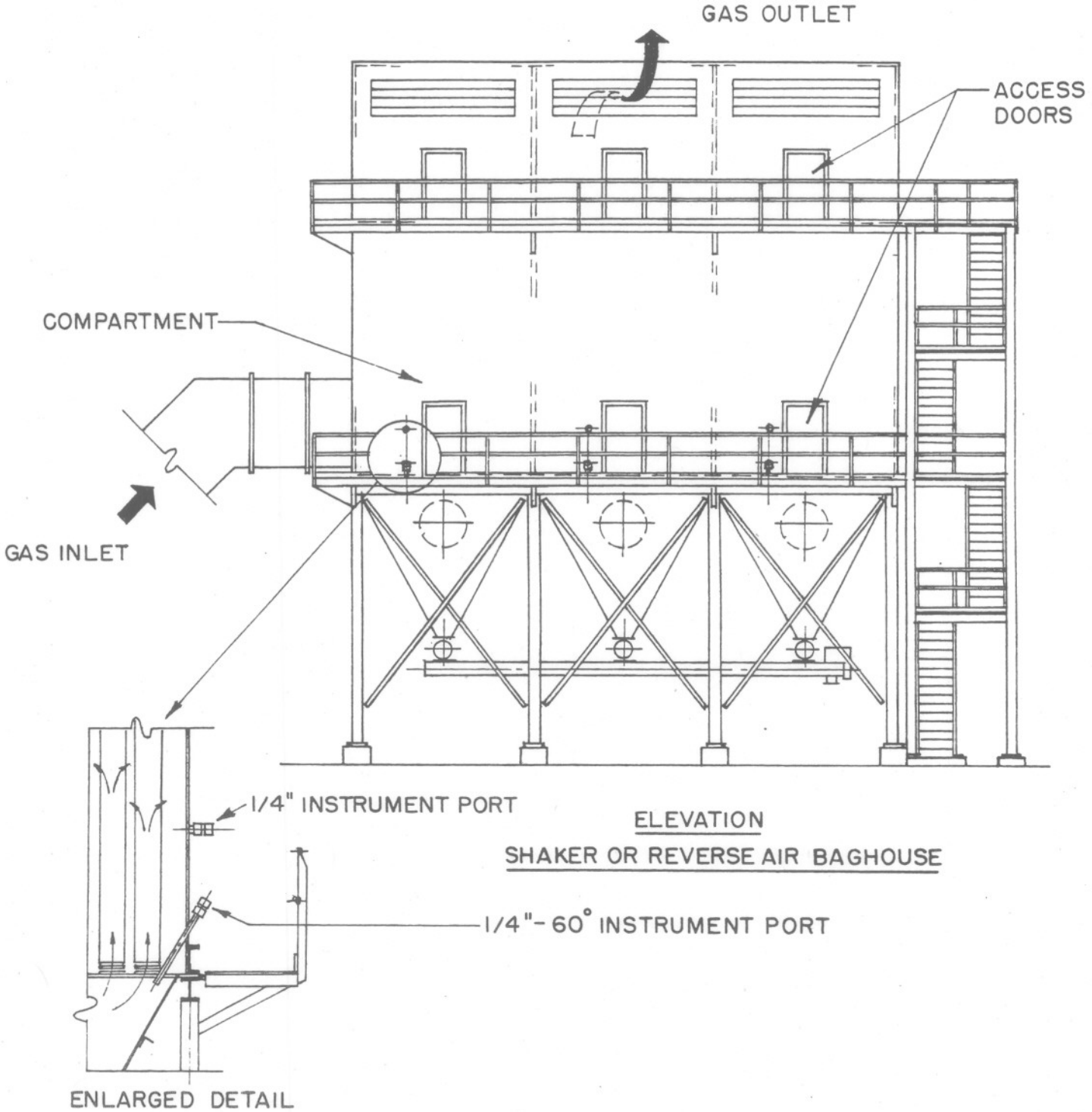

Figure 3-15. Location of Ports on Reverse Air and Shaker Fabric Filters

walking area. As shown in the side elevation view, these ports are located on each of the compartments in the unit. Not shown here are the pitot tube ports which would be necessary on the inlet ductwork to this collector.

3.4.3 Ports for Electrostatic Precipitators

Ports should not be installed on or near the shells of electrostatic precipitators. A high voltage arc to a probe could occur if the port were close to the energized portion of the precipitator. Measurement ports can be located only in the inlet and outlet ductwork or in the stack. All downstream ports should be equipped with grounding taps and cables since the charged particles passing the probes can result in very high static charges on these probes.

In the very large majority of cases, there are adequate stack sampling ports before the precipitator and in the stack. These should be used, if possible. The modified port design illustrated in Figures 3-8 to 3-11 will aid accurate pitot tube traverses and minimize the exposure to potentially toxic pollutants.

3.4.4 Ports for Mechanical Collectors

Small ports should be installed above and below the "clean" side tube sheet of multi-cyclone collectors. The platforms should allow safe access to the ports. It is generally necessary to include 6" extension pipes on the exterior of the unit to penetrate insulation around the mechanical collector. The end of the pipe should resemble the port shown in Figure 3-3.

Pitot tube ports should be installed upstream and downstream of the unit at locations where there is safe access. The downstream port should be before the induced draft fan, if possible. The upstream port should be close to the multi-cyclone collector inlet so that the measurements can isolate air infiltration and gas flow resistance for only the collector and not other common components such as economizers and air preheaters.

3.4.5 Ports for Wet Scrubbers

A combination of small 1/4 inch ports and pitot tube ports is used to evaluate wet scrubber performance. The small ports are placed between all beds and stages to measure static pressure changes across each. These are also used before and after demisters to identify demister pluggage. The pitot tube ports are located on the ductwork before and after the scrubber vessel. They are used to measure gas flow rates, to evaluate scrubber vessel air infiltration, and to conduct reentrainment tests.

3.4.5.1 Spray Tower Scrubbers - The inlet ductwork pitot tube ports should be situated upstream of any spray headers in order to minimize droplet impaction on the probes and to minimize pluggage of the ports. A parallel set of small ports is provided along side the pitot tube ports so that some measurements can be made without opening the larger ports. This is particularily important when the unit is under positive pressure. The small ports do not add any significant cost to the small platform assembly shown in Figure 3-16.

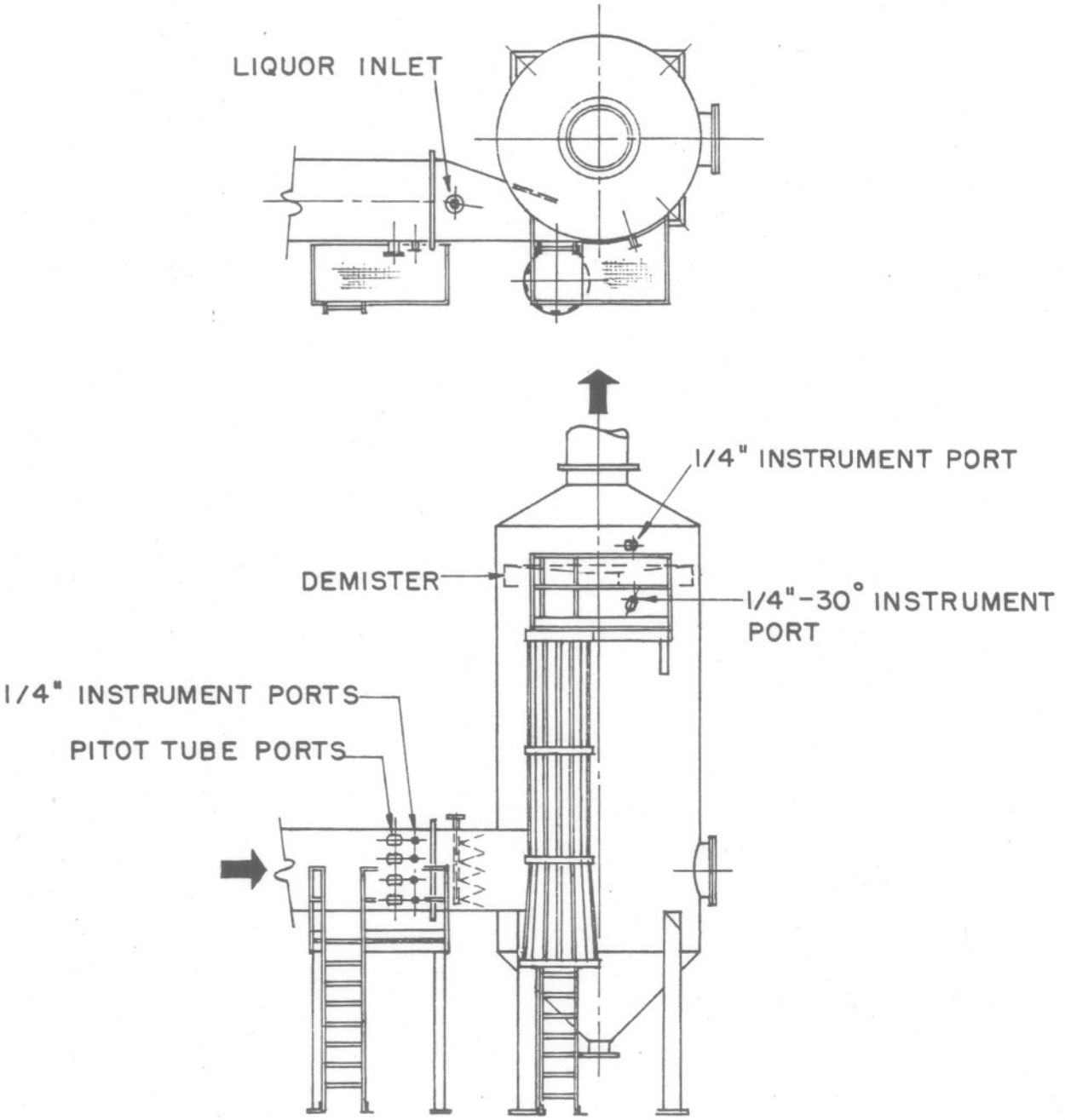

CENTRIFUGAL CYCLONIC SCRUBBER

Figure 3-16. Location of Ports on a Spray Tower Scrubber

There is another set of small ports located immediately upstream and downstream of the demister. These provide a means of identifying demister pluggage. Obviously, only one of these ports would be needed on a unit which does not have a demister.

3.4.5.2 Packed Bed, Moving Bed and Tray Tower Scrubbers - Preferred port locations for this large group of scrubbers is illustrated in Figure 3-17. Small instrumentation ports are provided between each bed or tray and before and after the demister. All of these are inclined 30° to facilitate drainage from the port (see Figure 3-3). Pitot tube ports are present in the ductwork before and after the scrubber. Due to the small scale of most systems, a single port is normally adequate and this minimizes the cost of the top platform. For large systems, two ports spaced 90° apart should be used.

3.4.5.3 Gas-Atomized Scrubbers - A typical venturi scrubber is shown in Figure 3-18. The small measurement ports are installed immediately upstream of the point of liquor injection, on the horizontal duct leading to the cyclonic chamber, and above the demister. In this case, the static pressure drop can be determined using the middle port and the port above the demister. The pressure drop across the throat can be estimated using the initial port and the middle port.

It is important that the middle port be in the middle or upper portion of the horizontal duct. This is an area very prone to port pluggage due to the turbulent motion of the liquor droplets coming from the venturi throat. There is also a layer of liquor flowing on the sloped bottom of this duct.

Pitot tube ports similar to those illustrated in Figure 3-4 should be installed in the ductwork upstream and downstream of the venturi scrubber vessel. These should be located as far from flow disturbances as possible. The outlet duct ports should be located before an induced draft fan. However, if this is not possible, the stack ports can be used.

Figure 3-19 illustrates the pitot tube ports which are appropriate for most gas-atomized scrubbers. There are two separate ports spaced 90° apart, each of which is 45° off the center line of the platform. This allows access to both ports with an economical platform.

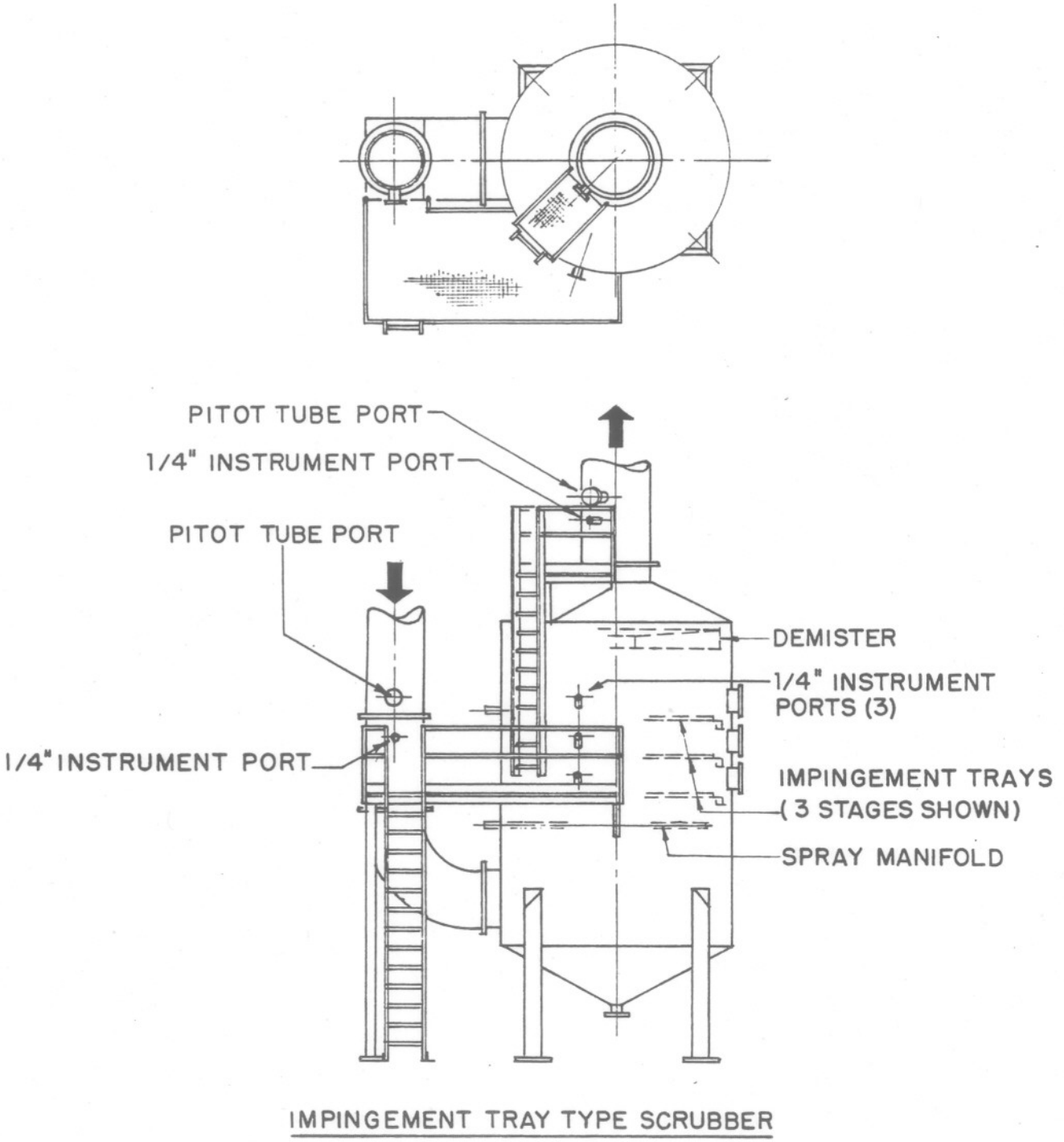

Figure 3-17. Location of Ports on Packed Bed, Moving Bed and Tray Type Scrubbers

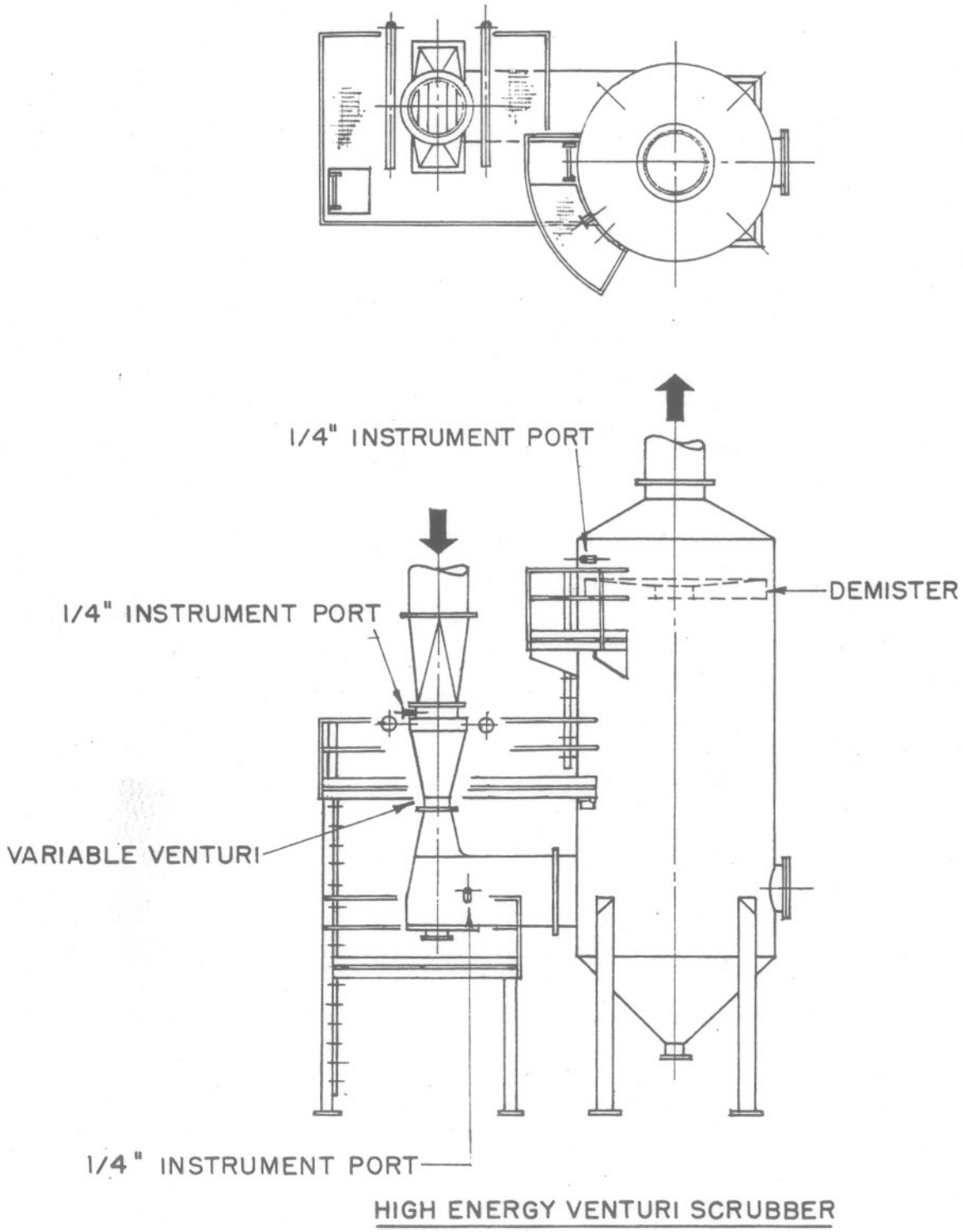

Figure 3-18. Location of Ports on Gas-Atomized Scrubbers

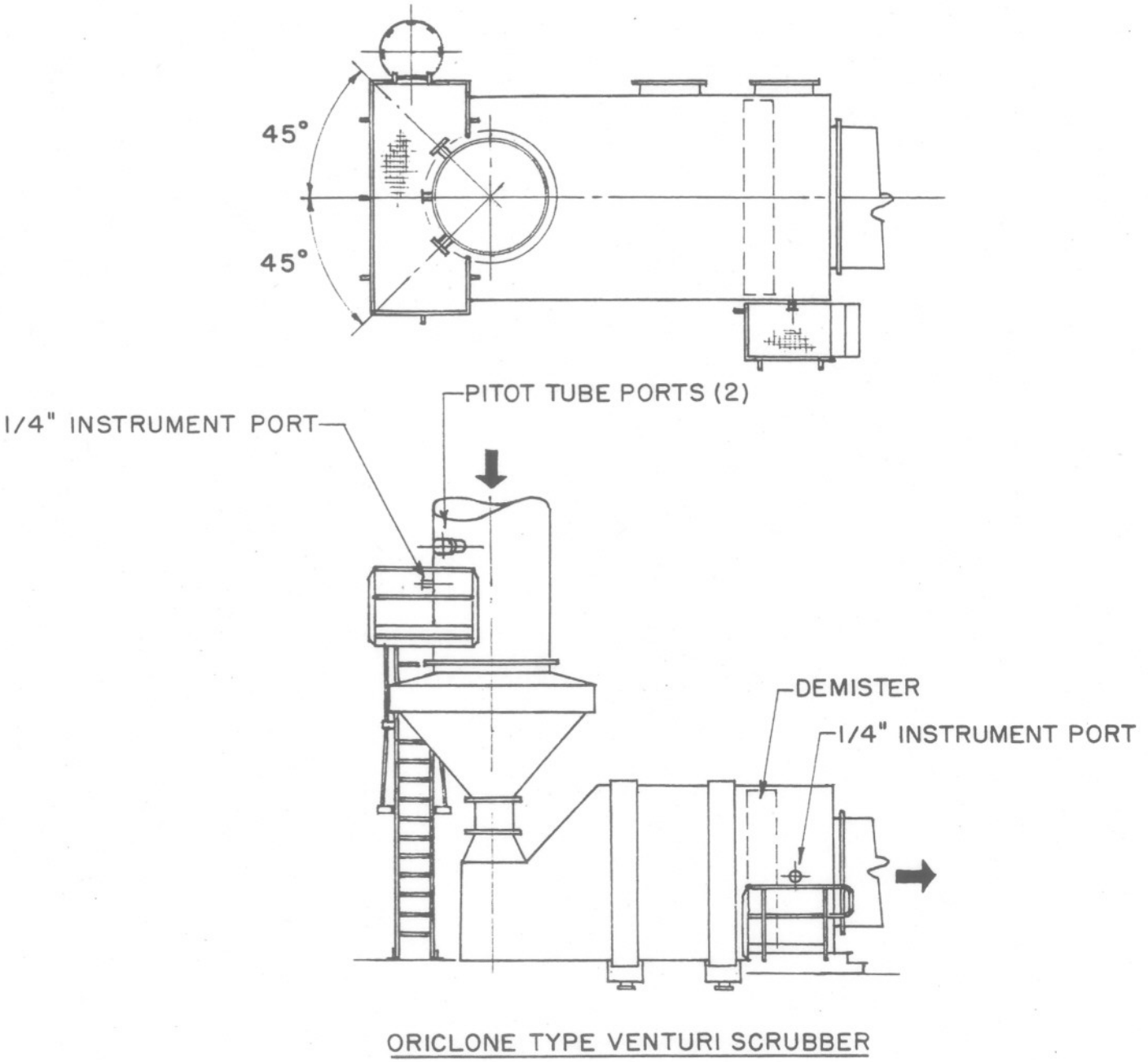

Figure 3-19. Location of Ports on Inlet Duct to Gas-Atomized Scrubber

REFERENCES

1. Richards, J. and R. Segall. Wet Scrubber Performance Evaluation. EPA Publication No. 340/1-83-022. September, 1983.

2. Richards, J. and R. Segall. Advanced Inspection Techniques Workshop, Student Manual (Draft). Report to the U.S. Environmental Protection Agency under Contract No. 68-01-6312. May, 1984.

3. Richards, J. Chapter 8, Baseline Inspection Techniques. In: Air Compliance Inspection Manual (Draft). Report to U.S. Environmental Protection Agency under Contract No. 68-02-3960. September, 1984.

EPA

United States
Environmental Protection Agency
401 M Street, S.W.; (EN-341W)
Washington, DC 20460

Offical Business
Penalty for Private Use
$300

EPA 340/1-92-015f