U.S. Environmental Protection Agency

AIR POLLUTION TRAINING INSTITUTE (APTI)

COURSE 450: SOURCE SAMPLING FOR POLLUTANTS

STUDENT GUIDE

United States Environmental Protection Agency
Office of Air and Radiation
Office of Air Quality Planning and Standards
Research Triangle Park, NC 27711

Contract No. EP-D-09-096.

September 2013

NOTICE

This is not an official policy and standards document. The opinions are those of the author and not necessarily those of the U.S. Environmental Protection Agency (EPA). Every attempt has been made to represent the present state of the art, as well as subject areas still under evaluation. Any mention of products or organizations does not constitute endorsement by the EPA.

AVAILABILITY

This document is issued by the Innovative Programs and Outreach Group, Outreach and Information Division, Office of Air Quality Planning and Standards (OAQPS). It was developed for use in training courses presented by the U.S. EPA's Air Pollution Training Institute (APTI) and others receiving contractual or grant support from the Institute. Other organizations are welcome to use this document.

This document is available, free of charge, to schools or governmental air pollution control agencies intending to conduct training courses. To obtain a copy of this document, submit a written request to APTI, EPA, Mail Code C304-05, Research Triangle Park, NC 27711. Others may obtain copies, for a fee, from the National Technical Information Service (NTIS), 5825 Port Royal Road, Springfield, VA 22161.

COURSE DESCRIPTION

This training is a four-day course dealing with the methods used to sample particulate matter from stationary emission sources. The course presents the principles and techniques associated with isokinetic source sampling procedures for particulate matter given in 40 CFR 60 Appendix A, of the U.S. Code of Federal Regulations. The course is designed for students having an engineering or science background and should prepare the student to perform and/or evaluate a particulate source test.

Lectures cover basic concepts associated with gas volumetric flow and isokinetic sampling as well as details of actual sampling procedures. Problem solving in the performance of EPA source test reference methods 1, 2, 3, 4, and 5 is emphasized. Laboratory exercises are designed to familiarize students with the proper use and calibration of source sampling equipment. Students perform a source test, make all calculations, and report. results. Major topics include:

- Basic Principles of Gas Behavior
- Description of Source Sampling Equipment
- Explanation of EPA Methods 1-5
- Source Sampling Calculations
- Principles of Isokinetic Sampling
- Gas Velocity and Flow Rate Calculations
- The Method 5 Test
- Special Topics

In the Air Pollution Training Institute curriculum, this is considered to be the introductory course in the source sampling course sequence. Students should have a college-level education in engineering or the sciences and should be capable of manipulating simple algebraic expressions and performing mathematical computations.

TABLE OF CONTENTS

Course Introduction **2**

Chapter 1 ..... **1**

1.0 Introduction to Source Testing for Particulate Matter **1-1**

1.1 Particulate Matter 1-2

1.2 $PM_{2.5}$ and PM_{10} National Ambient Air Quality and Particle Sampling Method 1-6

1.3 Emission Sources 1-7

1.4 Emission Standards 1-10

1.5 The EPA Source Testing Reference Methods 1-18

1.6 Summary 1-26

Bibliography 1-27

Chapter 2 ..... **2-1**

2.0 Properties of Gases **2-1**

2.1 Overview 2-1

2.2 Gas Stream Sampling 2-1

2.3 Summary 2-19

Bibliography 2-19

3.0 The Method 5 Sampling Train **3-1**

3.1 Overview 3-1

3.2 EPA Method 5 Description and Theory 3-1

3.3 Isokinetic Sampling 3-4

3.4 The Method 5 Sampling Train 3-12

3.5 Method 5 Stack Testing Equipment 3-16

3.6 Summary 3-27

Bibliography 3-27

Chapter 4 ..... **4-1**

4.0 The First Four Reference Methods **4-1**

4.1 Overview 4-1

4.2 Method 1: Sample and Velocity Traverses for Stationary Sources 4-3

4.3 Method 2: Determination of Stack Gas Velocity and Volumetric Flow Rate (Type S Pitot Tube) 4-12

4.4 Methods 2A through 2H 4-15
4.5 Method 3: Gas Analysis for the Determination of Dry Molecular Weight 4-20
4.6 Method 4: Determination of the Moisture Content in Stack Gases 4-23
4.7 Summary 4-26
Bibliography 4-26

Chapter 5 5-1
5.0 The Source Test 5-1
5.1 Overview 5-1
5.2 Phase I: Objectives and Protocols 5-2
5.3 Phase II: Equipment and Chemical Preparation 5-9
5.4 Phase III: The Source Test 5-17
5.5 Phase IV: Sample Cleanup, Analysis, Calculations, and Report Writing 5-24
5.6 Summary 5-43
Bibliography 5-43

Chapter 6 6-1
6.0 Report Writing and Emissions Calculations 6-1
6.1 Overview 6-1
6.2 The Stack Test Report 6-1
6.3 Emission Units and Calculations 6-8
6.4 Summary 6-17
Bibliography 6-18

Chapter 7 7-1
7.0 Topics in Source Test Quality Assurance 7-1
7.1 Overview 7-1
7.2 Error Analysis 7-1
7.3 The Role of the Agency Observer 7-5
7.4 Calibration 7-17
7.5 Summary 7-34
Bibliography 7-35

Chapter 8 8-1
8.0 Sampling Train Configurations and PM_{10} Sampling 8-1
8.1 Overview 8-1

8.2 Basic Sampling Train Configurations of 40 CFR Part 60 8-2
8.3 Summary 8-13
Bibliography 8-13

Chapter 9 9-1
9.0 Particle Sizing 9-1
9.1 Overview 9-1
9.2 Determining Particle Size and Mass 9-1
9.3 Summary 9-18
Bibliography 9-19

Chapter 10 10-1
10.0 Continuous Particulate Emissions Monitoring 10-1
10.1 Overview 10-1
10.2 Measurement Techniques 10-2
10.3 Summary 10-16
Bibliography 10-166

APPENDICES

APPENDIX A: EQUATION DERIVATIONS A-1
A.1 Derivation of the Equation for Molecular Weight of Stack Gas A-1
A.2 Stack Gas Analysis Using Orsat Analyzer A-3
A.3 Derivation of Concentric Equal Areas of a Circular Duct A-4
A.4 Derivation of the Equivalent Diameter Equation for a Duct of Any Shape A-8
A.5 Derivation of the Pitot Tube Equation A-9
A.6 Derivation of Isokinetic Rate Equation A-12
A.7 Derivation of the Isokinetic Variation Equations A-14
A.8 Derivation of the Concentration Correction Equations A-16

Appendix B: Units and Conversion Factors B-1
B.1 Units B-1
B.2 Conversion Factors B-2
Bibliography B-5

LIST OF FIGURES

Figure 1-1. Particle size ranges. 1-3
Figure 1-2. Micrograph of two 2.5-micrometer particles collected from ambient air. 1-4
Figure 1-3. Particle deposition in the respiratory system. 1-5
Figure 1-4. Coal-fired power plant. 1-8
Figure 1-5. Schematic of a municipal incinerator. 1-8
Figure 1-6. Schematic of the kraft pulping process. 1-9
Figure 2-1. The volume of a balloon is dependent upon the quantity of air blown into it. 2-4
Figure 2-2. Volume of a gas as a function of absolute temperature. 2-7
Figure 2-3. A mercury column supported by normal atmospheric pressure. 2-9
Figure 2-4. Variation of stack static pressure in a duct. 2-10
Figure 2-5. Determining the volumetric flow at a stack cross-section. 2-14
Figure 2-6. Fluid flow through a constricted tube. 2-16
Figure 2-7. Monitoring the pressure on a constricted flow tube. 2-16
Figure 2-8. The pilot tube (left) and the orifice meter (right). 2-17
Figure 3-1. Isokinetic sampling. 3-4
Figure 3-2. Particles in a gas stream. 3-5
Figure 3-3. Isokinetic sampling conditions. 3-6
Figure 3-4. Anisokinetic sampling conditions. 3-6
Figure 3-5. Nozzle misalignment. 3-7
Figure 3-6. The Federal Reference Method 5 sampling train. 3-12
Figure 3-7. Schematic of a Method 5 sampling train. 3-13
Figure 3-8. Variation of gas velocity in a rectangular duct and Method 1 traverse points. 3-14
Figure 3-9. Photograph of a Method 5 sampling train. 3-16
Figure 3-10A and B. Photographics of typical quartz(L) and stainless steel nozzle sets (R). 3-17
Figure 3-11. Illustration of nozzle attached to probe sheath. 3-17
Figure 3-12. Calipers being used to determine internal diameter of the sampling nozzle. 3-18
Figure 3-13. Preferred nozzle shape (assembled with a Type S pitot tube). 3-18
Figure 3-14. Nozzle alignment with the pitot tube. 3-19
Figure 3-15 A and B. Proper orientation of Method 5 Type S pitot tube and thermocouple with reference to nozzle(R). 3-20
Figure 3-16. The sample probe – pitot tube assembly. 3-20

Figure 3-17. Illustration of probe sheath/liner connected to the filter assembly in the heated case. 3-22
Figure 3-18. Typical Method 5 cold box and glassware. 3-22
Figure 3-19. Traditional Method 5 umbilical cord. 3-23
Figure 3-20. Typical Method 5 meter box assembly. 3-24
Figure 3-21. Schematic of the EPA Method 5 flexible sampling train. 3-26
Figure 3-22. COMP 5 sampling train and shell heated filter assembly. 3-26
Figure 4-1. A sampling site 8 duct diameters downstream and 2 duct diameters upstream from ductwork disturbances (bends). 4-3
Figure 4-2. A directional flow-sensing probe. 4-4
Figure 4-3. Minimum number of traverse points for a Method 5 particulate traverse. 4-5
Figure 4-4. Minimum number of traverse points for a gaseous sampling velocity traverse. 4-6
Figure 4-5. Example showing a rectangular duct cross-section for 12 traverse points divided into a matrix of 12 equal areas. 4-7
Figure 4-6. Equal areas and traverse points on a circular cross-section. 4-8
Figure 4-7. Areas of potential swirling and cyclonic flow in duct and stack. 4-10
Figure 4-8. Direction of pitch and yaw angle in stacks. 4-11
Figure 4-9. Recommended sampling arrangement for small ducts. 4-11
Figure 4-10. Components of pressure in a flowing gas stream. 4-12
Figure 4-11. Standard pitot tube. 4-14
Figure 4-12. Type S pitot tube. 4-14
Figure 4-13. Tip of the Type S pitot tube. 4-15
Figure 4-14. Measurement of the stack static pressure. 4-19
Figure 4-15. A typical Orsat analyzer for measuring % O_2, % CO_2, and % CO. 4-21
Figure 4-16. Grab sampling. 4-22
Figure 4-17. Integrated sampling. 4-22
Figure 5-1. Task in planning and conducting a source test (Adapted from Brenchley, et.al in "Industrial Source Sampling" Ann Arbor Science 1973). 5-2
Figure 5-2. Phase I: Establishing Test Objectives, Developing SOPs, Performing Pre-test Measurements and Finalizing Test Protocols. 5-3
Figure 5-3. Required clearance zones at stack for Federal Reference Method 5 sampling train. 5-6
Figure 5-4. Illustration of monomount monorail system to support Federal Reference Method 5 sampling train. 5-6
Figure 5-5. Properly constructed monorail support system and required clearance zones for traversing stack during stack test. 5-6
Figure 5-6. Phase II: Equipment and Chemical Preparation. 5-10

Figure 5-7. Method 5 sampling train. 5-11
Figure 5-8. Installation of the probe sheath, 5/8 union and probe nozzle connectors. 5-15
Figure 5-9. Filter into filter assembly. 5-17
Figure 5-10. Phase III, The Source Test. Pre-test Meeting and Pre-test Evaluation Preparation for Source Test. 5-18
Figure 5-11. Phase III, The Test: Operation of the Federal Reference Method 5 Sampling Train. 5-20
Figure 5-12. Typical commercially available seven (7) piece stainless steel nozzle set. 5-21
Figure 5-13. Assembly of filter, impingers and u-tubes in the hot and cold boxes of the Federal Reference Method 5 sampling train. 5-22
Figure 5-14. Phase IV, Sample Cleanup, Analysis, Calculations, and Report Writing. 5-25
Figure 5-15. Probe liner/nozzle rinse with acetone. 5-28
Figure 5-16. Internal rinse with acetone of probe nozzle. 5-28
Figure 5-17. Brushing of probe nozzle with acetone. 5-28
Figure 5-18. Recovery of silica gel into pre-weighted bottle. 5-29
Figure 5-19. Measurement of impinger water using graduated cylinder. 5-29
Figure 7-1. Observer's checklist. 7-7
Figure 7-2. Observer's checklist (continued). 7-8
Figure 7-3. Observer's checklist (continued). 7-9
Figure 7-4. Sampling checklist. 7-11
Figure 7-5. Sample recovery checklist. 7-14
Figure 7-6. Leak-check for the Method 5 meter console. 7-19
Figure 7-7. Meter console calibration assembly. 7-20
Figure 7-8. Adaptation of critical orifice to Method 5 system. 7-21
Figure 7-9. Critical orifice apparatus setup. 7-22
Figure 7-10. Type S pitot tube leg alignment. 7-24
Figure 7-11. Type S pitot tube orifice alignment. 7-25
Figure 7-12. Standard pitot static tube. 7-26
Figure 7-13. Pitot tube position in duct. 7-27
Figure 7-14. Configurations for minimum interference. 7-28
Figure 7-15. Dry gas meter calibration configuration. 7-30
Figure 7-16. Form for source sampling nomograph calibration. 7-33
Figure 8-1. Method 5 sampling train configuration. 8-4
Figure 8-2. Schematic of an in-stack filter system. 8-5
Figure 8-3. Schematic diagram of Method 8. 8-6

Figure 8-4. Schematic diagram of Method 13A (SPADNS Zirconium Lake Method). 8-7
Figure 8-5. A combined system. 8-8
Figure 8-6. The exhaust gas recycle (EGR) method for PM_{10}. 8-9
Figure 8-7. In-stack PM_{10} and $PM_{2.5}$ sampling train. 8-10
Figure 8-8. Schematic of Condensable Particulate Sampling Train. 8-11
Figure 8-9. Dilution sampling train schematic. 8-12
Figure 9-1. Size comparison: raindrop vs. 100µm particle. 9-3
Figure 9-2. Aerodynamic diameter. 9-4
Figure 9-3. Mark III in-stack cascade mpactor. 9-5
Figure 9-4. Photomicrograph of flyash particles on an MCE filter 9-7
Figure 9-5. Ambient particulate matter size distributions. 9-7
Figure 9-6. Operation of an inertial impactor. 9-8
Figure 9-7. Two types of commercial cascade impactors. 9-9
Figure 9-8. In-stack cyclone. 9-10
Figure 9-9. EPA Method 201A sampling train. 9-11
Figure 9-10. Principle of electrical mobility analyzers. 9-12
Figure 9-11. Typical log normal frequency distribution curves for flue gas particles. 9-13
Figure 9-12. Particle histogram. 9-14
Figure 9-13. Cumulative frequency distribution curve in chapter. 9-16
Figure 9-14. Particle size distribution log-probability plot form data in Table 9-6. 9-17
Figure 9-15. Histogram of a bi-modal particle size distribution. 9-18
Figure 10-1. A double-pass transmissometer. 10-3
Figure 10-2. Angular dependence of the intensity of light scattered by a spherical particle of index of refraction 1.20. The intensity is arbitrarily normalized in each case. 10-4
Figure 10-3. A back-scattering continuous mass emission monitor. 10-5
Figure 10-4. A side-scattering continuous mass emission monitor. 10-6
Figure 10-5. A typical beta gauge paper tape monitor. 10-7
Figure 10-6. Manual reference: extinction correlation for a transmissometer continuous particulate mass monitoring system. 10-14
Figure 10-7. Confidence intervals and the concentration-extinction plot. 10-15
Figure A-1. Traverse points for a circular duct with four equal areas. 10-4
Figure A-2. Radius r'_j for a circular duct. 10-7
Figure A-3. Fluid flow around a standard pitot tube. A-9
Figure A-4. Concentrations of $C0_2$ and 0_2 in stack by amount of excess air. A-18

LIST OF TABLES

Table 1-1. New Source Performance Standards (NSPS) 1-10

(40 CFR 60 subparts) as of September 25, 2012. 1-10

Table 1-2. Examples of New Source Performance Standards (NSPS) for particulate matter emissions from selected sources (40 CFR 60 subparts) as of September 25, 2012. 1-14

Table 1-3. List of U.S. EPA reference methods (40 CFR Part 60, Appendix A). 1-21

Table 2-1. Molecular weights of common stack gas constituent. 2-4

Table 3-1. Promulgated versions of Method 5 listed in 40 CFR Part 60, Appendix A. 3-3

Table 3-5. Recommended maximum temperature for various probe liners and fitting materials. 3-21

Table 4-1. Location of traverse points in circular stacks (percent of stack diameter from inside wall to traverse point). 4-8

Table 5-1. Preliminary measurements taken during pre-test survey to establish isokinetic sampling utilizing Federal Reference Method 5 sampling train. 5-7

Table 5-2. Sampling system equipment calibration and frequency. 5-12

Table 5-3. Maximum stack gas temperatures for probe liner materials. 5-14

Table 5-4. Probe sheath temperature ranges. 5-15

Table 6-1. F factors. 6-11

Table 6-2. F factors for various fuels[1]. 6-13

Table 6-3. Test methods and procedures; 40 CFR Part 60.46. 6-14

Table 7-1. Observer's report format. 7-16

Table 7-2. Quality Assurance Handbook Volume III,. Table of Procedures and Data Sheets. 7-17

Table 8-1. Federal Reference Methods that require isokinetic sampling. 8-2

Table 9-1. Spherical particle diameter, volume, and area. 9-2

Table 9-2. Aerodynamic diameters of differently shaped particles. 9-5

Table 9-3. Aerodynamic diameters of particles with different densities. 9-6

Table 9-4. EPA terminology for particle sizes. 9-6

Table 9-5. Particle size and frequency data used for constructing histogram (Figure 9-12). 9-14

Table 9-6. Particle size and concentration data for Figure 9-14. 9-17

Table 10-1. Automated measurement methods for particulate matter. 10-2

Table 10-2. ISO instrument performance specifications. 10-8

Table 10-3. PS-11 Performance Specifications. 10-9

Table 10-5. Correlation specifications for continuous mass monitoring. 10-12

Table B-1. Conversion factors. B-2

Table B-2. Mass, pressure. B-2
Table B-3. Capacity, energy, force, heat. B-4

APPENDICES

APPENDIX A

A.1 Derivation of the Equation for Molecular Weight of Stack Gas A-1
Introduction A-1
Calculation of Apparent Molecular Weight of Gas Mixture A-1
The ideal gas laws A-1
A.2 Stack Gas Analysis Using Orsat Analyzer A-3
A.3. Derivation of Concentric Equal Areas of a Circular Duct A-4
A.4. Derivation of the Equivalent Diameter Equation for a Duct of Any Shape A-8
A.5. Derivation of the Pitot Tube Equation A-9
A.6. Derivation of Isokinetic Rate Equation A-12
Introduction A-12
Derivation A-13
A.8. Derivation of the Isokinetic Variation Equations A-14
A.9. Derivation of the Concentration Correction Equations A-16
Concentration Corrected to Standard Conditions A-16
Excess Air A-17
Concentration Corrected to 50% Excess Air A-20
Correcting Concentration to 12% CO_2 A-22
Correcting Concentration to 6% O_2 A-22

APPENDIX B

B.1. Units B-1
Constants B-1
EPA Standard Conditions B-1
Conversion Expressions B-1
Temperature B-1
Gas Concentration Units B-1
B.2. Conversion Factors B-2
Bibliography B-5

Publications of the Environmental Protection Agency, Research Triangle Park, NC.....B-**6**

SYMBOLS

An	-	sampling nozzle cross-sectional area
A_5	-	stack cross-sectional area
a	-	mean particle projected area
Bwm	-	percent moisture present in gas at meter
Bws	-	percent moisture present in stack gas
CP	-	pitot tube calibration coefficient
Cp(std)	-	standard pitot-static tube calibration coefficient
C_5	-	particulate concentration in stack gas mass/volume
cws	-	particulate concentration on a wet basis mass/wet volume
c512	-	particulate concentration corrected at 12% CO_2
c550	-	particulate concentration corrected to 50% excess air
DE	-	equivalent diameter
DH	-	hydraulic diameter
Pn	-	source sampling nozzle diameter
E	-	emission rate - mass/heat Btu input
£	-	electric field strength
E	-	electric mobility
e	-	base of natural logarithms (IntO= 2.302585)
%EA	-	percent excess air
Fe	-	F sub c factor using C5 and CO_2 on a wet or dry basis
Fd	-	F sub d factor using C5 and O_2 on a dry basis
Fw	-	F sub w factor using Cws and O_2 on a wet basis
F_o	-	F sub o factor used for checking Orsat data
AH@	-	pressure drop across orifice meter for 0.75 cfm flow rate at standard conditions
AH	-	pressure drop across orifice meter the /h traverse point
K	-	factor used in the isokinetic rate equation (a function of many variables)

KP - pitot tube equation dimensional constant metric units

m ((g/g- mole) (mmHg))112
34.97 sec (°K) (mm H_20)

English units

ft ((lb/lb- mole) (in. Hg))112
85.49 sec (°R) (in. H_20)

m - mass

Md - dry gas molecular weight

Ms - wet stack gas molecular weight

n - number of moles

Patm - atmospheric pressure

Pb - barometric pressure (Pb = Patm)

Pm - absolute pressure at the meter

pmr - pollutant mass rate

p, - stack static pressure (gauge pressure)

Ps - absolute pressure in the stack

P_{std} - standard absolute pressure

metric units= 760 mm Hg
English units= 29.92 in. Hg

P - gas velocity pressure

P_{std} - standard velocity pressure read by the standard pitot tube

P_{test} - gas velocity pressure read by the Type S pitot tube

p - gas density

Os - stack gas volumetric flow rate corrected to standard conditions

R - gas law constant
temperature (degrees Fahrenheit or degrees Celsius)

Tm - absolute temperature at the meter

metric units = oc + 273 = oK
English units = oF+ 460 = oR

T_5 - absolute temperature of stack gas

T_{std} - standard absolute temperature
metric units= 20°C + 273 = 293°K

English units := 69°F + 460 = 528°R

V_m	-	volume metered at actual conditions
$V_{m(std)}$	-	volume metered corrected to standard conditions
v.p.	-	vapor water pressure
v_d	-	drift velocity
v_n	-	nozzle velocity
v_s	-	stack gas velocity
W	-	width of the duct cross-section at the sampling site
Q	-	time in minutes

SUBSCRIPTS

atm	-	atmospheric
avg	-	average
b	-	barometric
corr	-	corrected
d	-	dry gas basis
f	-	final
g	-	gauge (initial)
m	-	at meter
n	-	at nozzle
p	-	of pitot tube
s	-	at stack
scf	-	standard cubic feet
spu	-	spirometer
std	-	standard conditions
T	-	total
th	-	theoretical
w	-	wet basis

COURSE INTRODUCTION

WELCOME

Welcome to Environmental Protection Agency Training Course 450: Source Sampling for Pollutants.

Purpose

The purpose of this course is to provide general instruction about source sampling for pollutants, as outlined by the Environmental Protection Agency (EPA).

Course Topics Covered

This course includes ten chapters which cover the following topics:

- Chapter 1: Introduction to Source Testing for Particulate Matter
- Chapter 2: The Properties of Gases
- Chapter 3: Method 5 Sampling Train
- Chapter 4: The First Four Reference Methods
- Chapter 5: The Source Test
- Chapter 6: Report Writing and Emissions Calculations
- Chapter 7: Topics in Source Test Quality Assurance
- Chapter 8: Sampling Train Configurations and PM_{10} Sampling
- Chapter 9: Particle Sizing
- Chapter 10: Continuous Particulate Emissions Monitoring
- Appendix A: Equation Derivations
- Appendix B: Units and Conversion Factors

COURSE COMPLETION REQUIREMENTS

Upon conclusion of this each chapter, participants will complete a Post-Test that will determine their grade for the course.

CHAPTER 1

1.0 INTRODUCTION TO SOURCE TESTING FOR PARTICULATE MATTER

PURPOSE

The purpose of this chapter is to introduce you to the reasons why stacks and ducts of emission sources are sampled for particulate and gaseous pollutants, and to review the basic categories of sampling methods.

Particles are emitted into the atmosphere by both natural processes and human activities. Although we can do little about natural phenomena, the release of particles into the atmosphere from human activities can be minimized by adding controls to emission sources, such as incinerators and power plants, or by changing the way we do things. But why minimize such emissions in the first place? Put simply, they affect our health and welfare. High concentrations of particles in the atmosphere can cause respiratory illness, obscure visibility, cause material and agricultural damage, and affect our psychological well-being.

If we attempt to reduce particulate emissions by controlling or changing our emission sources, we should have some way of determining whether we have been successful. This is where source testing comes in. Source testing methods tell us how we are doing in controlling emissions.

LEARNING OBJECTIVES

At the conclusion of this training students will be able to:

- Identify the characteristics of particulate matter and their effects.
- Distinguish between the standards that apply to $PM_{2.5}$ and PM_{10}.
- Identify the sources of particulate matter emissions.
- Identify the standards that apply to particulate matter emissions.
- Distinguish between test methodology categories A, B, C, and D.
- Understand the EPA's test method numbering system.
- Differentiate between the EPA division offices responsible for source testing methods.

1.1 PARTICULATE MATTER

INTRODUCTION

Particulate matter is the finely divided solid or liquid material found in a flue gas (not including uncombined water). This material is, of course, composed of particles. The terminology associated with particles in air is often confusing, primarily because the problems of "smokes," "mists," and "vapors" have been of concern over the long period of human development, especially during the more recent industrial ages. Typical terms are *dust*, *fume*, *smoke*, *mist*, and *spray*. The terms *dispersion aerosol* and *condensation aerosol* are also used, primarily in discussions relating to particles entrained in ambient air.

Particles can be described by three basic features:

1. how they are formed,
2. what they are made of, and
3. their size.

PARTICLE FORMATION AND COMPOSITION

Particles can be formed by mechanical action, chemical reaction, condensation, or atomization. Solid particles can be entrained by process gases when they are handled or transported, or they can be generated directly by physical processes such as grinding, crushing, or woodworking. Solid particles can also be generated in chemical processes, where high temperature processes may lead to the formation of volatile metal particles, particles of metal oxides, or other materials. Incomplete combustion leads to the emission of solid particles of carbon or particles from the unburnable minerals in the fuel.

Liquid particles can be generated by condensation processes or through chemical reaction. The blue haze seen from some process stacks is due to the presence of condensed organic materials in the exhaust gases. Acid gases, such as sulfur trioxide (SO_3), can condense and form droplets of sulfuric acid (H_2SO_4) "aerosol." The formation of liquid particles is generally temperature-dependent. In many cases, they may not be formed until the flue gas is emitted from the stack. Water vapor can condense and form droplets, which may effectively scatter light to exhibit the "steam plume" commonly observed from power plants on cold winter days. However, in most cases, water is not considered a pollutant and is excluded from regulatory definitions of particulate matter.

But if particle formation is dependent on temperature and we don't count water droplets, what is *particulate matter*? The U.S. Environmental Protection Agency responds as follows: *Particulate matter* is any finely divided solid or liquid material, other than uncombined water, as measured by the reference methods (EPA, 1992).

In other words, by specifying how the particles are to be collected, the reference methods define what particulate matter is. The reference methods define the temperature at which the particles are to be collected, and water is collected and measured separately. This may in fact be a regulatory expedience, but the definition has worked well in the regulatory process of measuring and controlling flue gas emissions of particulate matter.

PARTICLE SIZE

In any sample of particles obtained from a flue gas, the particles will have different sizes and shapes. Particles formed by condensation or chemical processes are generally spherical. Particles formed in grinding or crushing operations are usually irregular in shape. The size of a particle is characterized by its diameter. For irregular particles, the *aerodynamic diameter* is used (see Chapter 9).

Particle diameters can typically range from a few hundredths of a micrometer (10^{-6} m or µm) to a hundred micrometers. In sources where particulate emissions are controlled by baghouses or electrostatic precipitators, particle sizes typically range from 0.1 to 1 µm. Figure 1-1 shows some of the size ranges of particles occurring from natural and manmade processes.

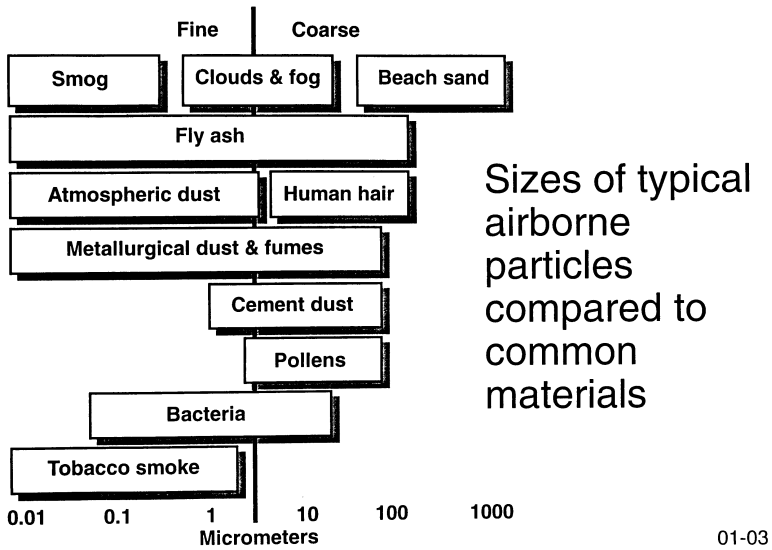

Figure 1-1. Particle size ranges.

The size of a particle will influence its behavior. For example, the "large" particles greater than 10 µm are prone to settling, or falling out of the gas stream. These particles are relatively easy to collect and remove. Smaller particles, less than 1 µm in diameter, are more difficult to collect. They can slip through filter pores or diffuse away from water droplets or other collection media.

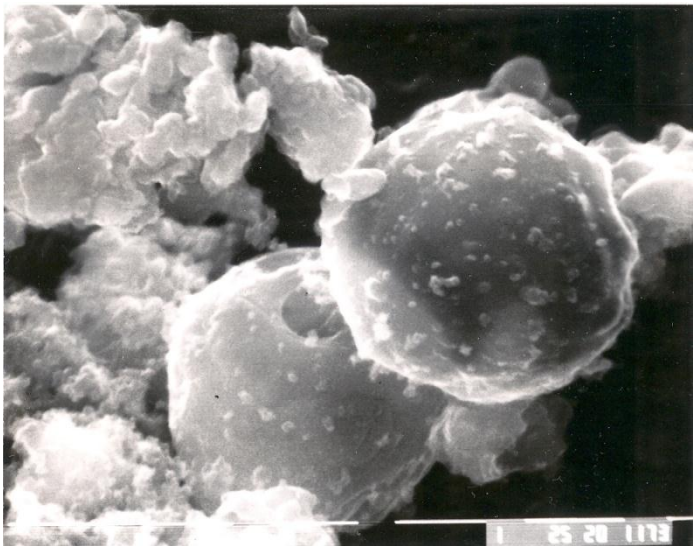

Figure 1-2. Micrograph of two 2.5-micrometer particles collected from ambient air.

(Electron Microscopy and Elemental Analysis of Fractionated Atmospheric Particles for Source Identification, William J. Franek, Ph.D. Thesis, University of Illinois-Chicago, Chicago, IL, 1992.)

HEALTH EFFECTS

Particle size also has great implications for human health. The deposition and removal mechanisms for particles depends on the size of the particles. Particles greater than 10 µm in diameter tend to collect in the upper part of the respiratory system, where they are filtered by nasal hair. The warm, humid conditions of the nasal passages act to remove the particles in the mucous layer lining the nasal cavity and trachea. Particles collect moisture as they move through the upper respiratory region. The resulting larger particles are removed by sneezing and coughing. In addition, fine, hair-like cilia, which line the walls of the respiratory system, continually move the mucous, where it is removed by swallowing.

Particles in the range of 1 to 10 µm in diameter tend to collect in the middle part of the respiratory system, the tracheobronchial region. Particles in the size range of 1 µm tend to deposit at locations where the bronchi of the lungs begin to branch off into the smaller bronchioles. Here, the particles impact the walls of the bronchi because they can't make the turn into the bronchioles. The smaller, submicron size particles (< 1 µm) can make the turn and penetrate down into the air sacs, or alveoli, where oxygen is transferred to the blood.

Particles with diameters of 0.5 µm in diameter or less float into the air sacs and float out within the next breath or two. Particles with diameters from 0.5 to 10 µm are captured by phagocytes and eliminated through the circulatory system.

Figure 1-3 shows the fraction of particles deposited in the three areas of the respiratory system.

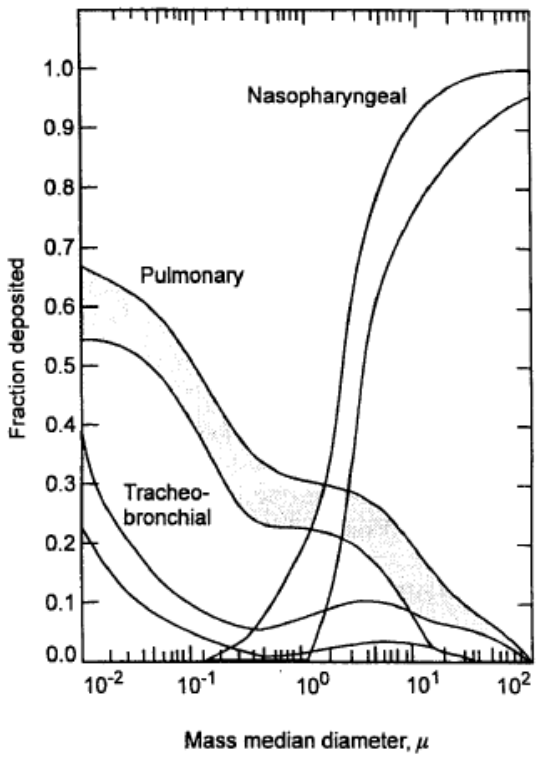

Figure 1-3. Particle deposition in the respiratory system.

Note that particles larger than 10 µm in diameter are deposited in the upper part of the respiratory system, where they are easily removed by physiological processes. The action of cilia and respiration act to remove smaller size particles in the bronchi and alveoli. Although the respiratory system can clean itself, continuous exposure to high levels of particulate matter can overwhelm the cleaning mechanisms and may cause the cilia to stop beating or fibrous tissue to develop in the alveoli. This, of course, leads to debilitating lung diseases.

Also, if soluble liquid particles or solid particles are deposited in the respiratory system, they can be readily absorbed into the tissues. Acid and radioactive materials (such as the radon "daughters" found in buildings with radon accumulation problems) obviously can cause irritation or more serious damage.

1.2 $PM_{2.5}$ AND PM_{10} NATIONAL AMBIENT AIR QUALITY AND PARTICLE SAMPLING METHOD

AIR QUALITY STANDARDS

Recognizing the relationship between particle size and deposition within the respiratory system, U.S. EPA reviews the National Ambient Air Quality (NAAQS) primary and secondary standards for particulate matter every five years. Revisions are promulgated if necessary to protect public health and welfare. The EPA first issued standards for particulate matter in 1971 and revised the standards in 1987, 1997, and 2006.

In 1987, the U.S. EPA replaced total suspended particulate (TSP) with *inhalable coarse particles* (PM_{10}) to target inhalable particles equal to or smaller than 10 micrometers, about one quarter the size of a single grain of table salt. The 24-hour PM_{10} standard was set at 150 microgram per meter cubed (µg/m3), and the annual PM_{10} standard was set at 50 µg/m3.

In 1997, the U.S. EPA added standards for *fine particles* ($PM_{2.5}$) to target particles equal to or smaller than 2.5 micrometers. These fine particles are associated with serious health effects. The $PM_{2.5}$ standards were set at 15 µg/m3 (annual mean) and 65 µg/m3 (24-hour average).

The 2006 standards tighten the 24-hour fine particle standard from 65 to 35 µg/m^3, and retained the current annual fine particle standard at 15 µg/m^3 and the existing 24-hour PM_{10} standard of 150 µg/m^3. Due to a lack of evidence linking health problems to long-term exposure to coarse particle pollution, the EPA has revoked the annual PM_{10} standard.

On June 14, 2012, the EPA proposed to reduce the annual fine particle standard from 15 µg/m^3 to 12-13 µg/m^3. The EPA did not propose any changes to the 24-hour standard from 2006. A final standard is expected in December 2012.

The NAAQS are enforced by designating areas of attainment and non-attainment with the standards. The designations are generally based on ambient air monitoring data collected by state and tribal regulatory agencies. After sufficient data is collected, states and tribes propose areas of attainment and non-attainment to the EPA. The EPA reviews the designations, makes necessary modifications, and promulgates the non-attainment areas in the Federal Register. States and tribes have three years to revise their State Implementation Plans (SIPs) or Tribal Implementation Plans (TIPs) to include controls that will bring the non-attainment areas into attainment. If states or tribes decline or fail to develop a SIP or TIP the Federal government will develop a Federal Implementation Plan (FIP).

For the 2006 NAAQS revisions, the EPA designated non-attainment areas on December 14, 2009. As a result, SIP or TIP revisions must be submitted to the EPA by December 14, 2012. Dates of attainment will vary depending on the severity of the non-attainment area. In general, states and tribes must attain the standard within five years of designation (December 14, 2014 for 2006 standards). However, the EPA may approve extended attainment dates of an additional one to five years for areas with more serious problems.

The revision of the standards from TSP to PM_{10}, and PM_{10} to $PM_{2.5}$ has significantly affected source emission measurement methods. In Methods 5 and 17, particles of all sizes are caught on a particulate filter. Method 17 is used instead of Method 5 when PM concentrations are known

to be independent of temperature over the normal range of temperatures characteristic of emissions from a specified source category.

PARTICLE SAMPLING METHODS

Two additional methods have been subsequently developed to measure filterable particulate matter emissions equal to or less than a nominal aerodynamic diameter of 10 µm. These methods are Method 201, the Exhaust Gas Recycle (EGR) procedure, and Method 201A, the Constant Sampling Rate (CSR) procedure. Method 201A can also be used to measure filterable particulate matter emissions equal to or less than a nominal aerodynamic diameter of 2.5 micrometers.

Method 202 can be used for sources that have condensable particulate matter emissions. If the gas filtration temperature exceeds 30°C (85°F) and both filterable and condensable components of total primary PM emitted to the atmosphere must be quantified, the procedures of Method 201A and 202 must be combined. These and other recommended methods can be found in 40 CFR Appendix M to Part 51—Recommended Test Methods for State Implementation Plans.

1.3 EMISSION SOURCES

SOURCE SAMPLING

Source sampling is the set of procedures used to obtain samples of flue gases from stationary sources. These flue gases may contain products of combustion such as carbon dioxide and water; pollutant gases such as sulfur dioxide, nitric oxides, and carbon monoxide; organic compounds; air toxics; and particulate matter. Emissions depend upon the type of emission source. Therefore, a source tester must choose the proper sampling techniques to obtain representative samples of gases and particulate matter.

TYPICAL EMISSION SOURCES

Emission sources commonly sampled are coal- and oil-fired power plants, municipal and hazardous waste incinerators, paper pulp mills, asphalt batch plants, cement plants, and other process industry plants.

Particles are emitted by most combustion sources. For example, in the non-nuclear electric utilities, steam and electric power are produced by burning fossil fuels such as natural gas, oil, and coal. Materials in the fuel that don't burn, such as silica, trace metals or unburned carbon (soot), can be emitted into the atmosphere if not collected by some air pollution control device. Because coal has a higher ash content than oil or natural gas, coal-fired plants have the potential to emit relatively higher amounts of particulate matter. Particulate emissions from natural gas-fired combustion sources are generally negligible. But even within a given source category, such as a coal-fired power plant (Figure 1-4), other variables will affect the level of particulate emissions. For example, particulate emissions can be higher from pulverized coal boilers than from cyclone-fired or spreader stoker-fired boilers. For oil-fired plants as well as coal-fired plants, the poorer the grade of fuel, the higher the particulate emissions. Particulate emissions from the #5 and #6 fuel oils will be higher than those from the lighter distillates (e.g., #2).

Figure 1-4. Coal-fired power plant.

Municipal, medical, and hazardous waste incinerators burn a wide variety of fuels (Figure 1-5). Particulate emissions here are very dependent upon the incinerator design and on how the plant is operated. In this regard, the combustion airflow rate is very important. If there is too much air, the temperature and residence time will decrease, resulting in poor combustion. In addition, unburned materials can be swept up into the exhaust gas stream. If there is too little air, combustion will be poor and unburned particles will also be incorporated into the exhaust gas. As the feed streams for these facilities are highly heterogeneous and can contain inorganic and organic toxics, they are highly regulated, with emission standards being frequently more stringent than for other sources.

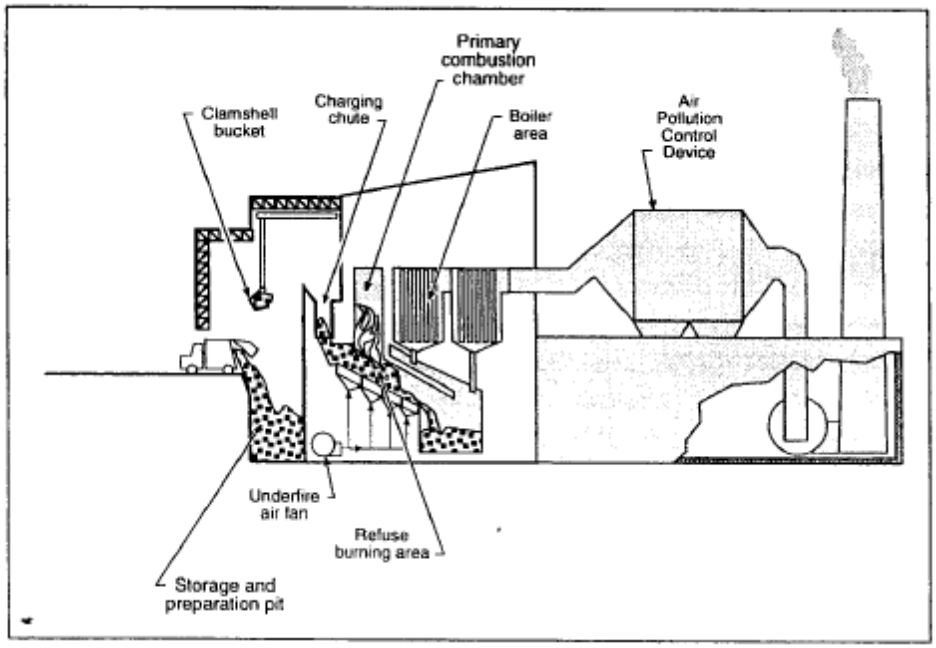

Figure 1-5. Schematic of a municipal incinerator.

In the process industries, particulate emissions can occur from a number of points in the plant operations. In contrast to sampling from a single stack or duct, sampling may be required at different facilities within the source. For example, in a cement plant, particulate emissions are sampled from the kiln exhaust and clinker cooler. In kraft pulp mills (Figure 1-6), particulate emissions are sampled from the kraft recovery furnace, smelt dissolving tank, and lime kiln.

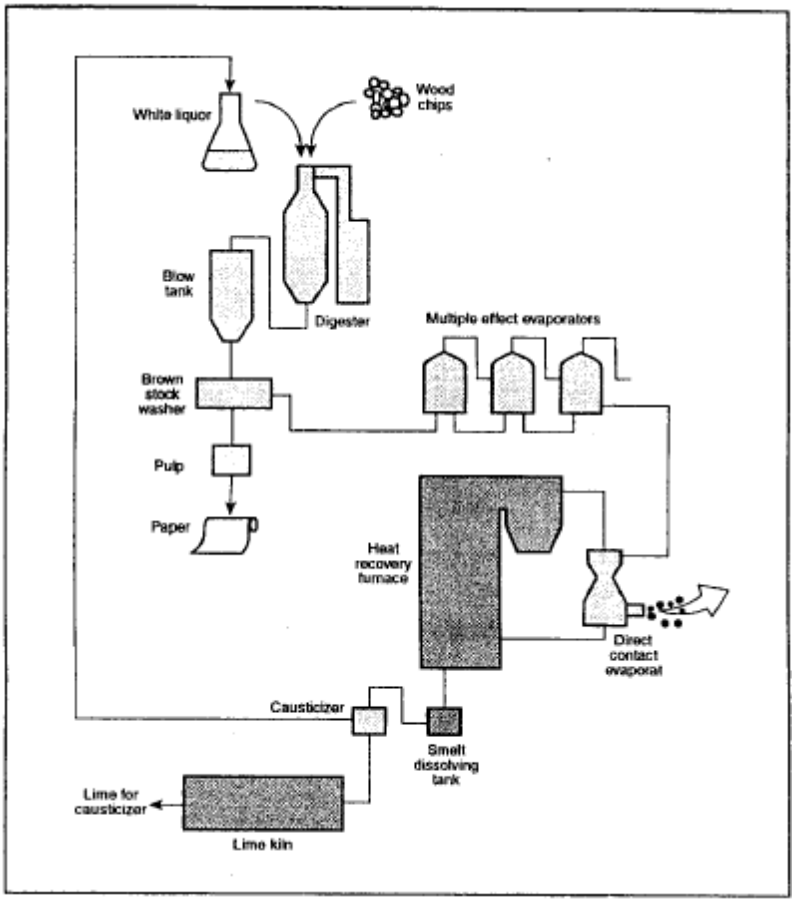

Figure 1-6. Schematic of the kraft pulping process.

Of course, industries are required to control the emission of particles into the atmosphere; otherwise the ambient air standards could not be met. Various devices are used to control particulate emissions, including electrostatic precipitators, baghouses, and wet scrubbers. These devices may work better in some applications than in others, and one of the tasks of source testing is to see how well the devices work. By testing before and after the control equipment, the source tester can determine its removal efficiency for particulate matter. This number (which can be better than 99%) can then be used to verify the guarantees of the control equipment manufacturer or to meet efficiencies mandated by the regulatory agency. Removal efficiency will also depend on particulate size. While a control device might work well for coarse particles it may not work as well for fine particles. Overall particulate removal efficiency can be determine using Method 5 or 17 while removal efficiency of fine particles can be determined using Methods 201, 201A, and 202.

1.4 EMISSION STANDARDS

STANDARDS FOR STATIONARY SOURCES

Emission standards for stationary sources are established by both the U.S. EPA and the states. Both the U.S. EPA and states promulgate engineering and health-based standards for new and existing sources. For example, the EPA promulgates National Emission Standards for Hazardous Air Pollutants (NESHAPs) which initially include technology based standards. Eight years after promulgation the EPA is required to review if significant residual risk exists and impose additional standards if necessary to protect public health. States regulate new sources through their New Source Review programs which include imposing Best Available Control Technologies to major sources and in some states minor sources. States will also implement Reasonably Available Control Technologies for existing sources in non-attainment areas.

Existing sources are those constructed before the U.S. EPA proposed standards for a new source category. The EPA standards are known as the *New Source Performance Standards*, or NSPS, and are found in Title 40, Part 60 of the Code of Federal Regulations (CFR). Title 40 addresses EPA environmental regulations and Part 60 includes the requirements for new stationary sources (referred to as 40 CFR Part 60). Part 60 is further divided into subparts, and each stationary source category is assigned a subpart. These are listed in Table 1-1.

Table 1-1. New Source Performance Standards (NSPS) (40 CFR 60 subparts) as of September 25, 2012.

Subpart Letter	Source Category
Cb	Emission Guidelines for Large Municipal Waste Combustors (built before September 20, 1994)
Cc	Emission Guidelines for Municipal Solid Waste Landfills
Cd	Emission Guidelines for Sulfuric Acid Production Units
Ce	Emission Guidelines for Hospital/Medical/Infectious Waste Incinerators
D	Fossil-Fuel Fired Steam Generators (built after August 17, 1971)
Da	Electric Utility Steam Generating Units (built after September 18,
Db	Industrial-Commercial-Institutional Steam Generating Units
Dc	Small Industrial-Commercial-Institutional Steam Generating Units
E	Incinerators
Ea	Municipal Waste Combustors (built after December 20, 1989 and on or before Sept 20, 1994, or modified/reconstructed after December 20, 1989 and on or before June 19, 1996)
Eb	Large Municipal Waste Combustors (built after September 20, 1994, or modified/reconstructed after June 19, 1996)
Ec	Hospital/Medical/Infectious Waste Incinerators (built after June 20, 1996)

Table 1-1. New Source Performance Standards (NSPS) (40 CFR 60 subparts) as of September 25, 2012.	
F	Portland Cement Plants
G	Nitric Acid Plants
H	Sulfuric Acid Plants
I	Hot Mix Asphalt Plants
J	Petroleum Refineries
Ja	Petroleum Refineries (built, reconstructed, or modified after May 14, 2007)
K	Storage Vessels for Petroleum Liquids (built, reconstructed, or modified after June 11, 1973 and prior to May 19, 1978)
Ka	Storage Vessels for Petroleum Liquids (built, reconstructed or modified after May 18, 1978 and prior to July 23, 1984)
Kb	Storage Vessels for VOCs (built, reconstructed, or modified after July 23, 1984)
L	Secondary Lead Smelters
M	Secondary Brass and Bronze Ingot Production
N	Primary Emissions from Basic Oxygen Process Furnaces (built after June 11, 1973)
Na	Secondary Emissions from Basic Oxygen Process Furnaces (built after January 20, 1983)
O	Sewage Treatment Plants
P	Primary Copper Smelters
Q	Primary Zinc Smelters
R	Primary Lead Smelters
S	Primary Aluminum Reduction Plants
T	Phosphate Fertilizer Industry: Wet Process Phosphoric Acid Plants
U	Phosphate Fertilizer Industry: Superphosphoric Acid Plants
V	Phosphate Fertilizer Industry: Diammonium Phosphate Plants
W	Phosphate Fertilizer Industry: Triple Superphosphate Plants
X	Phosphate Fertilizer Industry: Granular Triple Superphosphate Storage
Y	Coal Preparation and Processing Plants
Z	Ferroalloy Production Facilities
AA	Steel Plants: Electric Arc Furnaces (built between October 21, 1974 and August 17, 1983)
AAa	Steel Plants: Electric Arc Furnaces, Argon-Oxygen Decarburization Vessels (built after August 17, 1983)
BB	Kraft Pulp Mills
CC	Glass Manufacturing Plants
DD	Grain Elevators

Table 1-1. New Source Performance Standards (NSPS) (40 CFR 60 subparts) as of September 25, 2012.	
EE	Surface Coating of Metal Furniture
GG	Stationary Gas Turbines
HH	Lime Plants
KK	Lead-Acid Battery Manufacture
LL	Metallic Mineral Processing Plants
MM	Automobile and Light-Duty Truck Surface Coating Operations
NN	Phosphate Rock Plants
PP	Ammonium Sulfate Manufacture Plants
QQ	Graphic Art Industry Publication Rotogravure Printing
RR	Pressure Sensitive Tape and Label Surface Coating Operations
SS	Industrial Surface Coating: Large Appliances
TT	Metal Coil Surface Coating
UU	Asphalt Processing and Asphalt Roofing Manufacture
VV	Equipment Leaks of Volatile Organic Compounds (VOC) in Synthetic Organic Chemical Manufacturing Industry (Built, renovated, or modified between January 5,1981 and November 7, 2006
VVa	Equipment Leaks of VOC in Sythetic Organic Chemicals Manufacturing (built, renovated, or modified after November 7, 2006)
WW	Beverage Can Surface Coating Industry
XX	Bulk Gasoline Terminals
AAA	New Residential Wood Heaters
BBB	VOC Emissions from the Rubber Tire Manufacturing Industry
DDD	VOC Emissions from the Polymer Manufacturing Industry
FFF	Flexible Vinyl and Urethane Coating and Printing
GGG	Equipment Leaks of VOC in Petroleum Refineries
GGGa	Equipment Leaks of VOC in Petroleum Refineries (commenced after November 7, 2006)
HHH	Synthetic Fiber Production Facilities
III	VOC Emissions from the Synthetic Organic Chemical Manufacturing Industry (SOCMI) Air Oxidation Units
JJJ	Petroleum Dry Cleaners
KKK	Equipment Leaks of VOC from Onshore Natural Gas Processing
LLL	Onshore Natural Gas Processing Plants: SO_2 Emissions
NNN	VOC Emissions from the SOCMI Distillation Operations
OOO	Nonmetallic Mineral Processing Plants
PPP	Wool Fiberglass Insulation Manufacturing Plants
QQQ	Petroleum Refinery Wastewater Systems

Table 1-1. New Source Performance Standards (NSPS) (40 CFR 60 subparts) as of September 25, 2012.	
RRR	VOC Emissions from Synthetic Organic Chemical Mfg. (SOCMI) Reactor Processes
SSS	Magnetic Tape Coating Facilities
TTT	Industrial Surface Coating of Plastic Parts for Business Machines
UUU	Calciners and Dryers in Mineral Industries
VVV	Polymeric Coating of Supporting Substrate Facilities
WWW	Municipal Solid Waste Landfills
AAAA	Small Municipal Waste Combustion Units (built after August 30, 1999 or modified, or reconstructed after June 6, 2001)
BBBB	Emission Guidelines and Compliance Times for Small Municipal Waste Combustion Units (constructed after August 30, 1999)
CCCC	Industrial Solid Waste Incinerators (built after November 30, 1999 or modified or reconstructed after June 1, 2001)
DDDD	Emission Guidelines for Industrial Waste Incinerators (built before November 30, 1999)
EEEE	Other Solid Waste Incinerators (built after December 9, 2004 or modified or reconstructed after June 16, 2004)
FFFF	Emission Guidelines and Compliance Times for Other Solid Waste Incinerators (built before December 9, 2004)
HHHH	Emission Guidelines and Compliance Times for Coal-Fired Electric Steam Generating Units
IIII	Standards of Performance for Stationary Compression Ignition Internal Combustion Engines
JJJJ	Standards of Performance for Stationary Spark Ignition Internal Combustion Engines
KKKK	Standards of Performance for Stationary Combustion Turbines
LLLL	Standards of Performance for New Sewage Sludge Incineration Units
MMMM	Emission Guidelines and Compliance Times for Existing Sewage Sludge Incineration Units

State requirements can be found in state environmental regulations and, more specifically, in source operating permits. The states must also meet certain requirements specified by EPA in 40 CFR Part 51. Each state must develop a State Implementation Plan (SIP), detailing how it will meet ambient air quality standards.

The Code of Federal Regulations is continually changing. Old requirements may be revised or new standards may be incorporated. Such changes first appear as proposals in the Federal Register (FR), a daily government publication. After public discussion and comment, the proposed rules are revised and published in the Federal Register. The final rules are then incorporated in the next issue of the Code of Federal Regulations.

Particulate emission standards for new sources are found in many of the CFR subparts. Some examples of current NSPS particulate matter emission standards are listed in Table 1-2.

Table 1-2. Examples of New Source Performance Standards (NSPS) for particulate matter emissions from selected sources (40 CFR 60 subparts) as of September 25, 2012.

Subpart Letter	Source Category	Metric Units	English Units
Cb	Emission Guidelines Municipal Waste Combustors	27 mg/dscm @ 7% O_2	0.012 gr/dscf @ 7% O_2
Ce	Emission Guidelines Hospital/Medical/Infectious Waste Incinerators	115 mg/dscm (small) 69 mg/dscm (medium) 34 mg/dscm (large) @ 7% O_2	0.05 gr/dscf 0.03 gr/dscf 0.015 gr/dscf @ 7% O_2
D	Fossil-Fuel Fired Steam Generators	43 ng/J	0.10 lb/MMBtu
Da	Electric Utility Steam Generating Units	Construction, reconstruction or modification before March 1, 2005: 13 ng/J Or after February 28, 2005, but before May 4, 2011: 18 ng/J (energy output) or 6.4 ng/J (heat input) Construction/ reconstruction alternative: 13 ng/J heat input and either a 99.9% reduction (construction or reconstruction) or a 99.8% reduction (modification); After May 3, 2011: 11 ng/J (gross energy output), 12 ng/J (net energy output); Modification after May 3, 2011: 13 ng/J	Construction, reconstruction or modification before March 1, 2005: 0.030 lb/MMBtu; Or after February 28, 2005, but before May 4, 2011: 0.14 lb/MWh (energy output) or 0.015 lb/MMBtu (heat input); Construction/ reconstruction alternative: 0.030 lb/MMBtu heat input and either a 99.9% reduction or a 99.8% reduction (modification); After May 3, 2011: 0.090 lb/MWh (gross energy output), 0.097 lb/MWh (net energy output); Modification after May 3, 2011: 0.015 lb/MMBtu
Db	Industrial-Commercial-Institutional Steam Generating Units	22 ng/J (coal, with other fuels burning < 10% of the time)	0.051 lb/MMBtu (coal, with other fuels burning < 10% of the time)
		43 ng/J (coal and >10% other fuels)	0.10 lb/MMBtu (coal and >10% other fuels)
		86 ng/J (coal and <30% other fuels – max heat input of 73 MW; construction after June 19, 1984 and before November 25, 1986)	0.20 lb/MMBtu (coal and <30% other fuels – max heat input of 250 MMBtu/hr; construction after June 19, 1984 and before November 25, 1986)
		Construction, reconstruction or modification after February 28, 2005, combusting oil or mixtures of oil and other fuels: 43 ng/J	Construction, reconstruction or modification after February 28, 2005, combusting oil or mixtures of oil and other fuels: 0.10 lb/MMBtu

Table 1-2. Examples of New Source Performance Standards (NSPS) for particulate matter emissions from selected sources (40 CFR 60 subparts) as of September 25, 2012.

Subpart Letter	Source Category	Metric Units	English Units
		73 MW or less, construction, reconstruction or modification on or before February 28, 2005, combusting wood or wood with other fuels (except coal): 43 ng/J (annual capacity factor > 30% for wood); 86 ng/J (annual capacity factor less than or equal to 30% for wood)	250 MMBtu/hr or less, construction, reconstruction or modification on or before February 28, 2005, combusting wood or wood with other fuels (except coal): 0.10 lb/MMBtu (annual capacity factor > 30% for wood); 0.20 lb/MMBtu (annual capacity factor less than or equal to 30% for wood)
		75 MW or less, construction after June 19, 1984 but on or before November 25, 1986: 43 ng/J (only municipal solid waste); 86 ng/J (MSW and other fuels 30% or less)	250 MMBtu/hr or less, construction after June 19, 1984 but on or before November 25, 1986: 0.10 lb/MMBtu (only municipal solid waste); 0.20 lb/MMBtu (MSW and other fuels 30% or less)
		Construction, reconstruction or modification after February 28, 2005, combusting coal, oil, wood or a mixture of these fuels or a mixture of these with any other fuels: 13 ng/J Alternatively: 22 ng/J and 99.8% reduction	Construction, reconstruction or modification after February 28, 2005, combusting coal, oil, wood or a mixture of these fuels or a mixture of these with any other fuels: 0.030 lb/MMBtu Alternatively: 0.051 lb/MMBtu and 99.8% reduction
		Modification after February 28, 2005, over 30% wood (by heat input), and 73 MW or less: 43 ng/J	Modification after February 28, 2005, over 30% wood (by heat input), and 250 MMBtu/hr or less: 0.10 lb/MMBtu
		Modification after February 28, 2005, over 30% wood (by heat input), and greater than 73 MW: 37 ng/J	Modification after February 28, 2005, over 30% wood (by heat input), and greater than 250 MMBtu/hr: 0.085 lb/MMBtu
Dc	Industrial-Commercial-Institutional Steam Generating Units	22 ng/J 43 ng/J	0.05 lb/MMBtu (coal) 0.10 lb/MMBtu (coal + other fuels
E	Incinerators	0.18 g/dscm	0.08 gr/dscf (corr. to 12% CO_2)
Ea	Municipal Waste Combustors (Metals)	34 mg/dscm (2 to 7% O_2)	0.015 gr/dscf (corr. to 7% O_2)
Eb	Large Municipal Waste Combustors	After Sept 20, 1994 and on or before Dec 19, 2005, 24 mg/dscm (7% O_2) After Dec 19, 2005, 20 mg/dscm (7% O_2)	
Ec	Hospital/Medical/Infectious Waste Incinerators	Construction after June 20, 1996 and before Dec 1, 2008, or modification after March 16, 1998 and before April 6, 2008) 69 mg/dscm (small)	0.03 gr/dscf (small) 0.015 gr/dscf (med, large) (7% O_2, dry basis)

Table 1-2. Examples of New Source Performance Standards (NSPS) for particulate matter emissions from selected sources (40 CFR 60 subparts) as of September 25, 2012.

Subpart Letter	Source Category	Metric Units	English Units
		34 mg/dscm (med, large) 7% O_2, dry basis	
		Construction after Dec 1, 2008 or modification after Apr 6, 2010 66 mg/dscm (small) 22 mg/dscm O(medium) : 18 mg/dscm (large) 7% O_2, dry basis	0.029 gr/dscf (small) 0.0095 gr/dscf (med) 0.0080 gr/dscf (large) 7% O_2, dry basis
F	Portland Cement Plants		Kiln: 0.30 lb/ton of feed (kiln construction, reconstruction or modification between August 17, 1971 and June 16, 2008); or 0.01 lb/ton of clinker on a 30 day rolling avg. or after June 16, 2008
			Clinker Cooler: 0.10 lb/ton of feed (kiln construction, reconstruction or modification between August 17, 1971 and June 16, 2008); or 0.01 lb/ton of clinker on a 30 day rolling avg. or after June 16, 2008
I	Hot Mix Asphalt Plants	90 mg/dscm	0.04 gr/dscf
J	Petroleum Refineries (Incremental Rate)	1.0 kg/Mg of coke burnoff (FCCU) 43 g/GJ for incineration	2.0 lb/ton of coke burnoff (FCCU) 0.10 lb/MMBtu for incineration
Ja	Petroleum Refineries	Modified or reconstructed FCCU: 1.0 kg/Mg of coke burnoff New FCCU: 0.5 g/kg of coke burnoff FCU: 1.0 kg/Mg of coke burnoff	Modified or reconstructed FCCU: 1.0 lb/1000 lbs of coke burnoff (0.040 gr/dscf if CEMS is used) New FCCU: 0.5 lb/1000 lbs of coke burnoff (0.020 gr/dscf if CEMS is used) FCU: 1.0 lb/1000 lbs of coke burnoff (0.040 gr/dscf if CEMS is used)
L	Secondary Lead Smelters	50 mg/dscm	0.022 gr/dscf
M	Secondary Brass and Bronze Ingot Production	50 mg/dscm	0.022 gr/dscf
N	Basic Oxygen Process Furnaces	50 mg/dscm For facilities constructed, modified or reconstructed after Jan 20, 1983, 50 mg/dscm, as measured for the primary oxygen blow. For facilities using closed hooding to control primary	0.022 gr/dscf For facilities constructed, modified or reconstructed after Jan 20, 1983, 0.022 gr/dscf, as measured for the primary oxygen blow. For facilities using closed hooding to control primary emissions, 0.030 gr/dscf, as measured for the

Table 1-2. Examples of New Source Performance Standards (NSPS) for particulate matter emissions from selected sources (40 CFR 60 subparts) as of September 25, 2012.

Subpart Letter	Source Category	Metric Units	English Units
		emissions, 68 mg/dscm, as measured for the primary oxygen blow.	primary oxygen blow.
Na	Basic Oxygen Process Steel Making Facilities	23 mg/dscm	0.010 gr/dscf
O	Sewage Treatment Plants	0.65 g/kg dry sludge input	1.30 lb/ton dry sludge input
P	Primary Copper Smelters	50 mg/dscm	0.022 gr/dscf
Q	Primary Zinc Smelters	50 mg/dscm	0.022 gr/dscf
R	Primary Lead Smelters	50 mg/dscm	0.022 gr/dscf
Y	Coal Preparation Plants	0.070 g/dscm for thermal dryers constructed, reconstructed or modified on or before April 28, 2008; 0.023 gr/dscf for thermal dryers constructed or reconstructed after April 28, 2008; 0.070 gr/dscf for thermal dryers modified after April 28, 2008	0.031 gr/dscf for thermal dryers constructed, reconstructed or modified on or before April 28, 2008; 0.01 gr/dscf for thermal dryers constructed or reconstructed after April 28, 2008; 0.031 gr/dscf for thermal dryers modified after April 28, 2008
		0.040 g/dscm for coal cleaning equipment constructed, reconstructed or modified on or before April 28, 2008; 0.023 g/dscm for coal cleaning equipment constructed, reconstructed or modified after April 28, 2008	0.017 gr/dscf for coal cleaning equipment constructed, reconstructed or modified on or before April 28, 2008; 0.010 gr/dscf for coal cleaning equipment constructed, reconstructed or modified after April 28, 2008
		0.023 g/dscm from any mechanical vent for coal processing and conveying equipment, coal storage system, or coal transfer and loading system constructed, reconstructed, or modified after April 28, 2008	0.010 gr/dscf from any mechanical vent for coal processing and conveying equipment, coal storage system, or coal transfer and loading system constructed, reconstructed, or modified after April 28, 2008
Z	Ferroalloy Production Facilities	0.45 kg/MW-hr 0.23 Kg/MW-hr	0.99 lb/MW-hr 0.51 lb/MW-hr
AA	Steel Plants – Electric Arc Furnaces	12 mg/dscm	0.0052 gr/dscf
AAAA	Small Municipal Waste Combustion Units	24 mg/dscm	
CCCC	Industrial Waste Incinerators	70 mg/dscm	
I I I I	Standards of Performance for Stationary Compression Ignition Internal Combustion Engines	0.2 – 1.0 g/KW-hr, dependent on engine size	0.15 – 0.75 g/ HP-hr, dependent on engine size

Note from Table 1-2 that the NSPS standards are expressed in different forms, such as concentration (gr/dscf), mass rate (lb/hr), or in terms of product produced (lb/10^6 Btu, lb/ton). The methods of calculating these parameters are relatively straightforward and will be discussed later in this manual.

1.5 THE EPA SOURCE TESTING REFERENCE METHODS

THE TEST METHODS NUMBERING SYSTEM

Several offices within the EPA develop methods for measuring air pollution emissions. The numbering system for these methods indicates which EPA division office is responsible for a particular method.

The Emission Measurement Center (EMC) (http://www.epa.gov/ttn/emc/) is responsible for methods that have method numbers between 1 and the 300s. These methods have between 1 and 3 digits with no decimal points, such as EPA Method 5 or EPA Method 308. A method can also have variations denoted by letters, such as EPA Method 5C. Method numbers or Performance Specifications between 1 and 100 are for New Source Performance Standards (NSPS). These methods are found in 40 CFR Part 60, Appendix A.

Method numbers in the 100 series are for the National Emission Standards for Hazardous Air Pollutants (NESHAPs). These methods are found in 40 CFR Part 61, Appendix B.

Method numbers in the 200 series are for inclusion in State Implementation Plans (SIPs). These methods are found in 40 CFR Part 51, Appendix M.

Method numbers in the 300 series are for the Maximum Achievable Control Technology (MACT) standards. These methods are found in 40 CFR Part 63, Appendix A.

The Office of Solid Waste (OSW)(http://www.epa.gov/epawaste/index.htm) is responsible for methods that are always 4 digits with no decimal points. Examples of OSW methods are EPA Method 0010 and EPA Method 8240.
The Office of Water (OW) (http://www.epa.gov/OW/) is responsible for methods that are either 4 digits with a decimal point (if the number is under 500) or 3 digits (over 600), such as EPA Method 101.1 or EPA Method 608. The only exception is the 1600 series, which is 4 digits with no decimal points.

The Office of Ambient Air Monitoring Group (AAMG) (http://www.epa.gov/ttn/amtic/) is responsible for methods that are always preceded by a TO (Toxic Organics). An example of an AAMG method is EPA Method TO-15.

THE EMISSION MEASUREMENT CENTER (EMC)

The Emission Measurement Center (EMC) of the EPA Office of Air Quality Planning and Standards (OAQPS) provides national leadership in furthering the science of characterizing and measuring air pollutant emissions. Acting as a bridge between the research scientists in EPA's Office for Research and Development (ORD) and those in OAQPS developing national performance and emissions standards, the Center has produced nearly one hundred methods for measuring air pollutants emitted

from industrial processes causing air pollution. The EMC is also a bridge between the regulators and the regulated community in providing technical expertise and guidance necessary to implement the rules, especially in applying emission testing methods for pollution control evaluations, compliance determinations, and performance testing. The EMC is the EPA's focal point for planning and conducting field test programs to provide quality data in support of regulatory development, producing validated emission test methods, and providing expert technical assistance for EPA, state, and local enforcement officials and industrial representatives involved in emission testing.

The EMC is also known as the Measurement Technology Group, and is part of the Quality Assessment Division in the EPA's Office of Air Quality Planning and Standards (OAQPS).

Guideline Documents and Information Documents

The EMC's *Guideline Documents* at http://www.epa.gov/ttn/emc/guidlnd.html clarify undefined technical areas of methods and performance specifications, set policy for the methods and monitoring where the method does not address the particular application necessarily, and describe alternatives to sampling procedures within the methods or performance specifications. Some of the guidance may result in changes to the methods or performance specifications.

The EMC's *Information Documents* at http://www.epa.gov/ttn/emc/informd.html explain the derivation of factors, equations, and procedures, and provide technical information necessary for regulatory agencies to make decisions about acceptance of data and alternative methods and monitoring.

EMC's Test Method Categories

A fundamental component of the EMC website is to provide information regarding relevant methods and procedures for emission testing and monitoring. The four categories are based on the legal status of the methods with regard to their application under federally enforceable regulations. Each category is explained below and each includes stipulations for use of the methods included therein. Further provisions regarding the use of a specific method are contained within the applicability statement of the method. Guidance provided by these categories and methods is meant to supplement, not override, the stationary source emission measurement requirements of Title 40 of the Code of Federal Regulations (CFR) Parts 51, 60, 61, and 63.

Test methods can be divided into the following several categories.

Category A: Methods Proposed or Promulgated in the FR

These methods have been proposed or promulgated in the Federal Register and codified in the Code of Federal Regulations (CFR). They carry an xx, 1xx, 2xx, or 3xx alphanumeric designation. The xx, 1xx, and 3xx numbered methods are directly cited by specific regulations for determining compliance under 40 CFR Parts 60, 61, and 63, and may be used by sources for the application as cited by the regulations and the method itself without further EPA approval. The 2xx series methods are promulgated to facilitate incorporation in applicable State Implementation Plans. The 2xx methods, like the xx, 1xx, and 3xx series methods, include quality control (QC) and quality assurance (QA) procedures that must be met.

Category B: Source Category Approved Alternative Methods

These methods are approved alternatives to the methods required by 40 CFR Parts 60, 61, and 63, as described by the General Provisions of the corresponding Parts and as further explained in a Federal Register notice dated January 30, 2007. As such, the methods may be used by sources for determining compliance with the requirements of these Parts per their specified applicability provisions without further EPA approval. The administrator or designee (group leader of the Measurement Technology Group in the Air Quality Assessment Division of the Office of Air Quality Planning and Standards) has approved these methods for the specified applications; this approval has been documented through an official EPA letter. These methods include QC and QA procedures that must be met. The EPA staff may not necessarily be the technical experts on these methods.

Category C: Other Methods

This category includes test methods, which have not yet been subject to the federal rulemaking process. Each of these methods, as well as the available technical documentation supporting them, have been reviewed by the EMC staff and have been found to be potentially useful to the emission measurement community. The types of technical information reviewed include field and laboratory validation studies, results of collaborative testing, articles from peer-reviewed journals, peer-review comments, and QA and QC procedures in the method itself. The EPA strongly encourages the submission of additional supporting field and laboratory data as well as comments regarding these methods.

These methods may be considered for use in federally enforceable state and local programs (e.g., Title V permits, SIP, provided they are subject to an EPA Regional SIP approval process or permit veto opportunity and public notice with the opportunity for comment. The methods may also be considered to be candidates for alternative methods to meet federal requirements under 40 CFR Parts 60, 61, and 63. However, they must be approved as alternatives under 60.8, 61.13, or 63.7(f) before a source may use them for this purpose.

Consideration of a method's applicability for a particular purpose should be based on the stated applicability as well as the supporting technical information outlined in the method. The methods are available for application without EPA oversight for other non-EPA program uses, including state permitting programs and scientific and engineering applications. These methods are subject to change based on the review of additional validation studies or on public comment as a part of adoption as a federal test method, the Title V permitting process, or inclusion in a SIP.

Category D: Historic Conditional Methods

This category includes methods that were categorized as conditional test methods before EPA method categories were revised. Some of these methods have been cited in state rules and permits under their Conditional Test Method (CTM) designation, and are designated as *Historic Conditional Methods*. This category is closed and no new methods will be added to it.

These CTMs have been evaluated by EPA and may be applicable to one or more categories of stationary sources. The EPA confidence in a method included in this category is based upon review of various technical information including, but not limited to, field and laboratory validation studies, EPA understanding of the most significant QA and QC issues, and EPA confirmation that the method addresses these QA/QC issues sufficiently to identify when the method may not be acquiring representative data. The method's QA/QC procedures are required as a condition of applicability.

CTMs in Category D may be used by state and local programs in conjunction with federally enforceable programs (e.g., Title V permits, SIP, provided they are subject to an EPA Regional SIP approval process or permit veto opportunity and public notice and opportunity for comment.) They are available for application without EPA oversight for other non-EPA program uses, including state permitting programs and scientific and engineering applications.

The methods in Category D, however, must be approved as alternatives before a source may use them to meet federal requirements under 40 CFR Parts 60, 61, and 63. The EPA encourages the submission of additional field and laboratory data to further support a method. These methods are potentially subject to change based on the review of additional validation studies or on public comment as a part of adoption as a federal test method (Category A).

SOURCE TESTING ACCURACY AND REFERENCE METHODS

The source tester extracts samples from a stack or duct and analyzes the samples to determine the levels of particulate matter and gases emitted. The source tester frequently works on platforms 200 to 300 feet up the stack, on catwalks beside ductwork, or in the annular spacing between the stack liner and stack. The work is often exciting (one goes to high places quickly in this business), grueling, tedious, and sometimes dangerous. But it does require a technical knowledge of source operations and testing methods, in addition to a lot of common sense.

The testing methods are defined and standardized for different source categories. Each source is somewhat different. Sampling situations can be difficult – attempting to obtain a representative flue gas sample on an exposed platform during the heat of summer or cold of winter is not the same as performing a test in a laboratory. As a result of these realities, the source test methods have been developed in order that samples can be obtained in a reasonable length of time at relatively reasonable cost, without sacrificing their technical viability.

Accuracy in source testing is somewhat hard to define. No one can actually know the *true* value of an emission parameter. We could perhaps collect all the flue gas emitted from a stack and weigh all the particulate matter found, but this is certainly not practical. Instead, test methods are developed, evaluated, checked, and cross-checked with other methods and data to validate their use. Collaborative tests conducted by teams of source testers help to establish the test method precision. In the end, the test methods do incorporate practical compromises, but once promulgated by regulation, they become the *reference method* to which other data is to be compared, such as engineering data or continuous emission monitoring (CEM) data.

Table 1-3. List of U.S. EPA reference methods (40 CFR Part 60, Appendix A).
New Source Performance Standards (40 CFR Part 60, Appendix A- Test Methods)
Method 1 – Sample and velocity traverses for stationary sources
Method 1A – Sample and velocity traverses for stationary sources with small stacks or ducts
Method 2 – Determination of stack gas velocity and volumetric flow rate (Type S pitot tube)
Method 2A – Direct measurement of gas volume through pipes and small ducts
Method 2B – Determination of exhaust gas volume flow rate from gasoline vapor incinerators
Method 2C – Determination of stack gas velocity and volumetric flow rate in small stack or ducts (standard pitot tube)

Method 2D – Measurement of gas volumetric flow rates in small pipes and ducts

Method 2E – Determination of landfill gas production flow rate

Method 3 – Gas analysis for carbon dioxide, oxygen excess air, and dry molecular weight

Method 3A – Determination of oxygen and carbon dioxide concentrations in emissions from stationary sources (instrumental analyzer procedure)

Method 3B – Gas analysis for the determination of emission rate correction factor or excess air

Method 3C – Determination of carbon dioxide, methane, nitrogen, and oxygen from stationary sources

Method 4 – Determination of moisture content in stack gases

Method 5 – Determination of particulate emissions from stationary sources

Method 5A – Determination of particulate emissions from the asphalt processing and asphalt roofing industry

Method 5B – Determination of nonsulfuric acid particulate matter from stationary sources

Method 5C [Reserved]

Method 5D – Determination of particulate emissions from positive pressure fabric filters

Method 5E – Determination of particulate emissions from the wool fiberglass insulation manufacturing industry

Method 5F – Determination of nonsulfate particulate matter from stationary sources

Method 5G – Determination of particulate emissions from wood heaters from a dilution tunnel sampling location

Method 5H – Determination of particulate emissions from wood heaters from a stack location

Method 5I – Determination of low level particulate matter emissions from stationary sources

Method 6 – Determination of sulfur dioxide emissions from stationary sources

Method 6A – Determination of sulfur dioxide, moisture, and carbon dioxide emissions from fossil fuel combustion sources

Method 6B – Determination of sulfur dioxide and carbon dioxide daily average emission from fossil fuel combustion source

Method 6C – Determination of sulfur dioxide emission from stationary sources (instrumental analyzer procedure)

Method 7 – Determination of nitrogen oxide emissions from stationary sources

Method 7A – Determination of nitrogen oxide emissions from stationary sources – ion chromatographic method

Method 7B – Determination of nitrogen oxide emissions from stationary sources (ultraviolet spectrophotometry)

Method 7C – Determination of nitrogen oxide emissions from stationary sources –alkaline-permanganate/colorimetric method

Method 7D – Determination of nitrogen oxide emissions, from stationary sources – alkaline-permanganate/ion chromatographic method

Method 7E – Determination of nitrogen oxides emissions from stationary sources (instrumental analyzer procedure)

Method 8 – Determination of sulfuric acid mist and sulfur dioxide emissions from stationary sources

Method 9 – Visual determination of the opacity of emissions from stationary sources *Alternate method I* – Determination of the opacity of emissions from stationary sources remotely by lidar

Method 10 – Determination of carbon monoxide emissions from stationary sources

Method 10A – Determination of carbon monoxide emissions in certifying continuous emissions

monitoring systems at petroleum refineries

Method 10B – Determination of carbon monoxide emissions from stationary sources

Method 11 – Determination of hydrogen sulfide content of fuel gas streams in petroleum refineries

Method 12 – Determination of inorganic lead emissions from stationary sources

Method 13A – Determination of total fluoride emissions from stationary sources – SPADNS zirconium lake method

Method 13B – Determination of total fluoride emissions from stationary sources – specific ion electrode method

Method 14 – Determination of fluoride emissions from potroom roof monitors for primary aluminum plants

Method 15 – Determination of hydrogen sulfide, carbonyl sulfide, and carbon disulfide emissions from stationary sources

Method 15A – Determination of total reduced sulfur emissions from sulfur recovery plants in petroleum refineries

Method 16 – Semicontinuous determination of sulfur emissions from stationary sources

Method 16A – Determination of total reduced sulfur emissions from stationary sources (impinger technique)

Method 16B – Determination of total reduced sulfur emissions from stationary sources

Method 17 – Determination of particulate emissions from stationary sources (in-stack filtration method)

Method 18 – Measurement of gaseous or organic compound emissions by gas chromatography

Method 19 – Determination of sulfur dioxide removal efficiency and particulate, sulfur dioxide and nitrogen oxides emission rates

Method 20 – Determination of nitrogen oxides, sulfur dioxide, and diluent emissions from stationary gas turbines

Method 21 – Determination of volatile organic compound leaks

Method 22 – Visual determination of fugitive emissions from material sources and smoke emissions from flares

Method 23 – Determination of polychlorinated dibenzo-p-dioxins and polychlorinated dibenzofurans from stationary sources

Method 24 – Determination of volatile matter content, water content, density, volume solids, and weight solids of surface coatings

Method 24A – Determination of volatile matter content and density of printing inks and related coatings

Method 25 – Determination of total gaseous non-methane organic emissions as carbon

Method 25A – Determination of total gaseous organic concentration using a flame ionization analyzer

Method 25B – Determination of total gaseous organic concentration using a non-dispersive infrared analyzer

Method 25C - Determination of non-methane organic compounds (NMOC) in landfill gases

Method 26 – Determination of hydrogen chloride emissions from stationary sources

Method 26A – Determination of hydrogen halide and halogen emissions from stationary sources isokinetic method

Method 27 – Determination of vapor tightness of gasoline delivery tank using pressure-vacuum test

Method 28 – Certification and auditing of wood heaters

Method 28A – Measurement of air-to-fuel ratio and minimum achievable burn rates for wood-fired appliances

Method 29 – Determination of metals emissions from stationary sources

NESHAP Test Methods (40 CFR Part 61 Appendix B)

Method 101 – Determination of particulate and gaseous mercury emissions from chlor-alkali plants (air streams)

Method 101A – Determination of particulate and gaseous mercury emissions from sewage sludge incinerators

Method 102 – Determination of particulate and gaseous mercury emissions from chlor-alkali plants (hydrogen streams)

Method 103 – Determining beryllium emissions in ducts or stacks at stationary sources

Method 104 – Determination of beryllium emissions from stationary sources

Method 105 – Determination of mercury in wastewater treatment plant sewage sludges

Method 106 – Determination of vinyl chloride emissions from stationary sources

Method 107 – Determination of vinyl chloride content of inprocess wastewater samples, and vinyl chloride content of polyvinyl chloride resin, slurry, wet cake, and latex samples

Method 107a – Determination of vinyl chloride content of solvents, resin-solvent solution, polyvinyl chloride resin, resin slurry, wet resin, and latex samples

Method 108 – Determination of particulate and gaseous arsenic emissions

Method 108a – Determination of arsenic content in ore samples from nonferrous smelters

Method 108b – Determination of arsenic content in ore samples from nonferrous smelters

Method 108c – Determination of arsenic content in ore samples from nonferrous smelters (molybdenum blue photometric procedure)

Method 111 – Determination of polonium-210 emissions from stationary sources

Method 114 – Test methods for measuring radionuclide emission from stationary sources

Method 115 – Monitoring for radon-222 emissions

State Implementation Plans (40 CFR Part 51 Appendix M)

Method 201 – Determination of PM_{10} emissions (exhaust gas recycle procedure)

Method 201a – Determination of PM_{10} and $PM_{2.5}$ emissions from stationary sources (constant sampling rate procedure)

Method 202 – Dry impinger method for determining condensable particulate emissions from stationary sources.

Method 203a,b,c – visual determination of opacity of emissions from stationary sources for time-averaged regulations

Method 204 – Criteria for and verification of a permanent or temporary total enclosure

Method 204a – Volatile organic compounds content in liquid input stream

Method 204b – Volatile organic compounds emissions in captured stream

Method 204c – Volatile organic compounds emissions in captured stream (dilution technique)

Method 204d – Volatile organic compounds emissions in uncaptured stream from temporary total enclosure

Method 204e – Volatile organic compounds emissions in uncaptured stream from building enclosure

Method 204f – Volatile organic compounds content in liquid input stream (distillation approach)

Method 205 – Verification of gas dilution systems for field instrument calibrations

MACT Test Methods (40 CFR Part 63 Appendix A)

Method 301 – Field validation of pollutant measurement methods from various waste media

Method 303 – Determination of visible emissions from by-product coke oven batteries

Method 303a – Determination of visible emissions from non-recovery coke oven batteries

Method 304a – Determination of biodegradation rates of organic compounds (vent option)

Method 304b – Determination of biodegradation rates of organic compounds (scrubber option)

Method 305 – Measurement of emission potential of individual volatile organic compounds in waste

Method 306 – Determination of chromium emissions from decorative and hard chromium electroplating and chromium anodizing operations - Isokinetic Method
Method 306a – Determination of chromium emissions from decorative and hard chromium electroplating and chromium anodizing operations – Mason Jar Method
Method 306b – Surface tension measurement for tanks used at decorative chromium electroplating and chromium anodizing facilities
Method 307 – Determination of emissions from halogenated solvent vapor cleaning machines using a liquid level procedure
Method 308 – Procedure for determination of methanol emission from stationary sources
Method 310a - Determination of residual hexane through gas chromatography
Method 310b – Determination of residual solvent through gas chromatography
Method 310c – Determination of Residual N-Hexane in EPDM rubber through gas chromatography
Method 311 – Analysis of hazardous air pollutant compounds in paints and coatings by direct injection into a gas chromatograph
Method 312a – Determination of styrene in latex styrene-butadiene rubber, through gas chromatography
Method 312b – Determination of residual styrene in styrene-butadiene (SBR) rubber latex by capillary gas chromatography
Method 312c – Determination of residual styrene in SBR latex produced by emulsion polymerization
Method 313a – Determination of residual hydrocarbons in rubber crumb
Method 313b – Determination of residual hydrocarbon in solution polymers by capillary gas chromatography
Method 315 – Determination of particulate and methylene chloride extractable matter (MCEM) from selected sources at primary aluminum production facilities
Method 316 – Sampling and analysis for formaldehyde emissions from stationary sources in the mineral wool and wool fiberglass industries
Method 318 – Extractive FTIR method for the measurement of emissions from the mineral wool and wool fiberglass industries
Method 320 – Measurement of vapor phase organic and inorganic emissions by extractive Fourier transform infrared (FTIR) spectroscopy
Method 321 – Measurement of gaseous hydrogen chloride emissions at Portland cement kilns by Fourier transform infrared (FTIR) spectroscopy
Method 323 – Measurement of formaldehyde emissions from natural gas-fired sources – acetyl acetone derivitization method

This instruction on particulate sampling will discuss the first five methods in detail:

- Method 1 – Sample and velocity traverses for stationary sources
- Method 2 – Determination of stack gas velocity and volumetric flow rate (Type S pitot tube)
- Method 3 – Gas analysis for carbon dioxide, oxygen, excess air, and dry molecular weight
- Method 4 – Determination of moisture content in stack gases
- Method 5 – Determination of particulate emissions from stationary sources

Methods 8, 13, and 17 are also used to collect particulate matter and incorporate modifications of the isokinetic sampling apparatus of Method 5. These methods indirectly define the flue gas particulate matter by specifying how the gas is to be sampled and will be addressed further in Chapter 8 when we discuss the definition of particulate matter. The test methods for pollutant gases, which comprise the remainder of the methods, are quite diverse and are applied for specified source categories. These will not be discussed here, since they are the subject of another topic: gas sampling and analysis.

Other particulate sampling methods are found in 40 CFR Part 51, Appendix M, as part of the "tool box" of methods that the states may use in implementing their programs. Method 201, the exhaust gas recycle (EGR) method, and Method 201A, the constant sampling rate (CSR) procedure for the determination of PM_{10}, can be found here.

As a final note, it should be recognized that other countries have developed and standardized their own test methods. In many cases, they differ significantly from the U.S. test methods. The fact that more than one method has been used for the same measurement raises the question as to which is better, or which one will more closely obtain the "true value." The answer to the question may never be known, but as long as *one* method is used consistently within a state or country, the data obtained will be consistent relative to the method established as a reference.

The International Standards Organization (ISO) is striving to obtain a wider, worldwide consistency by establishing international methods. This organization evaluates the different national methods and, by consensus, establishes a consistent set of procedures that can be used for national standards. Significantly, the European Community will be using the ISO methods in the future, so that data obtained will be comparable between the member countries. The ISO method for particulate sampling from stationary sources is ISO 9096, "Determination of Concentration and Mass Flow Rate of Particulate Material in Gas-Carrying Ducts – Manual Gravimetric Method."

Source testing methods are becoming more refined and standardized. In most cases, current source test methods can meet the present demands of regulatory agencies for representative and accurate data. However, with increasingly strict emission limitations, new challenges in testing arise. Changes in source test methods are becoming necessary in order to improve the accuracy of measurements at very low particulate emission levels. In addition, developments will be necessary for particle size measurements, continuous particulate measurements, and particle identification. In the future, as regulatory demands evolve, it is anticipated that source test methods will also evolve to meet the demands.

1.6 SUMMARY

SOURCE TESTING FOR PARTICULATE MATTER

This lesson provided an overview of the following:

- The nature and characteristics of particulate matter.
- $PM_{2.5}$ and PM_{10} national ambient air quality and particle sampling method.
- Emission sources and standards.
- Test methodologies for categories A, B, C, and D.
- The EPA's test method numbering system.
- The EPA source testing reference methods.

BIBLIOGRAPHY

Brenchley, D.L., C.P. Turley, and R. F. Yarmac. 1973. *Industrial Source Sampling.* Ann Arbor, MI: Ann Arbor Science.

Cooper, H.B.H., and A.T. Rossano. 1971. *Source Testing for Air Pollution Control.* Wilton, CT: Environmental Science Services.

Heyder, *1.,1.* Gebhart, G. Rudolph, C.F. Schiller, and W. Stahlhofen. 1986. Deposition of particles in the human respiratory tract in the size range 0.005-14 J.lm. *Journal of Aerosol Science* 17:811-825.

Office of the Federal Register National Archives and Records Administration. July I, 1987. National ambient air quality standards for particulate matter: Final rules. *Federal Register* 36:24633.

Office of the Federal Register National Archives and Records Administration. 1993. *Code of Federal Regulations,* Title 40 (Protection of Environment), Part 51.

Office of the Federal Register National Archives and Records Administration. 1993. *Code of Federal Regulations,* Title 40 (Protection of Environment), Part 60.

U.S. Environmental Protection Agency. 1973. *Collaborative Study of Method for Stack Gas Analysis and Determination of Moisture Fraction with Use of Method 5.* EPA 650/4-73-026.

U.S. Environmental Protection Agency. 1974. *Source Sampling for Particulate Emissions.* Air Pollution Training Institute, Research Triangle Park, NC.

U.S. Environmental Protection Agency. 1974. *Collaborative Study of Method for the Determination of Particulate Matter Emissions from Stationary Sources.* EPA 650/4-74-029.

U.S. Environmental Protection Agency. 1974. *Collaborative Study of Method for Determination of Stack Gas: Velocity and Volumetric Flow Rate in Conjunction with EPA Methods.* EPA 650/4-74-033.

U.S. Environmental Protection Agency. 1975. *Method for Obtaining Replicate Particulate Samples from Stationary Sources.* EPA 650/4-75-025.

U.S. Environmental Protection Agency. 1976. *Collaborative Study of Particulate Emissions Measurements by EPA Methods 2, 3, and 5 Using Paired Particulate Sampling Trains (Municipal Incinerators).* EPA G00/4-76-014.

CHAPTER 2

2.0 PROPERTIES OF GASES

2.1 OVERVIEW

PURPOSE

The purpose of this chapter is to introduce students to the basic science that underlies the particulate source test methods, including concepts of gas physics and the symbols and formulas that must be understood for the comprehension of the course material.

LEARNING OBJECTIVES

At the conclusion of this training, students will be able to:

- Define the symbols and common source sampling expressions used in the course.
- Write the expressions for absolute temperature and absolute pressure.
- Explain what molecular weight is and how it relates to the number of moles of a compound.
- Write the ideal gas law equation and describe the effects of changing pressure and temperature on a gas volume.
- Recognize the form of an ideal gas law correction equation.
- Recognize the pitot tube equation on sight and understand the relative importance of the parameters in the equation. (You will be required to memorize this equation.)
- Explain what parameters must be measured in order to determine a pollutant mass rate.

2.2 GAS STREAM SAMPLING

INTRODUCTION

As we will learn in Chapter 3, source testing for particulate matter (PM) involves extracting a sample from a stack or duct into a sampling train consisting of a heated filter, several impingers, a pump, a dry gas meter and an orifice meter. The ultimate goal of the source test utilizing a sampling train is to extract a sample which is representative of the constituent of interest in the stack gas so a determination of concentration in units of the standard can be obtained. Obtaining a representative sample from a stack or duct is a very complex task because process parameters of the source vary with both time and location within the stack. A strategy for obtaining a representative sample must be identified and determined depending upon the constituents of interest. Source characteristics can change according to its cross-sectional concentration and time variations.

In order to extract a representative sample from the source, one has to be concerned with the flow of the gas stream. In essence, during sampling, we are attempting to take a "representative sample of the flowing gas" and removing that piece into the sampling train. During sampling, the sampling train changes the characteristics of the representative extracted gas sample. It removes PM from the sampled gas, it cools the gas stream down and condenses out water from the sample gas in the impingers, and it measures the volume of gas sampled under these new gas conditions. These changes must be accounted for in the subsequent source calculations in order to accurately reflect the true concentration in the gas stream.

Therefore, one can see the importance of knowing as much information about the gas stream being sampled in order to extract a representative sample. Over the years, the EPA has presented various approaches for sampling a gas stream. They are:

- Constant Sampling Rate;
- Proportional Sampling Rate; and
- Isokinetic Sampling Rate.

CONSTANT SAMPLING RATE

When conditions within the stack yield steady state relating to concentration (i.e., no variation from point to point within the cross sectional area of the stack), then a single point measurement will yield a representative and accurate result. The measurement may be taken at any time and at any location within the stack. The constant sampling rate methodology is usually proposed when sampling for gaseous pollutants in a turbulent and well mixed gas stream. The cross-sectional concentration of a gaseous pollutant is usually uniform because of the diffusion and turbulent mixing processes within the gas stream. However, a constant sampling rate approach is not applicable to Federal Reference Method 5 application.

PROPORTIONAL SAMPLING RATE

Proportional sampling is used when there exist fluctuations of the source in relationship to varying constituents in the gas stream (i.e., typically velocity). Proportional sampling must be performed in order to provide a representative sample and hence an unbiased estimate of the pollutant mass rate. When performing a source test according to proportional sampling procedures, the nozzle velocity should be at some constant proportional to the stack gas velocity. In essence, in applying proportional sampling, one observes the velocity of the stack gas and increases or decreases the sampling rate through the sampling train proportionally.

ISOKINETIC SAMPLING RATE

Isokinetic sampling rate requires that the sample gas be drawn through the probe nozzle at the same rate that the stack gas is moving past the nozzle, therefore taking a "representative sample of the flowing gas" into the sampling train. As will be discussed in Chapter 3, isokinetic sampling is usually reserved for sampling PM in the stack gas. This is because particles do not always follow the streamlines of the gas moving in the stack or duct. Based upon their size, large particles, due to their inertia, will not follow the streamlines of the gas stream and will collide with the walls of the duct or penetrate through the streamlines when the gas stream takes a turn or bend in its direction. As we will learn in the upcoming chapters, there are various inputs which must be addressed in order to perform isokinetic sampling (e.g., nozzle diameter, moisture concentration of the stack gas, molecular weight of the stack gas etc.).

When performing isokinetic sampling, the velocity through the nozzle (v_n) is equal to the velocity of the stack gas stream (v_s), as illustrated in Equation 2-1.

(Eq. 2-1) $$v_n = v_s$$

As discussed earlier, the gas stream characteristics change in the sampling train during sampling due to the loss of PM and water. Therefore, these changes must be accounted for in order to maintain the same flow rate of gas through the nozzle of the sampling train to the same stack gas flow rate, therefore maintaining isokinetic sampling rate. As will be discussed in Chapter 3, the basic isokinetic rate equation, taking into consideration the various variables needed to be quantified, can be expressed in the following equation:

$$\Delta H = \left[846.72\, D_n^{\,4} \Delta H_{@} C_p^{\,2} \left(1 - B_{ws}\right)^2 \frac{M_d}{M_s} \frac{T_m}{T_s} \frac{P_s}{P_m} \right] \Delta P$$

Chapter 5
The Source Test (Nozzle Diameter)

Chapter 4
The First Four Reference Methods

Chapter 2
The Properties of Gases

Chapter 3
The Method 5 Sampling Train (Isokinetic Rate)

Reviewing the isokinetic rate equation, we see various stack gas variables such as stack gas temperature (T_s), stack gas pressure (P_s), stack gas moisture (B_{ws}), stack gas dry molecular weight (M_d) and stack gas wet molecular weight (M_s). Therefore, to understand stack testing, we must first understand how these variables are affected by the behavior of gases. We already understand much of this intuitively, but source testing is a quantitative discipline and we must be able to calculate exactly these variables as part of the testing discipline. Therefore, let's examine the various properties of gases.

GAS VOLUME

Gas volume is dependent upon three variables:

1. Amount of gas (quantity and composition)
2. Temperature
3. Pressure

These variables all have an effect on a volume of a sample gas. The resultant effect can be determined by using an expression called the **ideal gas law**[1]. The discussion given here will help give an understanding of this law and how we can use it in our source test calculations.

COMPOSITION

If we blow up a balloon, it will expand. It will become larger as we blow more air into it. The gas in the balloon will be principally composed of oxygen, nitrogen, carbon dioxide, water vapor, and small amounts of other molecules in a gaseous state. As long as the molecules are in a gaseous state, the size of the balloon will be dependent upon the number of molecules in the balloon (Figure 2-1).

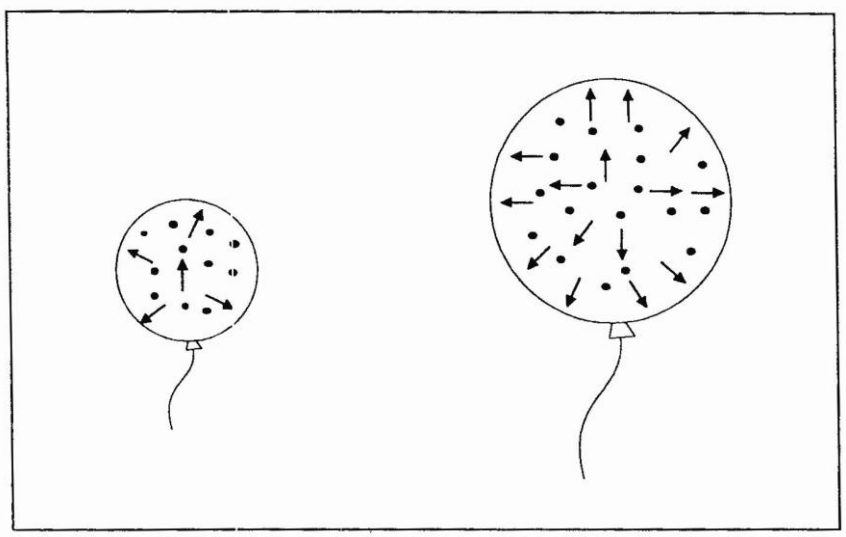

Figure 2-1. The volume of a balloon is dependent upon the quantity of air blown into it.

In 1811, the Italian physicist, Amadeus Avogadro, found that equal volumes of gas contain the same number of molecules at the same temperature and pressure. It was later determined that 1 cm^3 of gas contains 2.71×10^{19} atoms or molecules at 0°C and 1 atmosphere of pressure. A more common expression of this fact is that:

22.4 liters of gas at 0°C and 1 atmosphere of pressure contain 6.022×10^{23} atoms (or molecules). The number 6.022×10^{23} is known as **Avogadro's number.** You can learn more online (http://en.wikipedia.org/wiki/Avogadro%27s_number). *Avogandro's number* is important in completing chemical calculations. Let us examine why this should be important. First, consider that every atom has an atomic weight and every molecule has a molecular weight. The molecular weights for molecules commonly found in flue gases are given in Table 2-1.

Table 2-1. Molecular weights of common stack gas constituent.

Molecule	Symbol	Molecular Weight
Oxygen	O_2	32
Nitrogen	N_2	28
Water	H_2O	18
Carbon Dioxide	CO_2	44

Carbon Monoxide	CO	28
Sulfur Dioxide	SO_2	64
Nitric Oxide	NO	30

Basically, the molecular weights have been obtained by assigning an atomic weight of 12 to the carbon atom and then expressing all other atomic and molecular weights to the atomic weight of carbon as a standard. In other words, a sulfur dioxide molecule is 64/12 or 5.33 times as heavy as a carbon atom, or a water molecule is only 18/12 or 1.5 times as heavy as a carbon atom.

But now, let us go one step further. Let us express the molecular weight in grams. If we have 12 grams of carbon, it has been found that 6.022×10^{23} carbon atoms are in that 12 grams. If we have 18 grams of water, we still have 6.022×10^{23} or Avogadro's number of molecules. Since the water molecule is 1.5 times as heavy as the carbon atom, the number of molecules needed to make up 18 grams of water should be the same as the number of atoms needed to make up 12 grams of carbon. In fact, for any molecule, if you write its molecular weight in grams, an Avogadro's number worth of molecules will be in that number of grams. This number of grams is known as the **gram-molecular weight**[1] or one **mole**[1]. In other words, one mole of a substance is the mass of the substance that contains Avogadro's number of molecules and which is equivalent to its molecular weight expressed in grams.

The symbol used in chemistry and in source test calculations for the number of moles of a gas is n. To find the number of moles in a given quantity of material, one divides by the gram-molecular weight:

(Eq. 2-2) $$n = (grams\, of\ material)/MW$$

Where: MW = molecular weight expressed as g/g-mole

The number of moles can also be calculated using English units as follows:

(Eq. 2-3) $$n = (pounds\, of\ material)/M$$

Where: M = molecular weight expressed as lb/lb-mole

In stack sampling, most gases tested are a mixture of a number of gases. But if you have such a mixture of different gases, each with its own molecular weight, what value of the molecular weight do you use in the Ideal Gas Law calculations? For such calculations, we use the apparent molecular weight of the mixture, M_{mix}:

(Eq. 2-4) $$M_{mix} = B_1M_1 + B_2M_2 + B_3M_3 + \ldots = \sum B_iM_i$$

Where: M_{mix} = the apparent molecular weight of the gas mixture
B_i = the mole fraction of proportion by volume of the ith gas component
M_i = the molecular weight of the ith gas component

Now, let us return to our balloon. We understand almost intuitively that the more air we blow into the balloon, the larger its volume will be. Let us say that we are filling a balloon with nitrogen. If we put in two moles of nitrogen, the volume will be twice as large than if we put in only one mole of nitrogen. If we put in one mole of oxygen and one mole of nitrogen, the volume will be again twice that of one mole of nitrogen. If we put in one mole of nitrogen, one mole of oxygen, and one mole of water vapor, the volume is three times larger. We can keep going on with this. However, if we put the balloon into a freezer and change the water vapor to ice, the water is no longer a gas and the volume will be approximately two-thirds of what it was before.

This can be expressed mathematically as Avogadro's law:

(Eq. 2-5) $$V = (\text{constant})n$$

Where: V = the molecular volume of the gas mixture
n = number of moles

Something similar happens in an EPA Method 5 sampling train. In source testing, we extract a sample and cool it down in an ice bath before we measure the volume of gas collected. The ice bath reduces the number of moles of gas in the sample (we condensed the water), giving us a *dry* gas instead of a *wet* gas. The volume, of course, becomes correspondingly smaller.

TEMPERATURE[2]

In addition to the composition effects discussed previously, temperature has another effect on the volume of our balloon. If the temperature increases, the volume increases. If the temperature decreases, the volume decreases. It has been found that for each 1°C increase in temperature, the gas volume will increase by a factor of 1/273.15 (or 0.366%), or, upon cooling, the gas volume will decrease by a factor of 1/273.15.
Note: In English units, the volume change for each °F is 1/491.67.

We must be careful here, however, since from 0°C, we can't decrease the temperature by more than 273.15°C or we would get a negative volume. This, of course, defines absolute zero, the limit to which an ideal gas can be cooled. In scientific and engineering calculations, temperature is frequently expressed on the **absolute temperature scale** in terms of degrees **Kelvin** (International System or SI units) or degrees **Rankine** (English units). The conversion between the centigrade scale and the Kelvin scale is as follows:

(Eq. 2-6) $$^{\circ}K = 273.15 + {}^{\circ}C$$

The conversion between the Fahrenheit scale and the Rankine scale is as follows:

(Eq. 2-7) $$^{\circ}R = 459.67 + {}^{\circ}F$$

In the United States, the Rankine scale is generally used in source sampling calculations (http://chemfinder.camsoft.com). In this manual and in the EPA methods of 40 CFR Part 60, the uppercase symbol T is used to denote an absolute temperature, and the lower case 't' is used to

denote degrees Fahrenheit or degrees centigrade. The conversion formulas between the centigrade and Fahrenheit scales are as follows:

(Eq. 2-8) $$^{\circ}F = 1.8\,^{\circ}C + 32$$

(Eq. 2-9) $$^{\circ}C = \frac{5}{9}\left(^{\circ}F - 32\right)$$

This discussion leads of course to the fact that gas volume changes linearly with respect to the absolute temperature, T (Figure 2-2).

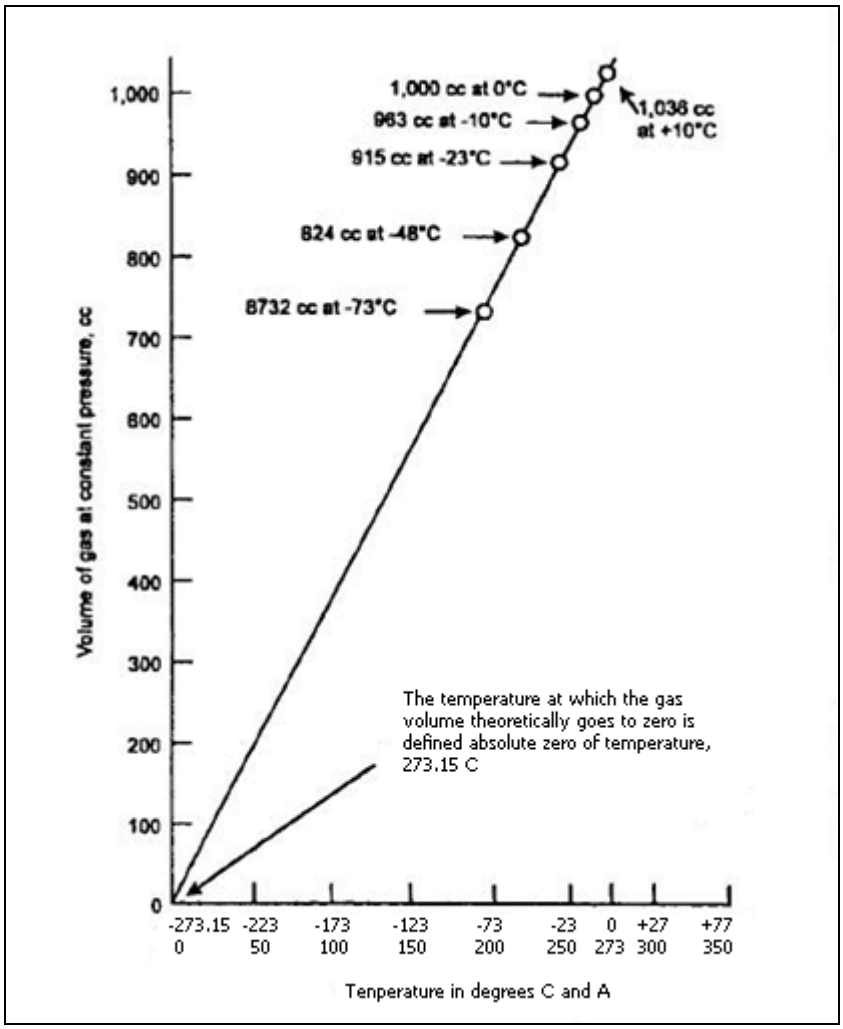

Figure 2-2. Volume of a gas as a function of absolute temperature.

This can be expressed mathematically as:

(Eq. 2-10) $$V = (\text{constant}) \times T$$

If we know the volume of a given amount of gas at one temperature, the volume can be determined at another temperature by the following expression:

(Eq. 2-11) $$\frac{V_1}{T_1} = \frac{V_2}{T_2}$$

or

(Eq. 2-12) $$V_2 = \frac{T_2}{T_1} V_1$$

Where the subscript "1" refers to the original conditions and the subscript "2" refers to the new conditions. Variations of Eq. 2-10 are used frequently in source test calculations.

PRESSURE

Gaseous atoms and molecules are continuously moving in space. They move in a random motion, colliding with one another or with the walls of any confining container. The velocity of the molecules or atoms is dependent on their temperature. At very low temperatures, they move slowly; at higher temperatures, they move more rapidly.

If we confine a large number of molecules in a container such as our balloon, they will exert a force on the balloon wall. The molecules are moving randomly, but a certain percentage will hit the wall at any given time. The gas pressure on the wall is then the force exerted by the gaseous atoms or molecules, measured per unit area of the wall surface. This force per unit area can be expressed in units of lb/in.^{2} (psi) or in the metric units of Newtons/m^2 (pascals).

But here, we must first consider the pressure of the atmosphere and its effect on the measurements that we make in source testing. An ocean of air exists above us, extending from the troposphere past the stratosphere. The air exerts a pressure on us and our test apparatus, just as water in the ocean exerts a pressure on the diver. The deeper the diver goes, the greater the pressure.

It has been found that at sea level, the pressure of the air, the gas molecules bombarding us and our test apparatus are 14.7 lb/in.^{2}. Looking at this in another way, if we seal off a glass tube, fill it with mercury and then invert it in a pool of mercury (Figure 2-3), the column of mercury will fall until its upper end is exactly (76 cm) 760 mm (under standard conditions) above the mercury pool.

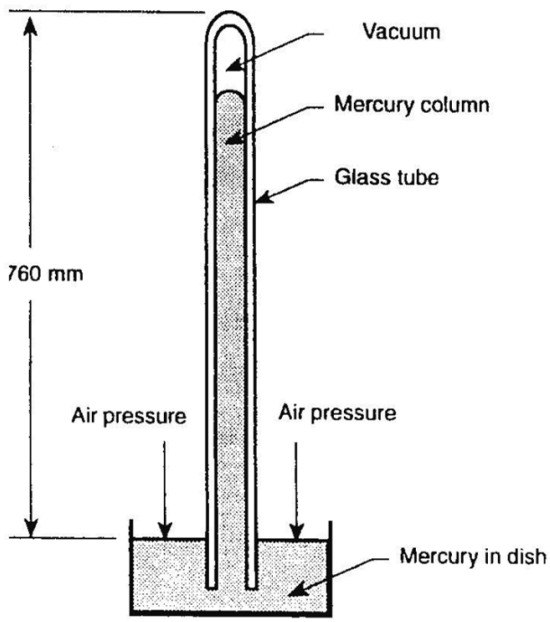

Figure 2-3. A mercury column supported by normal atmospheric pressure.

Here the pressure of the atmosphere is forcing the column of mercury up into the tube. One can say that the force exerted by a 76 cm column of mercury is equal to the pressure of the atmosphere. Mercury columns such as this are called **barometers** and are commonly used to measure atmospheric pressure.

One atmosphere of pressure[1] is therefore defined as the force exerted by a 760 mm column of mercury on an area of 1 cm^2 at 15°C at sea level and at 45° north latitude. In English units, it is equivalent to a pressure of 14.696 lb-force per $in.^2$ exerted at the base of a column of mercury 29.92 in. high.

Note: In terms of SI (International System) units, this value is 101,325 pascals (Pa), where the pascal is the force of 100,000 dynes acting on a surface area of one square meter. One should note also that on weather maps, pressure is frequently expressed in terms of **millibars**, where a **bar** is a force acting on a surface area of 1 cm^2. Therefore, the standard atmospheric pressure in millibars is 1013.25.

Of course, local atmospheric pressure depends on altitude and weather variations. When an accurate mercury barometer is not available during a source test, one way of obtaining the atmospheric pressure is to call up the local airport weather service. If the number reported to you is a barometric pressure corrected to sea-level, the value must be corrected back to correspond to the altitude at the test location. The correction factor is -0.06 in. for every 50 ft of altitude (height) from the sea level value.

We have just discussed standard atmospheric pressure, but we know that the atmospheric pressure changes. The heating and cooling of the atmosphere contributes to changes in air density and the daily highs and lows of regional and local air pressures. In stacks and ducts, pressures also

change. Due to the movement of air through constrictions, or sudden expansions, the gas pressure in a flue can vary (Figure 2-4).

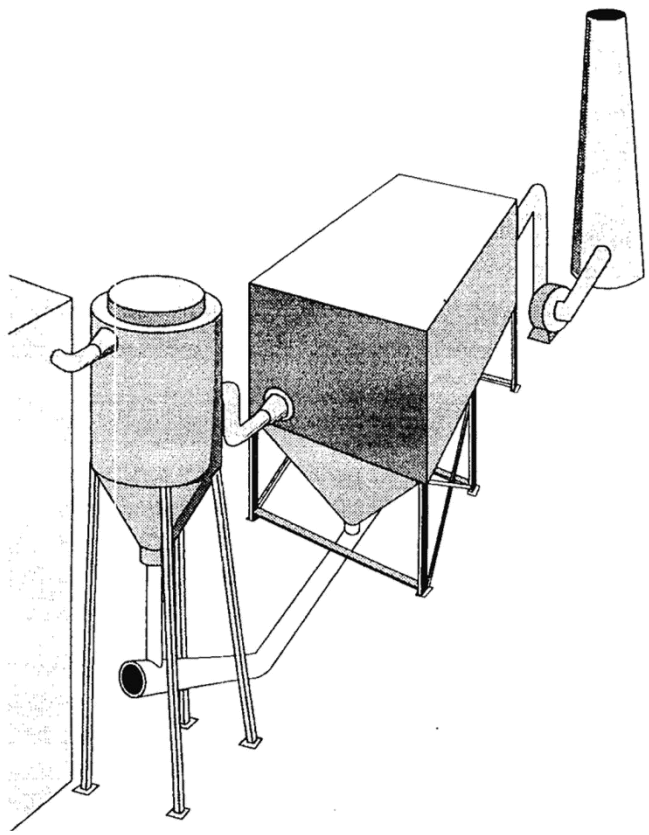

Figure 2-4. Variation of stack static pressure in a duct.

Stack testers understand this all too well. If you open a port and stack gas blows into your face (with all of its constituents, such as acid gas and fly ash), you know that the stack pressure is positive. If the rags you use to stop up the port keep getting sucked into the flue, you know that the pressure is negative. This pressure is known as the **stack static pressure** and is given the symbol, p_s. We will discuss the methods used to measure this pressure later, but most of the methods use some type of manometer or gauge that expresses the pressure value in inches of water.

Most source test calculations, however, require that the pressure values used are absolute pressures. The gauge pressure may be either positive or negative with respect to the prevailing atmospheric barometric pressure. Therefore, the actual pressure of the gas molecules acting against our wall or the surface of our balloon can be expressed as:

(Eq. 2-13) $$P_S = P_b \pm p_S / 13.6$$

Where: P_S = the absolute stack pressure in in. Hg
P_b = the barometric pressure in in. Hg
p_S = a conversion factor (13.6 in. H_2O = 1 in. Hg)

This discussion of pressure may seem like a digression, but the use of absolute pressures in our calculations is just as important as using absolute temperatures. So let us continue further with our description of the effects of pressure on a volume of gas.

One can perform a simple experiment with our balloon. We could blow the balloon up and seal it in Miami and then fly to Denver or to Death Valley, California to see what happens. We would expect that the balloon would expand in Denver, since at the higher altitude; the atmospheric pressure is less than in Miami, where the balloon was blown up. Alternatively, in Death Valley, which is below sea level, the volume of the balloon would decrease, due to the higher pressure at that location.

With similar experiments and reasoning, Robert Boyle stated in 1660 that "The volume of a fixed mass of gas at constant temperature is inversely proportional to the pressure." Boyle's law can be written as follows:

(Eq. 2-14) $$V = (\text{constant}) / P$$

Where: P = the absolute pressure

Now, if we know the volume of a given amount of gas at one pressure, the volume can be determined at another pressure by the expression:

(Eq. 2-15) $$\frac{P_1}{P_2} = \frac{V_2}{V_1}$$

or

(Eq. 2-16) $$V_2 = \frac{P_1}{P_2} V_1$$

Where the subscript 1 refers to the original conditions and the subscript 2 refers to the new conditions. Variations of Eq. 2-14 are used frequently in source test calculations.

THE IDEAL GAS LAW[1]

Charles' law states that, when the volume is held constant, the absolute pressure of a given mass varies directly as the absolute temperature; whereas Boyle's law states that, when the temperature is held constant, the volume varies inversely as the absolute pressure. These two concepts can be combined into an expression known as the **ideal gas law**.

(Eq. 2-17) $$PV = \frac{m}{M} RT \quad \text{or} \quad PV = nRT$$

Where:
- P = absolute pressure
- V = volume of gas
- m = mass of gas
- M = molecular weight of a gas

n= number of moles of gas
T = absolute temperature
R = universal gas constant

The unit of R depends upon the units of measurement used in the equation. Some useful values are:

(1) $$R = 1545 \frac{(lb)(ft)}{(lb-mol)(^{\circ}R)}$$

(2) $$R = 21.85 \frac{(in.Hg)(ft^3)}{(lb-mol)(^{\circ}R)}$$

(3) $$R = 555.0 \frac{(mm\,Hg)(ft^3)}{(lb-mol)(^{\circ}R)}$$

(4) $$R = 82.06 \frac{(cm^3)(atm)}{(gm-mol)(^{\circ}K)}$$

In the above units of R:

V = ft^3, cm^3 for (4)
m = lb, g for (4)
M = lb/lb-mole, g/g-mole for (4)
T = °R, °K for (4)
P = lb/ft^2 for (1)
= in. Hg for (2)
= mmHg for (3)
= atm for (4)

Any value of R can be obtained by utilizing the fact that, with appropriate conversion factors, there are 22.414 L per gm-mole or 359 ft^3 per lb-mole at 32°F and 29.92 in. Hg.

The ideal gas law applies to perfect, ideal gases. The ideal gas consists of "idealized" molecules that (1) are imagined as points in space (have no volume) but do have mass and velocity, (2) do not attract or repel each other, and (3) do not lose energy when they collide with each other or the walls of a container. The ideal gas law works quite well at the conditions of pressure and temperature encountered in stack testing. Of course, as the gas density increases and real molecules come closer together, the law begins to break down and corrections have to be applied. Such corrections are normally not necessary in stack test calculations.

This expression gives all the necessary information for calculations involving volume, pressure, temperature and the number of molecules of gas. It eliminates the need for dealing with the individual expressions such as Boyle's law and Charles' law. The ideal gas law is expressed in terms of four variables: P, V, T, and n. It can be used in all types of calculations to tell us how one variable will be affected as the others change.

Several useful expressions can be easily derived from Eq. 2-16. One is the temperature/ pressure correction formula routinely used in source sampling:

(Eq. 2-18) $$V_2 = \frac{T_2 P_1}{T_1 P_2} V_1$$

Where again, the subscript 1 refers to the original conditions and the subscript 2 refers to the new conditions.

Another useful relationship relates to gas density. Density is the mass of a substance per unit volume, and for ideal gases, can be expressed as:

(Eq. 2-19) $$\rho = \frac{m}{V}$$

or

(Eq. 2-20) $$\rho = \frac{MP}{RT}$$

CORRECTING TO STANDARD CONDITIONS

The ideal gas law is typically used to correct from stack conditions of pressure and temperature to a set of standard conditions. We can rewrite Eq. 2-18 as:

(Eq. 2-21) $$V_{std} = \frac{T_{std} P_s}{T_s P_{std}} V_s$$

Where the subscript std stands for standard conditions, and the subscript s stands for stack conditions. We will become familiar with the use of this formula in the equations used in the reference methods.

The EPA standard conditions (SC) are:

P_{std} = 29.92 in. Hg (760 mm Hg)

T_{std} = 528°R (293°K)

Note: The "EPA standard conditions" differ from the "standard temperature and pressure" used in chemistry and physics, which define standard temperature as 0°C (32°F). The EPA standard temperature refers to the typical room temperature condition of 20°C (68°F).

GASES IN MOTION

In source testing, much of the work is concerned with flowing gas streams. The source tester must generally calculate the volumetric flow rate of stack gas as well as the flow rate of the gas through the sampling apparatus. Figure 2-5 illustrates a typical flow monitoring situation:

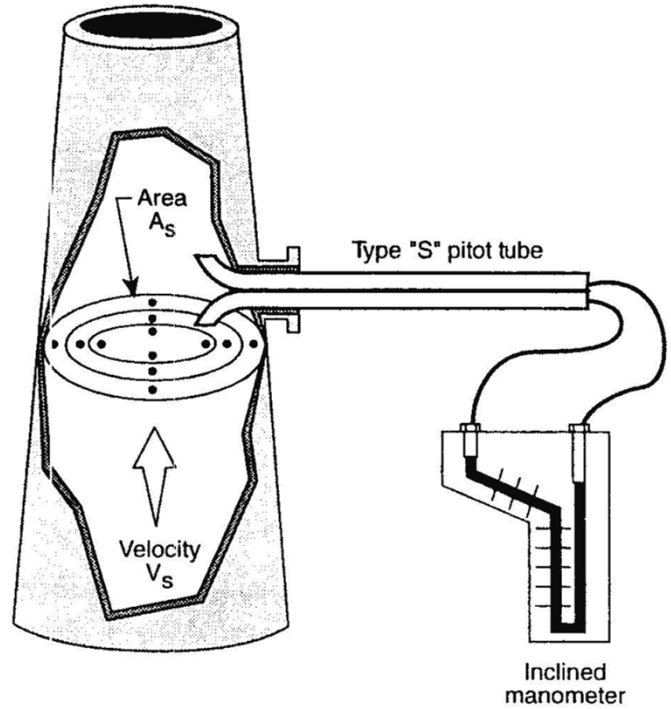

Figure 2-5. Determining the volumetric flow at a stack cross-section.

The volumetric flow rate, in units of cubic feet per hour (ft^3/hr) or cubic meters per hour (m^3/hr) can be determined if we measure the flue gas velocity and the cross-sectional area of the stack or duct at the measurement location. The simplest form of the equation is:

(Eq. 2-22) $$Q_s = v_x A_s$$

Where: Q_s = the stack gas volumetric flow rate in ft^3/hr or m^3/hr
v_x = the flue gas velocity in ft/hr or m/hr
A_s = the cross-sectional area in ft^2 or m^2

If you check this equation dimensionally, you find that:

$$\frac{ft^3}{hr} = \frac{ft}{hr} \times ft^2$$

The volumetric flow rate calculated in this manner would be the flow rate at actual stack conditions. In other words, it gives the flow rate of the stack gas at the stack pressure and temperature. One often uses the abbreviations “acf/hr” or “acfh” to mean actual cubic feet per hour, instead of ft^3/hr in such situations. Most calculations, however, require that this flow rate be corrected to standard conditions. This is done so that data can be comparable between different sources.

Correcting to standard conditions requires the application of the ideal gas law and the correction expression given in Eq. 2-21. Combining Eq. 2-21 and Eq. 2-22, we have:

(Eq. 2-23) $$Q_{std} = \frac{T_{std} P_s}{T_s P_{std}} v_x A_s$$

The abbreviation "scf/hr," standard cubic feet per hour, is commonly used when the flow rate is corrected to standard conditions.

Going one step further, the volumetric flow rate can be calculated as if all the moisture in the gas were removed. This gives *a dry* volumetric flow rate and requires a measurement of the moisture fraction, B_{ws}, of the flue gas. This added correction then gives the following expression:

(Eq. 2-24) $$Q_{std} = (1 - B_{ws}) \frac{T_{std} P_s}{T_s P_{std}} v_x A_s$$

The abbreviation "dscf/hr," for dry standard cubic feet per hour, is then used to express the units of this calculation.

If we can determine the concentration of particulate matter (or other pollutant) in the flue gas, we can obtain the rate of emission of the particulate matter into the atmosphere in term of mass per unit time. This rate is called the **pollutant mass rate**, pmr_s, and can be expressed in units of lb/hr, ton/yr, or kg/hr, depending upon which conversion factors you wish to use.

The pollutant mass rate is obtained from the volumetric flow rate and the concentration by the simple expression:

(Eq. 2-25) $$pmr_s = c_s Q_s$$

Where: pmr_s= the pollutant mass rate in lb/hr, ton/yr, kg/hr
c_s = the pollutant concentration in lb/ft^3, kg/m^3
Q_s = the volumetric flow rate in ft^3/hr or m^3/hr the cross-sectional area in ft^2 or m^2

One can also check this expression dimensionally to see that it makes sense.

BERNOULLI'S PRINCIPLE

Daniel Bernoulli was a Swiss scientist who, in the 1800s, studied the relationships between pressure and fluid velocity. His work led to a relationship called **Bernoulli's principle[1],** which is stated as follows:

The pressure in a fluid decreases with increased velocity of the fluid.

This remarkably simple statement explains many types of physical phenomena: why airplanes fly, why flags flap, why baseballs curve, and so on. In a practical sense for source testing, Bernoulli's principle provides the basis for developing flow rate measuring devices such as the pitot tube and the orifice meter.

When a fluid is moving, energy is contained in the fluid in different forms. Some of that energy is

associated with the internal pressure of the fluid and some is associated with the flow of the fluid, or its kinetic energy. If a liquid or gas is flowing through a tube which suddenly becomes constricted, (Figure 2-6), what happens?

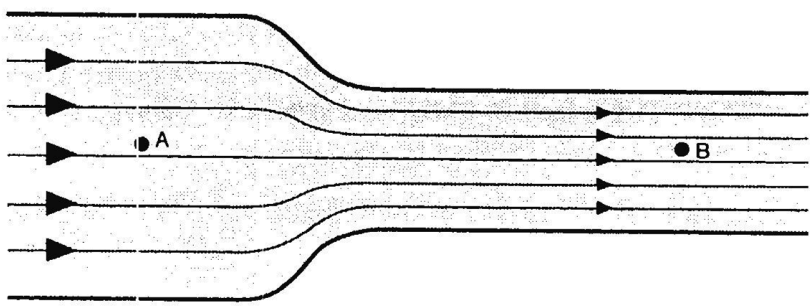

Figure 2-6. Fluid flow through a constricted tube.

In Figure 2-6, streamlines are used to represent smooth paths of flow. The closer they are bunched together, the higher the fluid speed.

If we think of our everyday experience, we realize that the fluid must speed up as it flows through the narrow part of the tube. For example, the flow of water in a brook will increase as the banks of the brook narrow. This principle can also be demonstrated with a garden hose. As we decrease the nozzle size of a hose, we are able to direct water farther into the garden.

For the water to move faster through the narrows of the brook, it must obtain energy from somewhere. This increase in kinetic energy comes from the internal pressure of the fluid. Note from Figure 2-6 that the pressure at point A must be higher than at B; otherwise the fluid would not be flowing through the constriction. If the pressure is less at point B than at point A, we should be able to measure the difference. Let us modify our tube of Figure 2-6 by installing vertical pressure taps on the tube as shown in Figure 2-7.

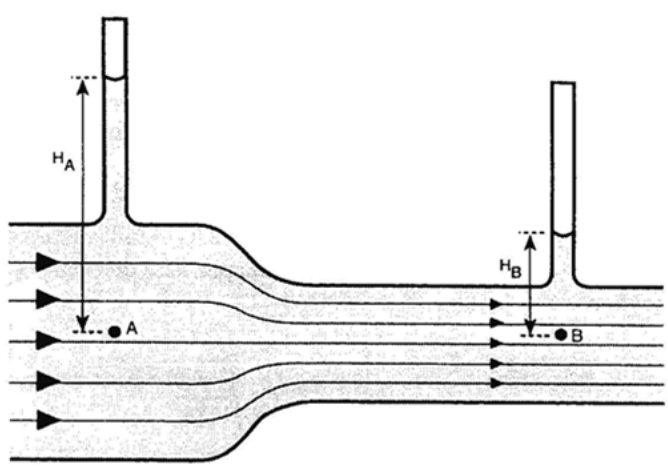

Figure 2-7. Monitoring the pressure on a constricted flow tube.

The total energy at point A (the internal, potential energy plus the kinetic energy) is equivalent to

the total energy at point B. At point B, the internal energy is less and therefore the pressure is lower.

The pressure has decreased in the constriction as seen from the decreased height of the fluid in the pressure tap. Here, the flow rate of the fluid has increased at the expense of the internal pressure. The molecules are moving forward, rather than bouncing off the walls.

The pitot tube equation for flue gas velocity in Method 2 and the orifice meter equation used in Method 5 are derived from the Bernoulli principle and Bernoulli's equation, which is the mathematical expression of the principle. Both the pitot tube and orifice meter are simple devices that are used to measure gas flow. They are illustrated in Figure 2-8.

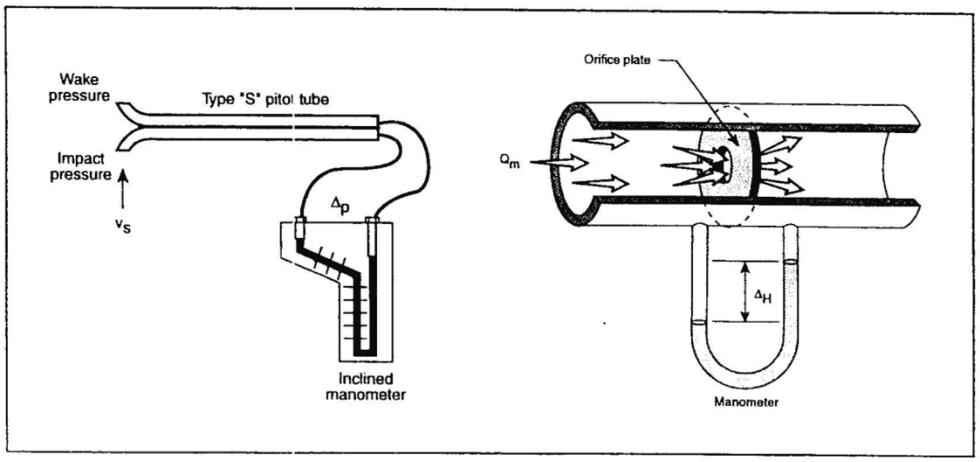

Figure 2-8. The pilot tube (left) and the orifice meter (right).

Note that each device has two pressure taps and measures the difference in pressure between the two, the Δp or ΔH, which is sometimes called the **pressure drop** or **pressure differential**. Because of the form of Bernoulli's equation, the pressure drop enters into flow calculations under a square root:

(Eq. 2-26) $$v_s = K_p C_p \left(\sqrt{\Delta p}\right) avg \sqrt{\frac{T_s(abs)}{P_s M_s}}$$

(Eq. 2-27) $$Q_m = K_m \sqrt{\frac{T_m \Delta H}{P_s M_s}}$$

Where: v_s = flue gas velocity (m/sec, ft/sec)
K_p = units factor

$$34.97\, m/\sec \left(\frac{\left(\frac{g}{g-mol}\right)(mm\,Hg)}{(^{\circ}K)(mm\,H_2O)} \right)^{\frac{1}{2}}$$

or

$$85.49\, ft/\sec \left(\frac{\left(\frac{lb}{lb-mol}\right)(in.Hg)}{(^{\circ}R)(in.H_2O)} \right)^{\frac{1}{2}}$$

Where: T_s = stack temperature (°K or °R)
Δp = velocity head of the stack gas (pressure drop)(mm H_2O or in. H_2O)
P_s = absolute stack pressure (mmHg, in. Hg)
M_s = stack gas molecular weight (g/g-mole, lb/lb-mole)

Note: The derivation of these equations are given in Appendix C.

For the orifice meter equation:
Q_m = volumetric flow rate through orifice meter (m^3/sec, ft^3/sec)
K_m = orifice meter calibration factor (determined in lab)
T_m = absolute dry gas meter temperature (°K, °R)
OH = pressure differential across orifice (mm H_2O, in. H_2O)
P_m = absolute meter pressure (mm Hg, in. Hg)
M_m = molecular weight of gas passing through meter (g/g-mole, lb/lb-mole)

Note that the equations are very similar. You may have seen other expressions of these equations in terms of gas density instead of pressure, temperature, and molecular weight. Conversions can easily be made. However, the preceding equations are used in source testing; and the reference methods and will be referred to throughout this manual.

THE POLLUTANT MASS RATE REVISITED

This manual has been developed to describe the procedures used to sample for particulate matter in flue gases. The reference method for particulate matter, Method 5, is actually a combination of several different techniques. As we have seen in Eq. 2-25, to obtain the pollutant mass rate, one must obtain two measurements: the particulate mass concentration and the gas volumetric flow rate. The pollutant mass rate equation can be combined with the pitot tube equation to obtain the **wet-basis** expression for the flue gas volumetric flow rate in lb/hr or kg/hr.

(Eq. 2-28) $$pmr_s = 3{,}600\, c_s A_s K_p C_p \left(\sqrt{\Delta p}\right) \sqrt{\frac{T_s}{P_s M_s}}$$

The pollutant mass rate is the end result that we seek in source testing. We might wish to express

our emissions in other units, such as ng/joule or lb/mm BTU, and suitable calculations will be given for doing such conversions. But the goal here is to describe how to obtain these values so that they can be used for either source operations or regulatory purposes.

2.3 SUMMARY

THE PROPERTIES OF GASES

This chapter covered the following topics:

- Gas stream sampling.
- Constant Sampling Rate, Proportional Sampling Rate, and Isokinetic Sampling Rate.
- Gas temperature and pressure.
- The Ideal Gas Law.

BIBLIOGRAPHY

Aldina, G.J., and J.A. Jahnke. 1979. *Source Sampling for Particulate Pollutants.* (APTI Course 450 Student Manual). EPA 450/2-79-006. U.S. Environmental Protection Agency.

Brescia, F., J. Arents, H. Meislich, and A. Turk. 1980. *Fundamentals of Chemistry.* New York: Academic Press.

Hewitt, P.G. 1971. *Conceptual Physics: A New Introduction to Your Environment.* New York: Little, Brown.

Hiller, L.A. and R.H. Herber. 1960. *Principles of Chemistry.* New York: McGraw-Hill.

Long, D. 1980. *The Physics Around You.* Belmont, CA: Wadsworth Publishing.

Office of the Federal Register National Archives and Records Administration. 1992. Standards of performance for new stationary sources. *Code of Federal Regulations,* Title 40 (Protection of Environment), Part 60, Appendix A.

CHAPTER 3

3.0 THE METHOD 5 SAMPLING TRAIN

3.1 OVERVIEW

PURPOSE

The purpose of this chapter is to introduce the history, characteristics, and theory behind the Federal Reference Method (FRM) 5 sampling techniques. The laws and regulations that prescribe Method 5 are identified and the evolution of Method 5 over the last sixty years is discussed. This chapter also discusses the characteristics of isokinetic sampling and how to complete an isokinetic rate equation. Once you know how to complete an isokinetic rate equation and recognize pressure changes, you will be ready to understand how to operate a sampling train. The design and equipment components of an isokinetic sampling train are explained in detail.

LEARNING OBJECTIVES

At the conclusion of this training, students will be able to:

- Identify the methods and equipment used in Method 5 sampling.
- Identify the basic considerations of isokinetic sampling.
- Correctly complete an isokinetic rate equation.
- Operate a sampling train.
- List the components of a sampling train.

3.2 EPA METHOD 5 DESCRIPTION AND THEORY

OVERVIEW

We have seen in Chapter 1 that particulate emission standards have been established for many stationary sources. The most common method used to determine whether a source is in compliance with these standards is EPA's Method 5, *Determination of Particulate Emissions from Stationary Sources*, found in the U.S. Code of Federal Regulations (40 CFR Part 60, Appendix A). The sampling techniques used in Method 5 were developed over a period of time since the 1950s and have been widely used both in North America and in Europe. Method 5 requires both technical knowledge and common sense to be conducted properly, but the procedures are straightforward and give reliable data regarding flue gas particulate emissions.

Method 5 was promulgated in the Federal Register on December 21, 1971 (326FR24876) as part of performance testing, stack gas monitoring, recordkeeping and reporting requirements

for five (5) source categories as part of the EPA's emerging New Source Performance Standard Program (NSPS). The NSPS program was authorized by Congress in the Clean Air Act of 1970, and codified in Section 111 of the Act. The NSPS program focused on "new" sources rather than existing sources of pollutants. Congress believed that NSPS would prevent new air pollution problems in the short term and result in long-term improvements in air quality as existing plants were replaced with new ones. The first five (5) source categories which were initially addressed under the new NSPS program were:

- Subpart D: Fossil Fuel Fired Steam Generators (Construction After August 17, 1971);
- Subpart E: Incinerators;
- Subpart F: Portland Cement Plants;
- Subpart G: Nitric Acid Plants; and
- Subpart H: Sulfuric Acid Plants.

The standard development process for regulated source categories under EPA's NSPS program addresses four (4) fundamental elements of Section 111 of the Act. These are concepts of new sources, best demonstrated control technology, numerical emission limits, and performance emission testing utilizing standardized stack testing methodology. Consequently, early on in the development of the NSPS program, the EPA promulgated the first series of methods to support the verification that "emission limits were not being violated." Thus, regulated sources had to perform "emission testing" and those results were to be reported to the EPA by the regulated source. Performance test methods promulgated in support of the first five source categories regulated under the NSPS program were Methods 1 through 8. As identified in Table 1-3, Methods 1 through 4 supports the application of Method 5 to a source category which has particulate matter emission limits, as discussed in Chapter 1.

Under the early NSPS program, definition of particulate matter was defined by Method 5 as "filterable particulate matter at the specified temperature (i.e., 248°F ± 25°F) of the filter compartment." However, as the EPA began to study more closely sources emitting particulate matter, they realized that particulate matter was comprised not only particles, but also of condensibles that pass through the filter media and condense (i.e., becomes particles) downstream of the filter holder. As will be discussed in Chapter 8, these condensibles are sometimes counted as part of the particle catch. Thus, we see that not only the operating temperature of the filter but also adding condensibles to the particulate matter catch redefines "particulate matter" differently from its initial definition.

Method 5 will not quantify particulate matter that results when stack gases cool to ambient conditions after existing the stack. However, Method 202 can be used to quantify particulate matter that will condense at ambient conditions. Method 202 must be used in conjunction with Method 201A if the gas filtration temperature exceeds 30°C (85°F) and measurement of both the filterable and condensable (material that condenses after passing through a filter) components of total primary (direct) PM emissions to the atmosphere is required.

In order to address the various sources with their different chemistries, the EPA promulgated other methods in redefining particulate matter for specific source categories. As listed in Table 3-1, the definition of particulate matter is based upon the operating temperature of the filter, the type of solvents used in sample recovery, and the position of the filter in the specified sampling train.

Table 3-1. Promulgated versions of Method 5 listed in 40 CFR Part 60, Appendix A.

Year of Promulgation	Method Number	Title	Location of Filter and Operating Temperature
1970	5	Determination of Particulate Matter Emissions From Stationary Sources	Filter Box @ 248 ^{o}F ± 25 ^{o}F
1982	5A	Determination of Particulate Matter emissions from the Asphalt Processing and Asphalt Roofing Industry	Filter Box @ 108 ^{o}F ± 18 ^{o}F
1986	5B	Determination of Nonsulfuric Acid Particulate Matter Emissions from Stationary Sources	Filter Box @ 320 ^{o}F ± 25 ^{o}F
1984	5D	Determination of Particulate Matter Emissions from Positive Pressure Fabric Filters	Filter Box @ 248 ^{o}F ± 25 ^{o}F
1985	5E	Determination of Particulate Matter Emissions From the Wool Fiberglass Insulation Manufacturing Industry	Filter Box @ 248 ^{o}F ± 25 ^{o}F plus condensed PM collected in Impinger solutions as Total Organic Carbon [TOC] using a nondispersive infrared type of analyzer
1986	5F	Determination of Nonsulfate Particulate Matter Emissions From Stationary Sources	Filter Box @ 320 ^{o}F ± 25 ^{o}F With Ammonium Sulfate subtracted from the total particulate weight; the result is reported as nonsulfate particulate matter
1988	5G	Determination of Particulate Matter Emissions From Wood Heaters (Dilution Tunnel Sampling Location)	Particulate matter in wood heater exhaust which is combined with dilution air is collected on two glass fiber filters @ No Greater Than 90 ^{o}F
1988	5H	Determination of Particulate Matter Emissions From Wood Heaters From a Stack Location	1st Filter Box @ 248 ^{o}F, followed by impinger system cooled such that temperature exiting 2nd filter is no greater than 68 ^{o}F
1999	5I	Determination of Low Level Particulate Matter Emissions From Stationary Sources	Filter Box (47-mm Glass Fiber Filter) @ 248 ^{o}F ± 25 ^{o}F

No matter which method is used for quantifying particulate matter from industrial sources, methods 5 through 5I (except Method 5G which requires proportional sampling) require sampling isokinetically in order to extract a representative sample of particulate matter from the source. Additional information on these methods can be found at http://www.epa.gov/ttn/emc/.

3.3 ISOKINETIC SAMPLING

THE ISOKINETIC SAMPLING TECHNIQUE

Method 5 requires that a special type of sampling technique called **isokinetic sampling** be performed when sampling for particulate matter. Rather than just inserting a probe into a stack and pulling out a sample at some arbitrary flow rate, isokinetic sampling requires that the sample be drawn into the probe nozzle at the same rate as it is moving in the flue gas (Figure 3-1).

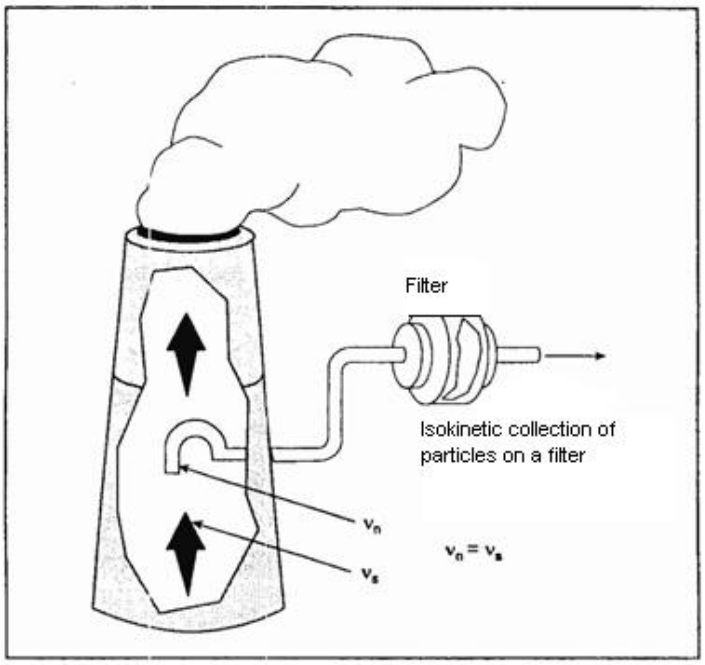

Figure 3-1. Isokinetic sampling.

When you break apart the word "isokinetic," you have "iso," which means "the same as," and "kinetic," which pertains to motion. Isokinetic sampling therefore means that you are sampling the gas at the same rate it is moving through a stack or duct. In terms of the variables we use in source test calculations, the isokinetic requirement is:

(Eq. 3-1) $v_n = v_s$

Where: V_n = velocity of gas at the sample probe inlet (ft/s or m/s)
V_s = velocity of stack gas (ft/s or m/s)

In order to collect a representative sample of particulate matter, isokinetic sampling is necessary because of the way particles behave in a gas stream. Particles will normally follow gas streamlines as they move through the plant ductwork or stack. However, if the gas stream makes a sudden turn, or a disturbance modifies the streamlines, the particles may not be able to follow in the same direction as the gas (Figure 3-2).

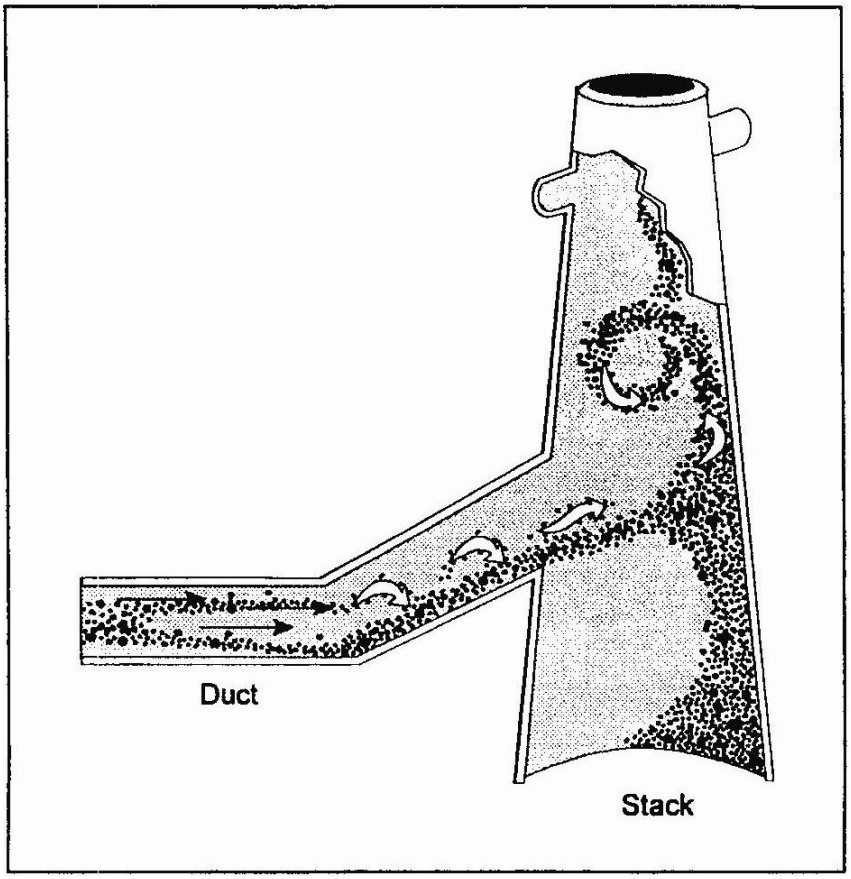

Figure 3-2. Particles in a gas stream.

The inertia of large particles will cause them to continue to move in their initial direction even when the streamline is changing, which may in turn result in their colliding with the walls of the duct or otherwise penetrating through the streamlines.

Particle sizes vary in emission sources, as we have seen in Chapter 1, but generally there will be a distribution of sizes in the flue gas stream. In most flue gas situations, one may generalize that large particles are those that are greater than 5 µm in diameter and small particles are those less than 1 µm in diameter. The inertia, or momentum, of a particle will, of course, depend upon its density. Particles between 1 and 5 µm are in a somewhat intermediate range-their behavior in streamlines being more dependent on their density and the gas velocity.

In isokinetic sampling, a sample is taken that does not distort the streamlines. If the sample is isokinetic, the distribution of particles sizes (from small to large) entering the probe will be exactly the same as that in the flue gas itself. In other words, the particulate sample will be representative of the flue gas particle size distribution. This is the ultimate goal of isokinetic sampling-to obtain a representative sample (Figure 3-3).

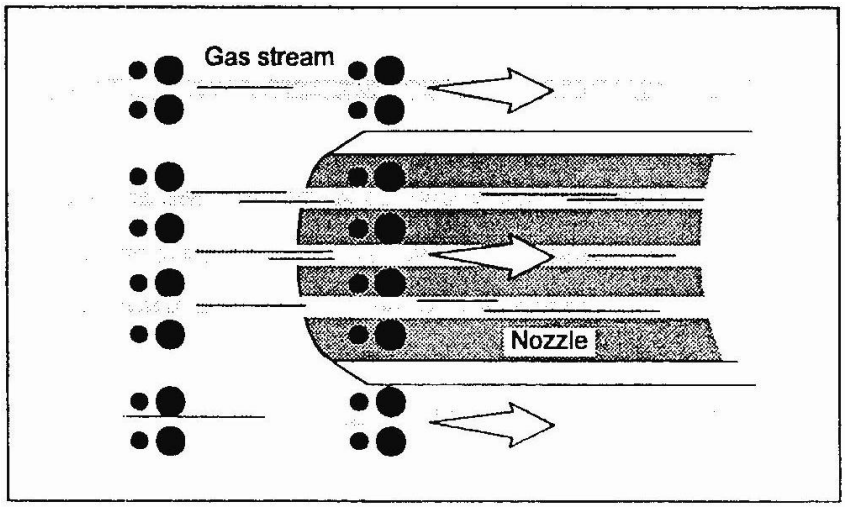

Figure 3-3. Isokinetic sampling conditions.

However, if the sample velocity, v_n, is too low or too high with respect to the stack gas velocity, v_s, the sampling is said to be **anisokinetic** and errors may result in the particulate concentration measurements. To see the effect of anisokinetic sampling, refer to Figure 3-4.

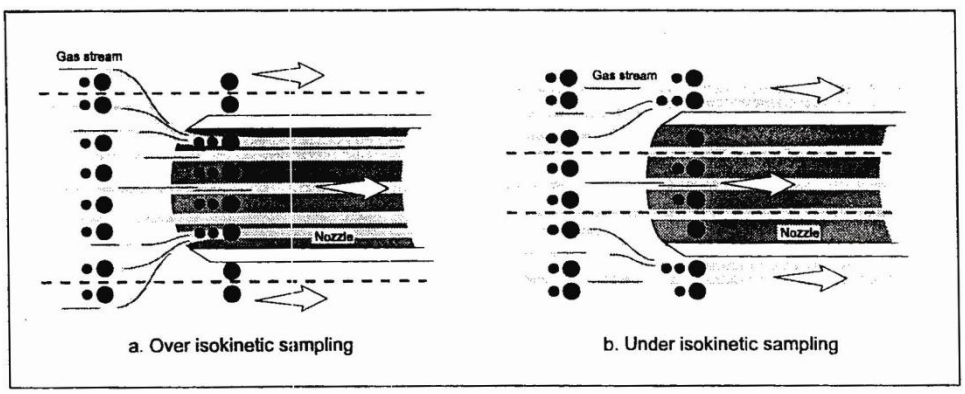

Figure 3-4. Anisokinetic sampling conditions.

When the sampling is not isokinetic, problems develop in the region of the curved streamlines near the nozzle inlet. When the nozzle inlet velocity is greater than the stack gas velocity (Figure 3-4a), the nozzle brings in gas from regions not directly in front of it. Gas streamlines converge at the nozzle inlet to brings in a volume of gas greater than one would obtain under isokinetic conditions. Here, the large particles, because of their inertia, do not follow the streamlines, but break through them to continue in the same direction. An analogy here might be the failure of a semi-trailer truck to make a curve, heading off into a farmer's field. When large particles fail to follow gas streamlines, a representative number of large particles will not be included with the greater volume of gas sampled. The particulate distribution in the sample will not be representative and the particle concentration of the sample will be *low*.

When the nozzle inlet velocity is less than the stack gas velocity (Figure 3-4b), the nozzle is bringing the gas in at too low a rate. The gas streamlines bunch up at the nozzle inlet, almost as if it were an obstruction. Here, we are sampling at a rate lower than the flue gas velocity, so we

are bringing in a smaller volume of gas than if we were to sample isokinetically. However, the large particles in the gas stream that should slip pass the nozzle instead punch through the streamlines into the nozzle inlet due to their inertia. We now have too many large particles for the smaller volume of gas collected, and our particulate concentration is too high.

In these two situations, small particles followed the streamlines and an appropriate number of small particles would be collected. In fact, if we could be assured that we had only small particles and that they followed streamlines, we wouldn't have to sample isokinetically. However, in most sampling situations, we have a distribution of sizes-from small to intermediate to large-and we must sample isokinetically to obtain a representative distribution of the particles in the sample.

One other problem may arise in sampling. Although we may be sampling isokinetically, the nozzle may be misaligned (Figure 3-5).

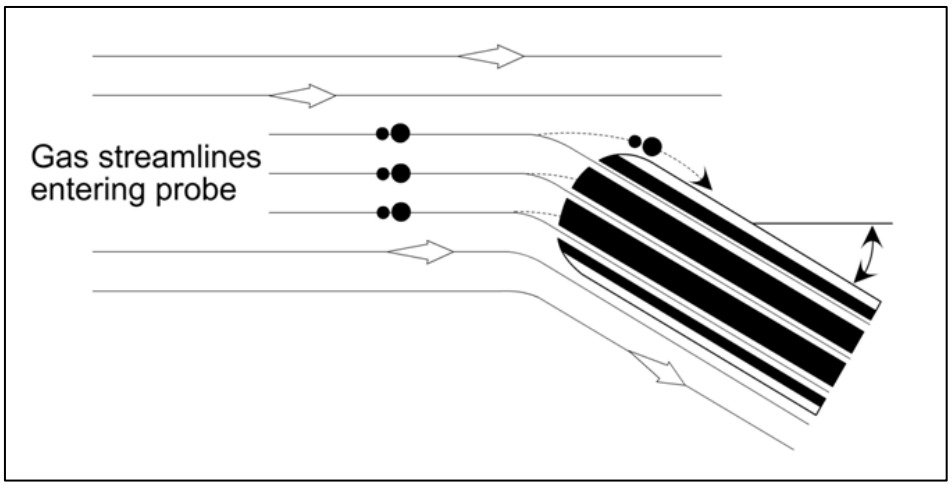

Figure 3-5. Nozzle misalignment.

Here, the streamlines bend into the nozzle inlet, but the large particles are not able to make the turn. These large particles will therefore not be included in the sample and the resultant particulate concentration will be too low.

THE ISOKINETIC RATE EQUATION

We are now going to derive the isokinetic rate equation. Since this derivation is central to an understanding of the operation of the Method 5 sampling train, it is important to review the derivation. The derivation includes mathematical techniques which are simple algebra and are basically a matter of multiplying and dividing a number of symbols.

The isokinetic rate equation relates the measured value of the pressure drop, Δp, across the pitot tube to the pressure drop, ΔH, across the orifice meter, which we need to know if we are to sample isokinetically. The form of the isokinetic rate equation is simple, and is:

(Eq. 3-2) $$\Delta H = k\Delta p$$

Where: k = an assemblage of constants and parameters that we obtain in our calibration procedures and source test pre-survey or otherwise assume
ΔH = Average pressure differential across the orifice meter (mm H_2O or in H_2O)
Δp = Average pressure differential across the pitot tube (mm H_2O or in H_2O)

To obtain an expression for "k", we first consider the conditions necessary for isokinetic sampling. If we turn on the sampling pump of the Method 5 train, flue gas will be sucked through the nozzle, the filter, and impingers, and then pushed through the dry gas meter and the orifice meter. The suction on the nozzle draws flue gas into the system at a velocity v_n or volumetric flow rate of Q_n as in Eq. 3-3:

(Eq. 3-3) $$Q_n = 60 v_n A_n$$

Where: A_n = Sample nozzle area in ft^2 or m^2
Q_n = Flow rate through the nozzle (ft^3/min or cfm, m^3/min or cmm)
60 = Conversion from seconds to minutes

To sample isokinetically, somehow we must adjust the suction so that we achieve the isokinetic condition given in Eq. 3-1:Assuming that we have achieved the isokinetic condition, what does this do to the rest of the system? To answer that question, we must start making some substitutions in Eq. 3-3. First if the nozzle velocity is the same as the flue gas velocity, we can replace v_s for v_n in Eq. 3-4:

(Eq. 3-4) $$Q_n = 60 v_s A_n$$

The end of the nozzle should be circular, so we can express the area, A_n as:

(Eq. 3-5) $$A_n = \pi \left(\frac{D_n}{(2)(12)} \right)^2$$

Where: D_n = the diameter of the nozzle, in
12 = Conversion factor from inches to feet

Substituting Eq. 3-5 into Eq. 3-4, we have:

(Eq. 3-6) $$Q_n = 60 v_s \pi \left(\frac{D_n}{(2)(12)} \right)^2$$

We can make one other substitution at this point. In Chapter 2, we were given an expression for the flue gas velocity (the pitot tube equation, Eq. 2-26). Substituting the pitot tube equation into Eq. 3-6, we have:

(Eq. 3-7) $$Q_n = 60 K_p C_p \sqrt{\frac{T_s \Delta p}{P_s M_s}} \pi \left(\frac{D_n}{(2)(12)} \right)^2$$

Where: K_p = Velocity equation constant
C_p = Pitot tube coefficient, dimensionless

T_s = Stack absolute temperature (K, R)
P_s = Stack absolute pressure (mm Hg, in Hg)
M_s = Stack gas molecular weight, wet basis (g/g-mole, lb/lb-mole)

Note that we already have one part of the isokinetic rate equation, Eq. 3-2. The Δp is under the square root sign of Eq. 3-7.

We can obtain the expression for "k" in Eq. 3-2 if we can relate the nozzle volumetric flow rate, Q_n to the orifice meter volumetric flow rate, Q_m. We mentioned earlier that as we pull in sample gas from the duct or stack, we cool it down and drop out the moisture in the impingers in the ice bath. From our discussion of the ideal gas law in Chapter 2, we know that a given volume of gas entering the nozzle is reduced in volume in the impingers, resulting in a smaller volume of gas exiting the train. Let us quantify this effect.

Here, we start backwards, working from the orifice meter to the nozzle. If we know the volumetric flow rate of the gas at the orifice meter (taking into account changes in the temperature and pressure of the gas, and the loss of water molecules), what will be the volumetric flow rate of gas at the nozzle? Or:

(Eq. 3-8) $$Q_n = (\text{corrections for } T, P, \text{moisture}) \times Q_m \backslash$$

Where: Q_m = Flow rate through the meter (ft^3/min or cfm, m^3/min or cmm)

If the temperature and pressure of the gas changes from the orifice meter to the nozzle in the sampling train, we must first make an ideal gas law correction to Q_m. To obtain the nozzle volumetric flow rate from the meter volumetric flow rate, we first correct from meter conditions, m, to stack conditions, s:

(Eq. 3-9) $$Q_n = \frac{P_m T_s}{P_s T_m} Q_m$$

Where: P_m = Absolute meter pressure (mm Hg, in Hg)
P_s = Absolute stack pressure (mm Hg, in Hg)
T_m = Absolute meter temperature (K, R)
T_s = Absolute stack temperature (K, R)

But, if we have moisture in the stack gas, we removed the water molecules in the impingers before they could reach the orifice meter. Therefore, more moles of gas entered the nozzle than left the orifice meter. To obtain the nozzle gas flow rate, we must account for the water vapor entering the nozzle. If B_{ws} is the fraction of water in the flue gas, then we divide Eq. 2-28 by (1 $-B_{ws}$) to correct for the loss of the water in the impingers, or:

(Eq. 3-10) $$Q_n = \frac{1}{1 - B_{ws}} \frac{P_m T_s}{P_s T_m} Q_m$$

Where: B_{ws} = Water vapor in the gas stream (portion by volume)

In Chapter 2, we were given the orifice meter equation (Eq. 2-27):

(Eq. 3-11) $$Q_m = K_m \sqrt{\frac{T_m \Delta H}{P_m M_m}}$$

Where: K_m = orifice meter calibration constant (determined in lab)
M_m = molecular weight of gas passing through meter (g/g-mole, lb/lb-mole)

Substituting this equation into Eq. 3-10, we have:

(Eq. 3-12) $$Q_n = \frac{1}{(1-B_{ws})} \frac{P_m T_s}{P_s T_m} K_m \sqrt{\frac{T_m \Delta H}{P_m M_m}}$$

We now have an expression for the volumetric flow rate of the gas, moving through the nozzle, that we can calculate from measured parameters. This is the last part of our puzzle and we can substitute this expression into Eq. 3-7. Doing this, we obtain:

(Eq. 3-13) $$\frac{1}{(1-B_{ws})} \frac{P_m T_s}{P_s T_m} K_m \sqrt{\frac{T_m \Delta H}{P_m M_m}} = 60 K_p C_p \sqrt{\frac{T_s \Delta p}{P_s M_s}} \pi \left(\frac{D_n}{(2)(12)} \right)^2$$

Notice now that we have an expression that contains both Δp and ΔH -exactly what we were looking for when we started with Eq. 3-2. If we do a little algebra, we can reorder Eq. 3-11 to the form of Eq. 3-2:

(Eq. 3-14) $$\Delta H = \left\{ 3600 D_n^4 \left(\frac{\pi K_p C_p}{(4)(144) K_m} \right)^2 (1-B_{ws})^2 \frac{M_m}{M_s} \frac{T_m P_s}{T_s P_m} \right\} \Delta p$$

This is the isokinetic rate equation which allows the source tester to adjust for isokinetic flow through the nozzle. In practice, the source tester observes the value of Δp at the sample point, solves Eq. 3-14, and then sets the fine control knob on the Method 5 train meter box until the calculated value of ΔH is reached on the orifice meter manometer. This process is repeated at each traverse point or even during sampling at one traverse point if the flue gas velocity is varying at that point. A source tester will typically calculate the "k" factor before the test run. If all of the: parameters remain relatively constant during the test, then it becomes necessary to multiply "k" by the new Δp reading at each traverse point.

There is another form of Eq. 3-14, the working form, that is more commonly used. The working form of the equation substitutes a different expression for the orifice meter calibration factor, Km. We can rearrange the orifice meter equation, Eq. 2-27, by solving for ΔH:

(Eq. 3-15) $$\Delta H = \frac{Q_m{}^2 P_m}{K_m^2 T_m} M_m$$

Instead of using K_m as the orifice meter calibration factor, the expression $\Delta H_@$ is used in source testing in the United States. The expression $\Delta H_@$ is defined as the orifice meter pressure

differential that gives a flow rate of 0.75 cfm of airflow through the meter at 68°F and 29.92 in. Hg If we substitute these conditions into Eq. 3-15, we have:

(Eq. 3-16) $$\Delta H_{@} = \frac{(0.75\text{cfm})^2(29.92\text{ in. Hg})}{(460 + 68°\text{F})K_m^2} 29.0(\text{lb/lb} - \text{mole})$$

or

$$\Delta H_{@} = \frac{0.9244}{K_m^2}$$

The value of K_m is determined when the orifice meter is calibrated. This is usually done in the laboratory before going into the field. The expression $\Delta H_{@}$ is useful since it denotes that, in a 60-minute period, approximately 45 ft^3 of gas will be sampled by the train at an orifice meter pressure differential of $\Delta H_{@}$.

Then, taking Eq. 3-16 and the fact that $K_P = 85.49$, we can substitute these into Eq. 3-14 to obtain the working form of the isokinetic rate equation.

(Eq. 3-17)

$$\Delta H = \left\{846.72 D_n^4 \Delta H_{@} C_p^2 (1 - B_{ws})^2 \frac{M_d}{M_s} \frac{T_m P_s}{T_s P_m}\right\} \Delta p$$

or

$$\Delta H = (k)\Delta p$$

One can also derive a corollary expression from Eq. 3-17 to assist in selecting a nozzle. Particulate testing is normally conducted at a flow rate of about 0.75 cfm. If the nozzle diameter is too small, a flow rate much higher than 0.75 cfm may be necessary in order to sample a minimum of 30 ft^3 of gas in a one-hour period. The pump may not have enough suction power to do this. Also, if the nozzle diameter is too large, at a flow rate of 0.75 cfm, a very large volume of gas might be sampled and the filter could plug up before the one-hour test is completed. So, to choose the nozzle, one first performs a preliminary velocity traverse to obtain an average Δp value, Δp_{avg}. This value is then used in the following expression:

(Eq. 3-18) $$D_n = \sqrt{\frac{0.0358 Q_m P_m}{T_m C_p} \frac{1}{(1 - B_{ws})} \sqrt{\frac{T_s M_s}{P_s \Delta p_{avg}}}}$$

Where: Q_m can be taken at 0.75 cfm or any other desired flow rate

Having calculated this value, the source tester then finds a nozzle that has a diameter closest to the calculated diameter. For example, if D_n were calculated to be 0.26 in., a quarter inch nozzle (D_n = 0.25 in.) would most likely be selected.

As you can see, these equations are somewhat complicated to solve. They require the entry of a number of constants and measured parameters, and sometimes assumed parameters. As discussed earlier, nomographs and special slide rules were originally developed to solve these

equations. When the techniques of using these devices were learned, they become very convenient in the field and the calculations can be performed very quickly. Today, software programs on computers have supplanted these devices. Calculations can be performed even more quickly with these software programs, but one must be particularly careful of keying errors when they are used. Also, particulate matter and acid gases in the test environment can foul calculators and computers. But if care is taken to protect a computer in such an atmosphere, a great deal of flexibility can be programmed to cross-check results and present source test data.

3.4 THE METHOD 5 SAMPLING TRAIN

INTRODUCTION

We now should recognize that it is essential to sample isokinetically if we wish to obtain a representative distribution of particle sizes in our sample. The Method 5 sampling apparatus has been designed to perform isokinetically. The apparatus – often called a sampling train – has several components, each having a different function. The Method 5 sampling train is shown in Figures 3-6, and Figure 3-7.

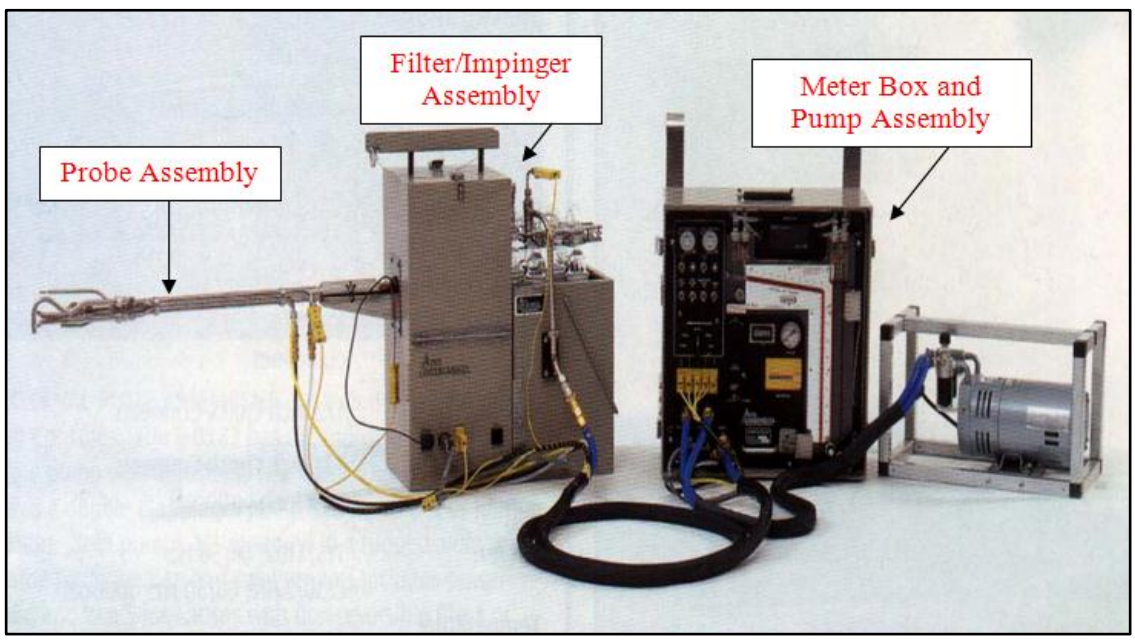

Figure 3-6. The Federal Reference Method 5 sampling train.

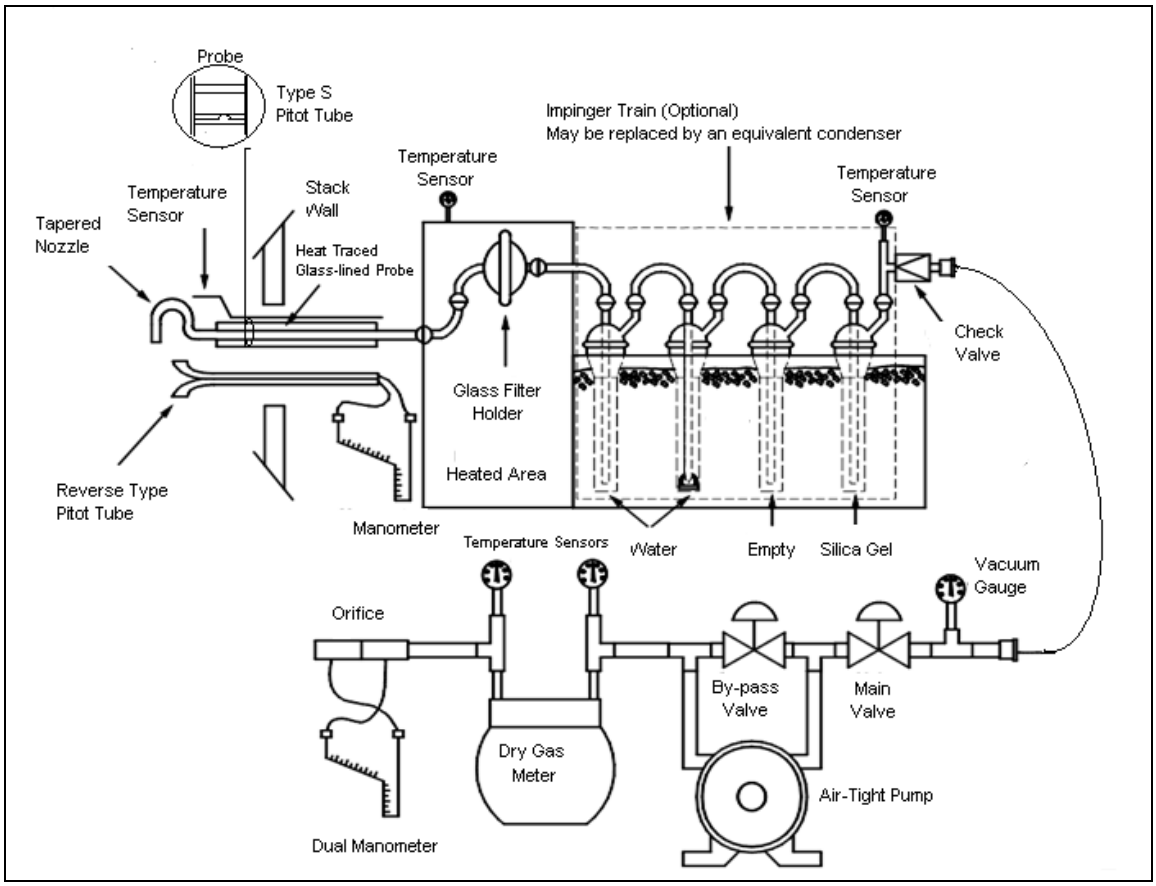

Figure 3-7. Schematic of a Method 5 sampling train.

METHOD 5 TRAIN OPERATION

The Method 5 sampling train is designed to determine both the stack gas velocity, v_s, and the nozzle inlet gas velocity, v_n. When one knows the value of v_s, then one can adjust the flow of gas through the sampling train so that the gas velocity at the nozzle inlet equals v_n.

When performing a source test, the test team may first conduct a number of preliminary tests (i.e., Methods 1 through 4) in order to obtain information necessary to operate the Method 5 train. These preliminary tests may include the sampling port location and cyclonic flow check (Method 1), determination of the average flue gas velocity (Method 2), the flue gas molecular weight (Method 3), the gas temperature (Method 2), the stack static pressure (Method 2), and the moisture content (Method 4). In frequently tested sources, this information may already be available; in some cases, the values are assumed.

With the preliminary data in hand, the source tester calculates the approximate size of the nozzle that will allow the system to collect approximately 30 dscf of gas over a one-hour period. Once the nozzle is selected, the sampling train is assembled and leak-checked.

Another calculation is then performed by solving the isokinetic rate equation. This calculation is necessary in order to know how to adjust the sampling pump and obtain a flow rate through the nozzle that is equivalent to the stack gas velocity. These traditional methods for solving the

isokinetic rate equation have been replaced with computer software programs involving Excel spreadsheets.
The EPA recently released the Electronic Reporting Tool (ERT). The ERT is used to electronically create and submit stationary source sampling test plans to regulatory agencies and, after approval, to calculate and submit the test results as an electronic report to the regulatory agency. The application will allow import of run data from spreadsheets or direct entry and calculation of parameters such as Isokinetic rate within the application. ERT can be downloaded from the following website http://www.epa.gov/ttn/chief/ert/index.html.

Use of software programs such as ERT has reduced the number of errors in performing Method 5 and reduced the time for calculations. This will be covered in greater detail in Chapter 5.

As we shall see, the isokinetic rate calculation is a lengthy one (but not overly complicated). The source tester does not have the time to calculate the values by longhand while testing, and therefore various stratagems were devised to obtain the isokinetic rates. Today, most source testers use software programs such as ERT on their laptop computers.

When performing the source test, an average value of the emissions must be obtained over the stack or duct cross-section. The gas velocity and/or particulate concentration may be stratified in the flue. For example, Figure 3-8 illustrates velocity isopleths in a rectangular duct.

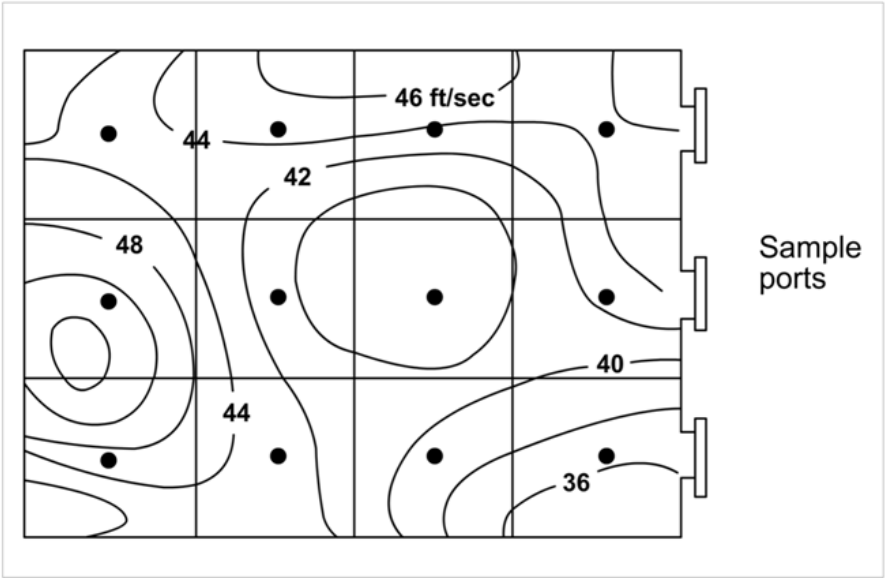

Figure 3-8. Variation of gas velocity in a rectangular duct and Method 1 traverse points.

Since the gas velocity and particulate concentration may vary from point to point, the EPA requires that sampling be performed over the cross-section, not at just one point. This requires the application of Method 1 criteria which lays out the grid of points at which one is to obtain a sample. In Figure 3-7, an imaginary grid is superimposed on the rectangular duct. When performing Method 5, sampling is conducted at each point of the grid to obtain an area-averaged total sample.

However, since the velocity of the gas is different at each point, the isokinetic sampling rate will be different at each point. This then is what we use the isokinetic rate equation for – to adjust the

flow of the gas through the sampling train so that we are sampling isokinetically at each point.

But how do we adjust this flow rate? This is done using the orifice meter and the fine control knob, which is shown just above the pump in Figure 3-6. The orifice meter tells us the flow rate of the gas that exits the Method 5 train, Q_m, where Q_m is a volumetric flow rate in ft^3/sec and determined by using the orifice meter equation (Eq. 2-27) given in Chapter 2. By knowing how fast the gas is exiting the train, we can back-calculate how fast it is coming into the front end of the train. By knowing how the ice bath (Figure 3-6) affects the volume of the sample (by changing its temperature and dropping out the moisture), we can know exactly what the nozzle gas velocity, v_n is, or alternatively, we can calculate the flow rate of gas through the nozzle, Q_n:

(Eq. 3-2) $Q_n = A_n v_n$

Where: D_n = nozzle volumetric flow rate (m^3/sec, ft^3/sec)
A_n = cross-sectional internal area of the nozzle (m^2, ft^2)
v_n = velocity of gas in nozzle (m/sec, ft/sec)

By using the isokinetic rate equation, we determine the orifice meter reading ΔH that will give us the proper nozzle flow rate. The fine control knob is then adjusted until the ΔH value on the orifice meter manometer is the same as that which we calculated.

The fine control knob adjusts a by-pass valve. From Figure 3-6, we can see that if the by-pass valve were fully open, the pump would just be drawing on itself and we wouldn't be pulling a vacuum through the system. As we close the valve, the vacuum increases and the flow rate of the gas through the nozzle increases. By opening and closing this fine control valve, we can correspondingly decrease or increase the suction at the nozzle, or correspondingly, decrease or increase the flow rate of the gas through the orifice meter.

So, in a one-hour test, with 12 traverse (sampling) points, the following principal steps are performed when conducting the isokinetic sampling method.

- The sample probe, with pitot tube attached (Figure 3-6), is inserted to a traverse point.
- The Δp reading, indicating the pressure drop across the pitot tube and consequently the flue gas velocity, v_s, is read on the pitot tube oil manometer (or equivalent pressure gauge).
- Using this value of Δp and the isokinetic rate equation, we determine the pressure drop across the orifice meter that will give the proper sampling rate through the nozzle.
- The fine control knob is adjusted until the value of ΔH calculated from the isokinetic rate equation is obtained. The vacuum, or suction, of the Method 5 train is then such that the velocity of the gas in the nozzle, v_n is equal to the flue gas velocity, v_s.
- Sampling is conducted for five minutes (with 12 traverse points) at the point. If the gas velocity should change during the five minutes, the ΔH value is recalculated and the fine control knob readjusted to maintain an isokinetic sampling rate through the nozzle.
- After five minutes, the probe is moved to the next point, the Δp reading is obtained at that point, and a new ΔH value is calculated. The fine control knob is adjusted again to obtain a flow rate through the system that will result in the proper gas velocity through the nozzle.
- This procedure is repeated for all the traverse points so that a sample of approximately

30 dscf is obtained over a one-hour period. This volume is measured by the dry gas meter. Of course, any particulate matter associated with this volume of gas is either caught on the filter or deposited in the probe and recovered. The particulate matter is collected on the filter @ 248°F ± 25°F and weighed and the concentration of particulate matter in the flue gas is obtained by dividing the mass of the particulate matter collected by the volume of the gas sampled in order to collect it.

3.5 METHOD 5 STACK TESTING EQUIPMENT

INTRODUCTION

Method 5 sampling train is comprised of unique sampling equipment, beginning with the probe/nozzle/pitot tube assembly, the heated filter box, the cold impinger box, the transfer line and the meter box assembly. This equipment may be either constructed by the source tester or purchased from a commercial vendor. It is more common today to find stack test consulting companies and agency test teams using commercial equipment. Figure 3-9 illustrates an actual Method 5 sampling train.

Figure 3-9. Photograph of a Method 5 sampling train.

There are, of course, many commercial variations of the train design; however, any train that is constructed or purchased must meet certain requirements. These requirements are given in detail in 40 CFR Part 60, Appendix A. Highlights of some of these requirements are covered in the following discussion, in which we start with the sample nozzle and go through the separate components of the train.

THE NOZZLE

Sampling nozzles are commonly constructed of stainless steel or quartz glass. The nozzle must have a sharp outside edge (taper angle ≤30°) and a buttonhook or elbow design. A range of nozzle sizes is required for conducting isokinetic sampling. The size of the nozzle used in the isokinetic sampling train is dependent upon the stack gas velocity and the material of construction of the nozzle is dependent upon the stack gas temperature. The most popular nozzles are constructed from 316 stainless steel. Optionally, the nozzles can also be coated

with Teflon® for special applications. Of course, nozzles can be constructed from other materials including borosilicate glass, inconel alloy or quartz. Typically, a set of nozzles purchased from a manufacturer contain 7 nozzles ranging from 0.125 inches in diameter (inside diameter) to 0.500 inches in diameter in 1/16 inch increments. Figures 3-10A and 3-10B picture a typical set of nozzles constructed of either quartz (Figure 3-10A) or stainless steel (Figure 3-10B). According to the EPA's Method 5 guidance, any material other than 316 stainless steel must be approved by the administrator.

Figure 3-10A and B. Photographics of typical quartz(L) and stainless steel nozzle sets (R).

The nozzle is connected to the Method 5 probe sheath and liner utilizing a ferrule, a 5/8 inch union, a backer ring, and an O-ring, as illustrated in Figure 3-11.

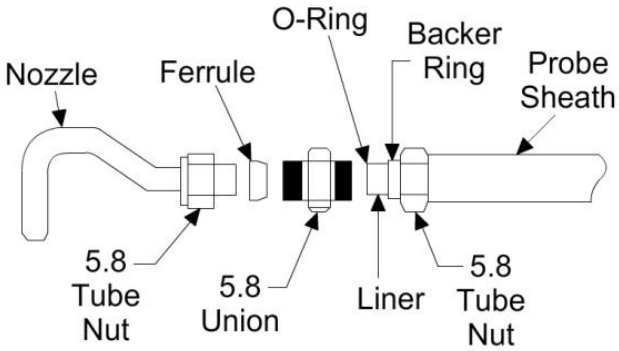

Figure 3-11. Illustration of nozzle attached to probe sheath.

The nozzle interior diameter must be accurately measured using calipers, as illustrated in Figure 3-12.

Figure 3-12. Calipers being used to determine internal diameter of the sampling nozzle.

The manufacturer's nozzle calibration is only a nominal approximation, and calibration of nozzle interior diameter should be checked before it is placed on the sampling probe at the test site.

The sampling nozzle interior diameter must be round and uniform throughout its entire length. If the tip is out-of-round it must be rounded, ground to a sharp edge, and recalibrated. If the nozzle has obvious flat places in its body, it should be replaced with a nozzle of uniform diameter.

Usually, the nozzle is used as part of a Method 5 probe and pitot tube assembly. As such, the nozzle, thermocouple, pitot tube and probe sheath must meet specific spacing requirements in relationship to each other in order to minimize disturbing the gas streamlines so a representative sample can be extracted from the source. These specifications help create the least amount of disturbance to the gas streamlines.

Figure 3-13 illustrates the preferred sampling nozzle shape and orientation to the Type S pitot tube.

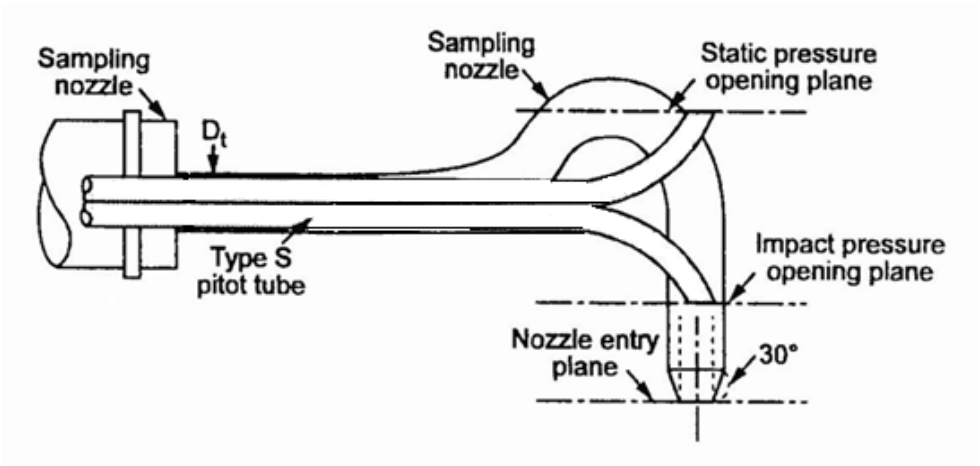

Figure 3-13. Preferred nozzle shape (assembled with a Type S pitot tube).

The nozzle must be properly aligned with the pitot tube so that a line can be drawn through the central axis of the interior nozzle diameter opening and the pitot opening. The nozzle must not be too short or too long. If the central axis of the pitot tube is not on the same line as the nozzle diameter it must be parallel and not more than ¼" off-center (Figure 3-14).

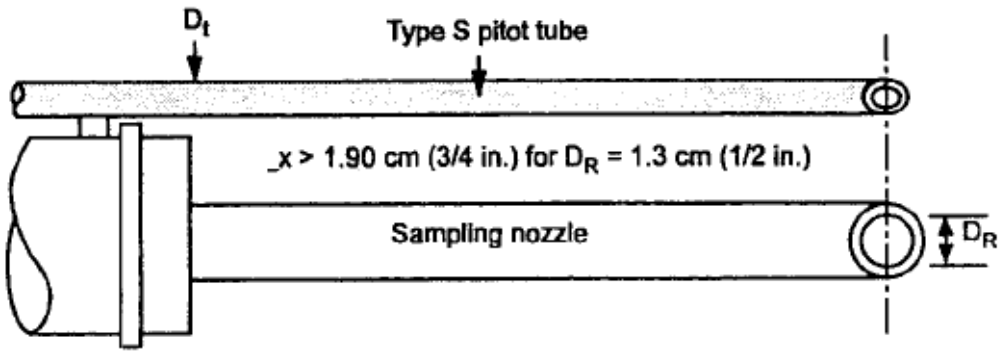

Figure 3-14. Nozzle alignment with the pitot tube.

THE PITOT TUBE

The Stausscheibe (Type S) pitot tube is the pitot tube most frequently used in conjunction with Method 5. The Type S pitot tube has several advantages that make it attractive for source sampling applications:

- It is compact. It is easy to insert into a 3 in. sampling port.
- It retains calibration in abusive environments.
- It has large sensing openings that minimize the chance of plugging in heavy particulate concentrations.
- It indicates a higher reading than a standard pitot tube-a feature that is beneficial in measuring low gas velocities.

The Type S pitot tube is not a designated standard. It should be calibrated against a standard pitot tube having a known calibration factor. In this calibration, one obtains the C_p value that we have seen in Eq. 2-26. If the tube is constructed according to the detailed design specifications of the Method (40 CFR Part 60, Appendix A), one may use an assumed value of $C_p = 0.84$ instead of performing a calibration.

SAMPLE PROBE—PITOT TUBE ASSEMBLY

The pitot tube should be firmly attached to the sampling probe and arranged in such a way that the pitot tube body will be oriented perpendicular to the stack wall when sampling. Figure 3-15A and 3-15B illustrate a properly positioned Type S pitot which respect to the probe nozzle.

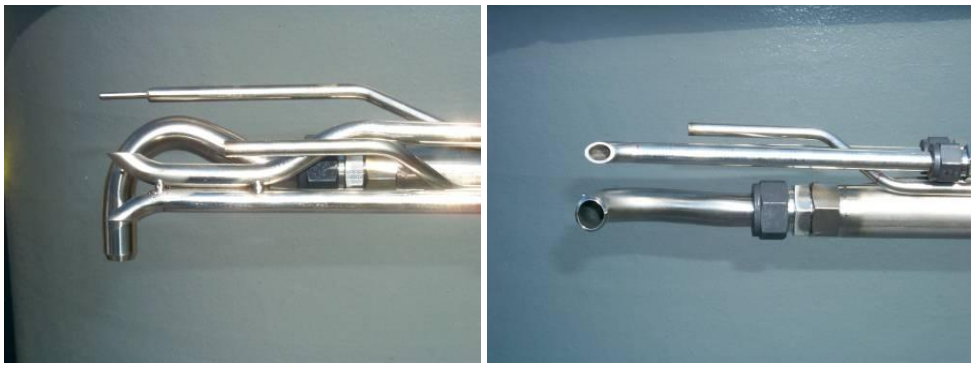

Figure 3-15 A and B. Proper orientation of Method 5 Type S pitot tube and thermocouple with reference to nozzle(R).

The sensing openings will then be perpendicular to the flow of gas parallel to the stack. This orientation is necessary for precise, accurate gas velocity readings. The pitot must be firmly attached to the probe so it will not slip accidentally into misalignment.

The sample probe consists of a probe sheath and a probe liner and incorporates a heater to bring it up to stack temperature (Figure 3-16). The nozzle, of course, is attached to the end of the probe and connects to the probe liner. The pitot tube is attached to the probe.

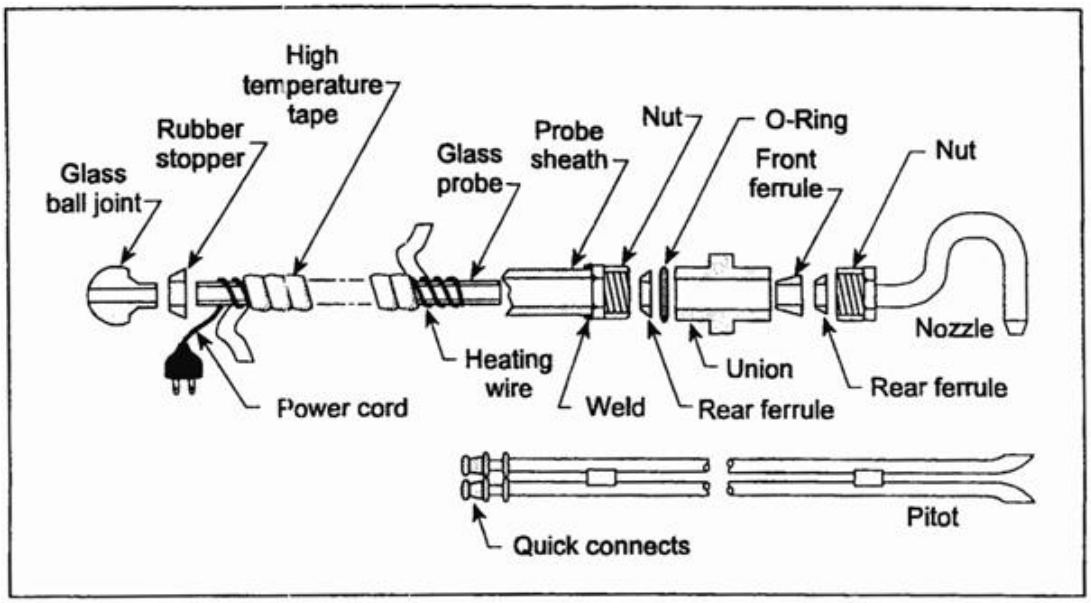

Figure 3-16. The sample probe – pitot tube assembly.

The stainless steel probe sheath should be of 316 stainless steel or equivalent. The sheath should be at least 3 in. from the pitot tube openings, and the nozzle must be at least 0.75 in. from the pitot tube when attached to the probe (Figure 3-15). A small hole should be drilled into the stainless steel sheath to equalize any pressure differential that might allow dilution air to be pulled into the sampling system.

The sheath is designed to protect the heated liner. The system should be designed so that the probe liner heating element does not short circuit. The liner should be borosilicate glass for sampling stack gases below 700°F. Quartz glass may be used in the sheath for temperatures up to 1400°F. Stainless steel liners are subject to corrosion by hot, acidic stack gases. They should be a last choice except for very difficult sampling applications or for sampling probes over 11 ft long. A liner heated by an easily removed, reusable heating element can be replaced at minimum cost. The probe heater should be calibrated so that the outlet gas temperature at the fitter is known. Table 3-2 provides recommended maximum temperatures to be used with the various types of material construction of the probe liners and fittings.

Table 3-2. Recommended maximum temperature for various probe liners and fitting materials.

Probe Liner Material	Recommended Maximum Temperature
Teflon®	350°F (177°C)
Viton®	500°F (260°C)
Glass Filled Teflon®	600°F (315°C)
Borosilicate Glass	900°F (480°C)
Stainless Steel	1200°F (650°C)
Quartz	1650°F (900°C)
Inconel	1800°F (980°C)
Graphite	1800°F (980°C)

THE SAMPLE CASE (HOT AND COLD BOXES)

A lightweight, easily adaptable sampling case is an asset during sampling experiments. The case should be solidly constructed and have well-insulated electrical connections. The filter compartment (see Figure 3-17) must have a calibrated thermostat. A positive locking system to prevent probe-pitot rotational or tilt misalignment in the stack is also necessary. Also, the design should be such that the probe sheath can be inserted into the sample case so that there is no accidental glass breakage. Figure 3-17, illustrates the connection of the probe to the filter assembly.

Figure 3-17. Illustration of probe sheath/liner connected to the filter assembly in the heated case.

Sample Box

There are several types of impinger-filter sets available for source sampling trains. Sample case impingers and filter holders are generally made of Pyrex® glass. Glass has obvious advantages and should be used unless unusual situations arise, which may call for stainless steel or Lexan® plastic equipment. An example of typical sample case glassware is illustrated in Figure 3-17.

Figure 3-18. Typical Method 5 cold box and glassware.

Glassware is available in standard ball joint fittings that are sealed with O-ring seals and clamped together, or in a screw joint sealed with a compressible Teflon® rubber ring. The screw joint fittings may increase breakage; however, they are easier to clean, and grease contamination of the sample is minimized.

THE UMBILICAL CORD

The vacuum sampling line, pitot tube lines, and electrical wiring are wrapped into an **umbilical cord** extending from the meter console to the sample case (Figure 3-19).

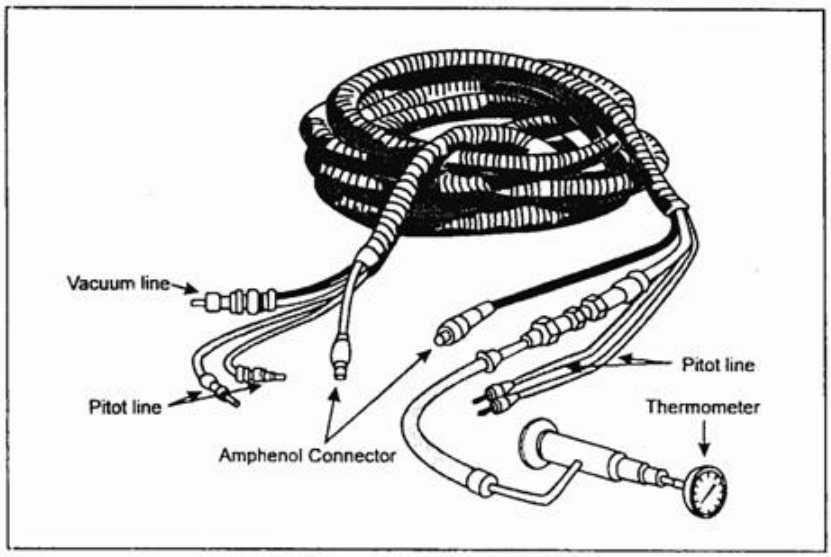

Figure 3-19. Traditional Method 5 umbilical cord.

These lines are encased it tape or shrink tubing to protect them and eliminate clutter at the sample site. The vacuum line should be of high-vacuum rubber tubing. The pitot lines are best constructed of heavy-ply Tygon® tubing. These materials make the umbilical cord heavier, but they are not easily melted, burned, or cut. Sample cords made of polymeric materials can be easily damaged and begin to leak. The electrical wires should have thick insulation to prevent fraying in heavy use. They should be color-coded and attached to an Amphenol connection for easy hookup to the sample case.

THE METER ASSEMBLY

The meter box is the center of the sampling system. The meter box consists of a packaged system that includes the pump, dry gas meter, orifice meter, manometers, and system valuing and controls. In some designs, the pump or meter box is provided in separate or attachable boxes in order to reduce the weight and provide greater ease in handling (Figure 3-20).

Figure 3-20. Typical Method 5 meter box assembly.

The system must have a leak-free pump to draw an isokinetic sample. A fiber vane, oil-lubricated pump or diaphragm pump capable of creating an absolute pressure of ≤ 3 in. Hg is recommended. A fiber vane pump is more desirable than a diaphragm pump, because it does not give "pulses" of gas that can create errors in the operation of the dry gas meter.

The pump should force gas into the dry gas meter inlet; rather than pull it through the meter outlet. The dry gas meter sliding vane seals are adversely affected when under vacuum, so a vacuum gauge should be in the system to measure the pressure drop across the sampling train.

The dry gas meter must be accurate. The manufacturer supplies a nominal calibration curve with the meter that should be rechecked before using the meter. A dry gas meter correction factor developed by calibration against a spirometer or wet test meter is important for volume readings from the meter. The meter dial face should measure 0.1 ft^3 of gas per revolution, which gives the most precise volume reading.

The differential pressure gauge recommended in Method 5 is an oil manometer. The manometer must be capable of measuring the velocity pressure to within 1.3 mm (0.05 in.) water column. The oil manometer is a secondary standard and is very accurate. A Magnehelic gauge may be used if it is calibrated before a test series, then checked after each test series against an oil manometer. The Magnehelic gauge must be calibrated and checked at three Δp readings representing the range encountered at the source. The Magnehelic gauge and oil manometer must agree within 5% for the Magnehelic gauge to be considered in proper calibration. Electronic manometers (pressure transducers) are also frequently used in test situations.

The meter console or equivalent apparatus must be capable of monitoring and maintaining all the equipment temperatures in addition to measuring stack gas temperature. Bimetallic thermometers in the sample case for impinger gas exit temperature are acceptable if they are precise to within 1°C (2°F). The temperature at the dry gas meter and at the filter compartment must be measured with a precision of 3°C (5.4°F).

Some method of regulating the calibrated probe liner heater and filter heater must be incorporated into the temperature control system. The stack gas temperature meter must measure gas temperature to 1.5% of the minimum absolute stack gas temperature. A meter

console using thermocouples for these operations must have the thermocouples calibrated regularly anti checked before each use.

Alternative Methods and Equipment

There are a number of alternative methods that can be used for the isokinetic sampling of stack gas particulate matter. European methods and the International Standards Organization Method (ISO 9096) have received attention in many countries. However, they are all very similar to Method 5, in that they are isokinetic sampling methods.

Differences arise principally in the placement of the filter, an issue that we will discuss later. Other differences occur in the details, such as nozzle design, pitot tube characteristics, limiting temperatures, and so forth. It is not certain how variation in these details will affect the net result of sampling the particulate concentration. However, as long as a set of procedures is standardized, data obtained by those procedures should be comparable to other data obtained using the same procedures.

FLEXIBLE METHOD 5 (FLEX 5) SAMPLING APPARATUS

The flexible Method 5 (FLEX 5) sampling train is a very versatile system allowing the tester to use in the flexible or the rigid arrangement. The major difference between the traditional Method 5 sampling train just discussed and the FLEX 5 sampling train is that the impinger box is not attached immediately behind the filter assemble, but is connected by a flexible unheated sampling line, as illustrated in Figure 3-21. This arrangement allows the heavier cold impinge assembly to rest on the cat walk or other locations around the stack rather than hanging from the traditional monorail system. Due to the non-standardized design of stacks and testing locations, arrangement of stack testing equipment is often a difficult task. The FLEX 5 sampling train enables the tester to easily and efficiently setup for those challenging environments, such as vertical traverses and space-limited areas. The use of the FLEX 5 sampling train is ideal for those areas where structural support of the monorail system is questionable or when safety is of concern.

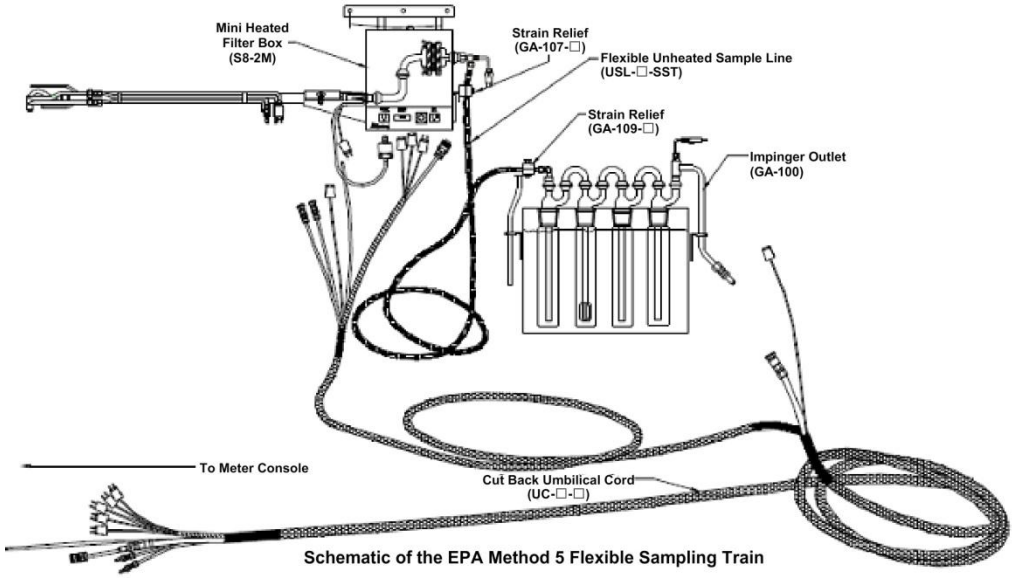

Figure 3-21. Schematic of the EPA Method 5 flexible sampling train.

COMPACT METHOD 5 (COMP 5) SAMPLING APPARATUS

The difference between the traditional Method 5 sampling train and the compact Method 5 (COMP 5) sampling train is that the traditional heated box around the filter assembly is replaced with a compact shell heated stainless steel filter assembly, as illustrated in Figure 3-22.

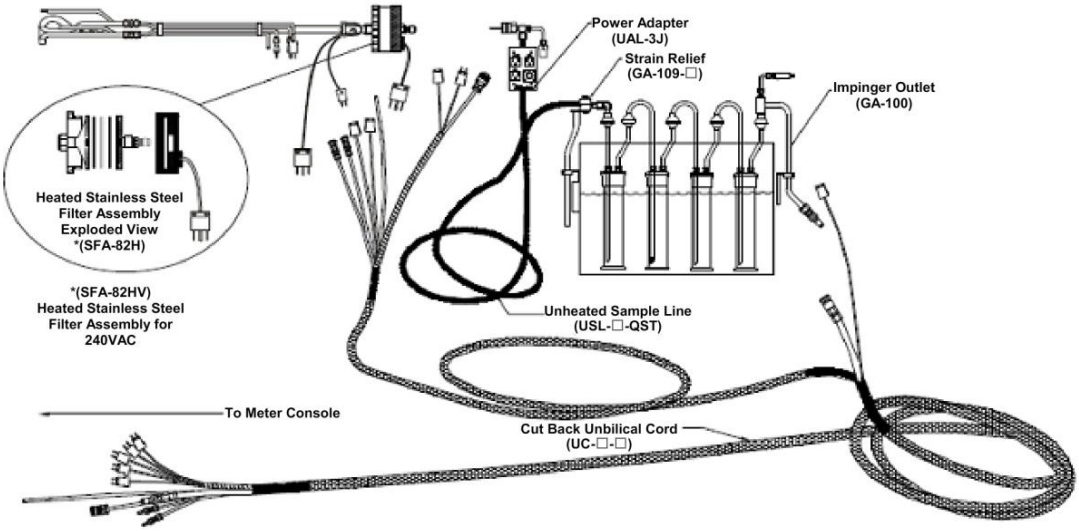

Figure 3-22. COMP 5 sampling train and shell heated filter assembly.

The filter assembly is held together by a two piece threaded clamping ring with an integral 300-watt ring heater. A Viton® O-ring seals the 90-mm filter and prevents sample bypass; a stainless steel shim prevents the filter from sticking to the O-ring. The compact shell heated stainless steel filter assembly is connected to the probe using standard fittings. The back of the filter assembly is connected to the downstream impingers by way of unheated sample line, similar to the FLEX 5 sampling train, as illustrated in Figure 3-22. Once again, COMP 5 sampling train is used at those sources where safety is concern involving a traditional Method 5 sampling train positioned on the monorail or where space-limited areas are concerned.

3.6 SUMMARY

THE METHOD 5 SAMPLING TRAIN

This chapter covered the following topics:

- Methods and equipment used in Method 5 sampling.
- Basic considerations for isokinetic sampling.
- The isokinetic rate equation.
- Sampling train operation.
- Equipment components of a sampling train.

BIBLIOGRAPHY

Aldina, G.J., and J.A. Jahnke. 1979. *Source Sampling for Particulate Pollutants.* (APTI Course 450 Student Manual). EPA 450/2-79-006. U.S. Environmental Protection Agency.

Allen, T. 1975. *Particle Size Measurement.* London: Chapman and Hall.

Cadle, R.D. 1975. *The Measurement of Airborne Particles.* New York: John Wiley & Sons.

Devorkin, H., R.L. Chass, A.P. Fudurich, and C.V. Kanter. 1963. *Air Pollution Source Testing Manual.* Air Pollution Control District, Los Angeles.

Hawksley, P.G.W., S. Badzioch, arnd J.H. Blackett. 1977. *Measurement of Solids in Flue Gases.* The Institute of Fuel, London.

Hinds, W.C. 1982. *Aerosol Technology: Properties, Behavior, and Measurement of Airborne Particles.* New York: John Wiley & Sons.

Office of the Federal Register National Archives and Records Administration. 1992. Standards of performance for new stationary sources. *Code of Federal Regulations,* Title 40 (Protection of Environment), Part 60, Appendix A.

Rom, J.J. 1972. *Maintenance, Calibration, and Operation of Isokinetic Source-Sampling Equipment.* APTD-0576. U.S. Environmental Protection Agency.

CHAPTER 4

4.0 THE FIRST FOUR REFERENCE METHODS

4.1 OVERVIEW

PURPOSE

The purpose of this chapter is to describe how Methods 1 through 4 are performed and the calculations used in each method.

LEARNING OBJECTIVES

At the conclusion of this training, students will be able to:

- Discuss why it is necessary to perform traverses of a stack cross-section when source sampling.
- Distinguish between "upstream" and "downstream" as used in reference method terminology.
- Determine the number of sampling points and their locations, for both circular and rectangular ducts.
- Explain what a Type S pitot tube is and how it works.
- Recite the pitot tube equation from memory.
- Describe how a velocity traverse is performed.
- Properly average the results of a pitot tube traverse.
- Describe three methods of determining the stack static pressure (p_s).
- Describe what an Orsat analyzer is and how it is used to determine the dry molecular weight of a flue gas.
- Describe Method 3A and list three performance test procedures that must be conducted before the method may be used.
- Describe three approximation methods that may be used for estimating flue gas moisture content.
- Describe how the wet bulb-dry bulb technique is performed.

OVERVIEW

The first four source test reference methods provide the preliminary information for conducting Method 5. If prior knowledge is available or reasonably good assumptions can be made, not all of the methods need to be conducted. As the isokinetic rate equation (Eq. 3-17) and the nozzle diameter equation (Eq. 3-18) indicate, a number of parameters must be established before isokinetic sampling can proceed. The first four reference methods provide the following information:

- Method 1:Number of traverse points

  - Method 1A – Small Ducts

- Method 2:Average gas velocity pressure (Δp_{avg}), pitot tube calibration coefficient (C_p), and absolute stack pressure (P_s)
  - Method 2A – Direct Measurement of Gas Volume Through Pipes and Small Ducts
  - Method 2B – Determination of Exhaust Gas Volume Flow Rate From Gasoline Vapor Incinerators
  - Method 2C – Determination of Gas Velocity and Volumetric Flow Rate in Small Stacks and Ducts
  - Method 2D – Measurement of Gas Volume Flow Rates in Small Pipes and Ducts
  - Method 2E – Determination of Landfill Gas Production Flow Rate
  - Method 2F – Determination of Stack Gas Velocity and Volumetric Flow Rate with Three Dimensional Probes
  - Method 2G – Determination of Stack Gas Velocity and Volumetric Flow Rate with Two Dimensional Probes
  - Method 2H – Determination of Stack Gas Velocity Taking into Account Velocity Decay Near Stack Walls

- Method 3:Wet stack gas molecular weight (M_s)
  - Method 3A – CO_2, O_2 Instrument
  - Method 3B – CO_2, O_2 Orsat
  - Method 3C – CO_2, CH_4, N_2, O_2 TCD

- Method 4:Percent moisture of stack gas (B_{ws})

These method are available for download at http://www.epa.gov/ttn/emc/. In addition to the source emission data for the parameters listed above, these reference methods also provide information on flue gas characteristics. They are important in the application of continuous emission monitoring (CEM) systems to stationary sources and are routinely cited in the CEM performance specification criteria of 40 CFR 60, Appendix B; 40 CFR Part 75, Appendix A; and 40 CFR Part 266, Appendix IX.

4.2 METHOD 1: SAMPLE AND VELOCITY TRAVERSES FOR STATIONARY SOURCES

INTRODUCTION

Method 1 (http://www.epa.gov/ttn/emc/methods/method1.html) specifies both the sampling site location and the location of the sampling points to which the source tester will be moving the Method 5 probe during a test. The basic principle behind the method is as follows: The more convoluted the ductwork, the more points that will need to be tested. If testing occurs at a point that is close to a bend in the ductwork, a fan, or some other disturbance such as the stack exit, the flow will not be uniform. The assumption is that the flue gas velocity and/or the particulate matter concentration could be more stratified in the area of the flow disturbance. (For example, see Figure 3-2 in Chapter 3.)

SAMPLING SITE CRITERIA

According to EPA criteria, a sampling location must be at a point in the stack or ductwork that is 8 duct diameters downstream from a disturbance and 2 duct diameters upstream from a flow disturbance (Figure 4-1).

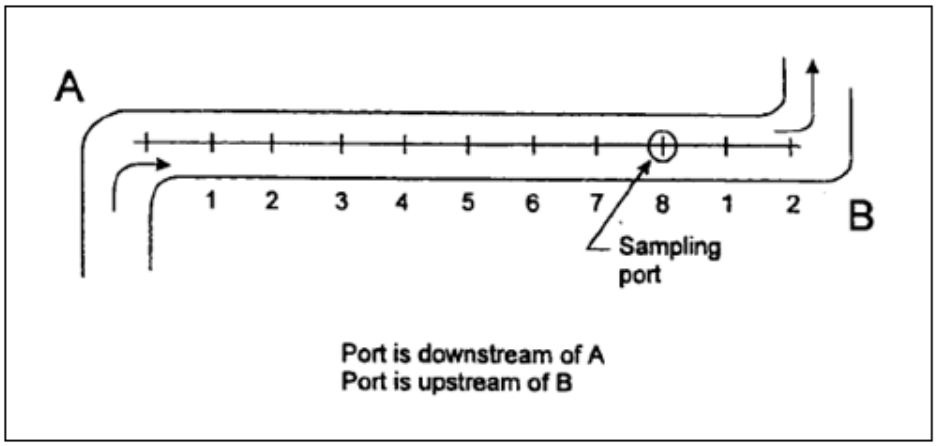

Figure 4-1. A sampling site 8 duct diameters downstream and 2 duct diameters upstream from ductwork disturbances (bends).

Note from Figure 4-1 that the sampling port is relatively far from the first bend in the ductwork. Although it is commonly assumed that this straight run of ductwork will help smooth out any velocity or particulate stratification that may have been developed by the bend, this may or may not be the case. The 8- and 2-duct diameter criterion is arbitrary and does not guarantee that the flow or particulate concentration is uniform at such a point. In fact, in Method 1, an alternate site may be selected if it is only 2 diameters downstream and 0.5 diameters upstream from a flow disturbance if more sample points are included in the traverse.

In the case of rectangular ducts, an *equivalent diameter*, D_e, is used in the siting and traverse point considerations, as shown in Equation 4-1.

(Eq. 4-1) $$D_e = \frac{2LW}{(L+W)}$$

Where: L = length of the duct
W = width of the duct

This equation is derived from the *hydraulic radius*, which is the cross-sectional area of the duct at the sampling site divided by the length of the perimeter. If the duct is non-rectangular (e.g., trapezoidal), the derivation technique given in Appendix A of this manual can be used to determine the hydraulic radius and then the equivalent diameter.

If a site does not even satisfy the 2-duct and 0.5-duct diameter criterion, a special test can be conducted to determine if the site is suitable for sampling. This test, which uses a directional flow-sensing probe (Figure 4-2), can also be used when swirling or cyclonic flow exists in a location that meets the 8-duct and 2-duct diameter criterion (see Guideline Document 008 at http://www.epa.gov/ttn/emc/methods/method1.html).

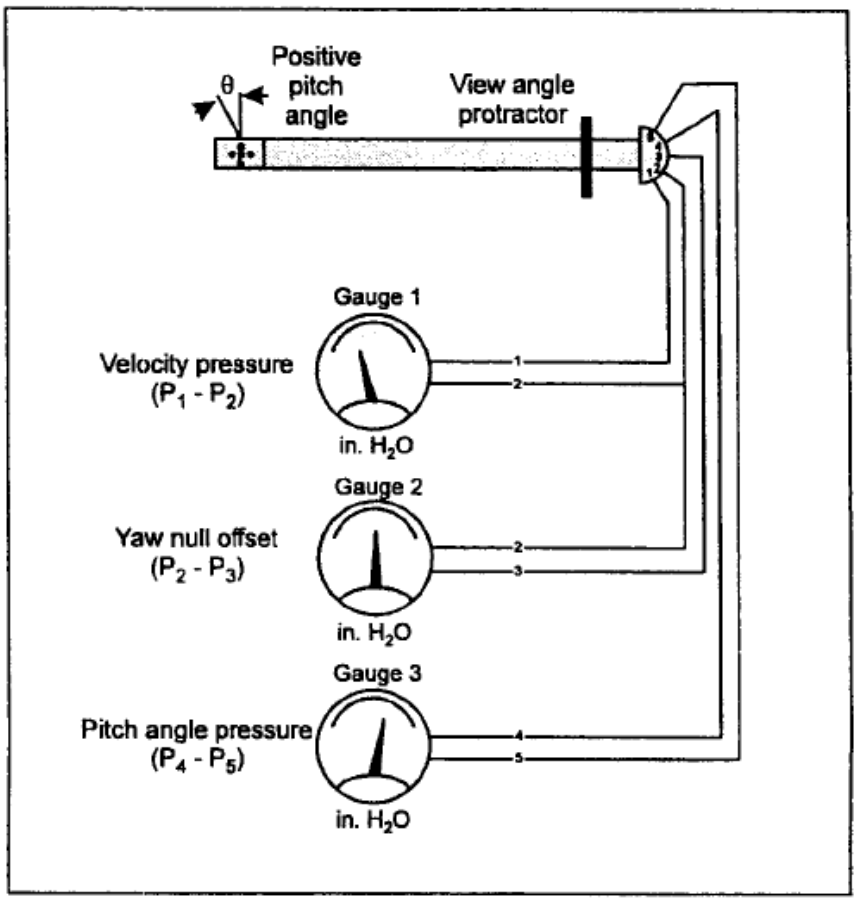

Figure 4-2. A directional flow-sensing probe.

In this test, the direction of the gas flow is determined at 40 or more sampling points on the cross-section. The location is deemed acceptable if the average resultant flow angle is less than

20°. (For an overview and application of the method, refer to Jernigan, 1993.[1])

SAMPLING POINT CRITERIA

Once the sampling site is selected, the number of sampling points is determined. In Method 1, the EPA has established two sets of sampling point criteria: one for velocity traverses, the other for particulate traverses. If a Method 5 test is being conducted, the source tester determines the number of points that must be tested by using a graph in Method 1, 40 CFR Part 60 (reproduced here as Figure 4-3).

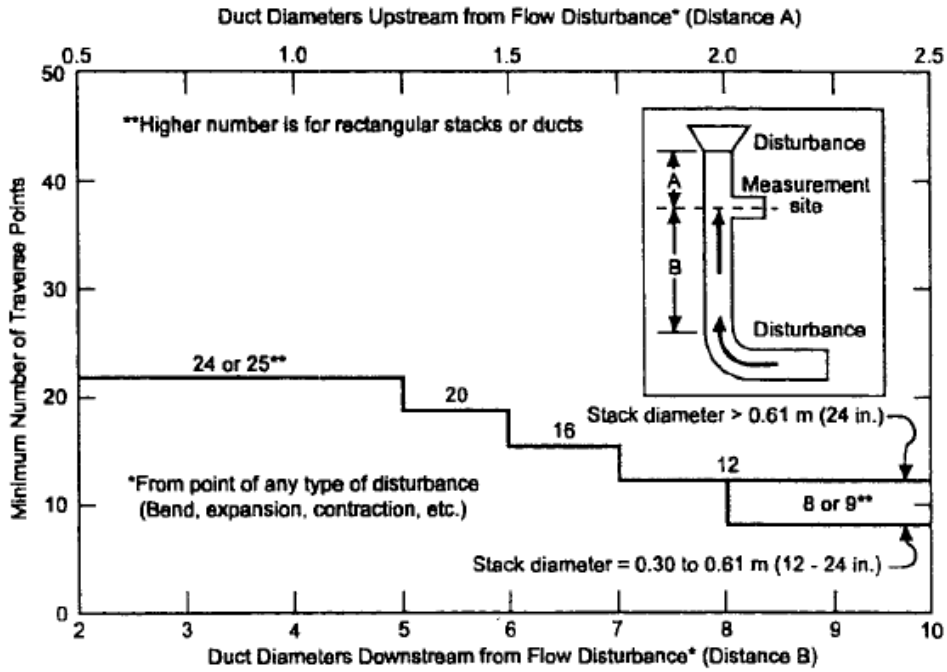

Figure 4-3. Minimum number of traverse points for a Method 5 particulate traverse.

To use the graph, mark on the bottom the number of duct diameters the sampling site is *downstream* from a disturbance. Then, on the top of the graph, mark the number of duct diameters the sampling site is *upstream* from a disturbance. From each point, draw a vertical line up or down through the graph to intersect the stepped line. The number of sampling points is given by the number on the step where the vertical lines intersect. If the vertical lines intersect different steps, use the higher-numbered step.

Fewer test points are required when performing a velocity traverse for gaseous sampling. The velocity traverse points are chosen in a similar manner but instead refer to the traverse point diagram for velocity determinations in Method 1, 40 CFR Part 60 (reproduced here as Figure 4-4).

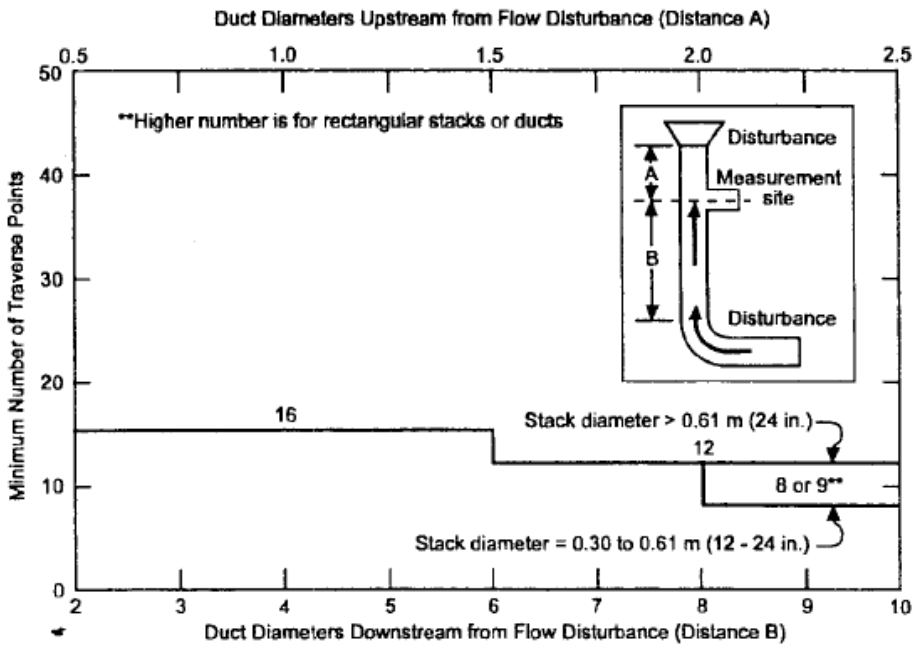

Figure 4-4. Minimum number of traverse points for a gaseous sampling velocity traverse.

The method for determining the number of traverse points is somewhat arbitrary. The idea is to measure a number of points over the cross-section so that a good, average value can be obtained for the particulate concentration or the flue gas velocity. One might think that the more points that are tested, the better the average would be. In fact, some European standards routinely require testing at 48 points, even at 8- and 2-duct diameter locations. It has been found, however, that sampling a large number of points may not necessarily yield a better number.[2] Since flow conditions can change in the duct during sampling, the longer the sampling, the higher the probability that the flow or particulate distribution will change. The numbers given in Figures 4-3 and 4-4 represent a compromise developed by the EPA that can result in a cross-sectional average obtainable over a reasonable length of time.

CROSS-SECTIONAL LAYOUT AND LOCATION OF TRAVERSE POINTS

After the number of sampling points has been selected, the source tester must determine where to put them. Two procedures in Method 1 are given for this purpose: one for rectangular ducts, the other for circular ducts.

In a rectangular duct, the requirement is simply that the cross-section be divided into a matrix of equal areas, equal to the number of traverse points (Figure 4-5).

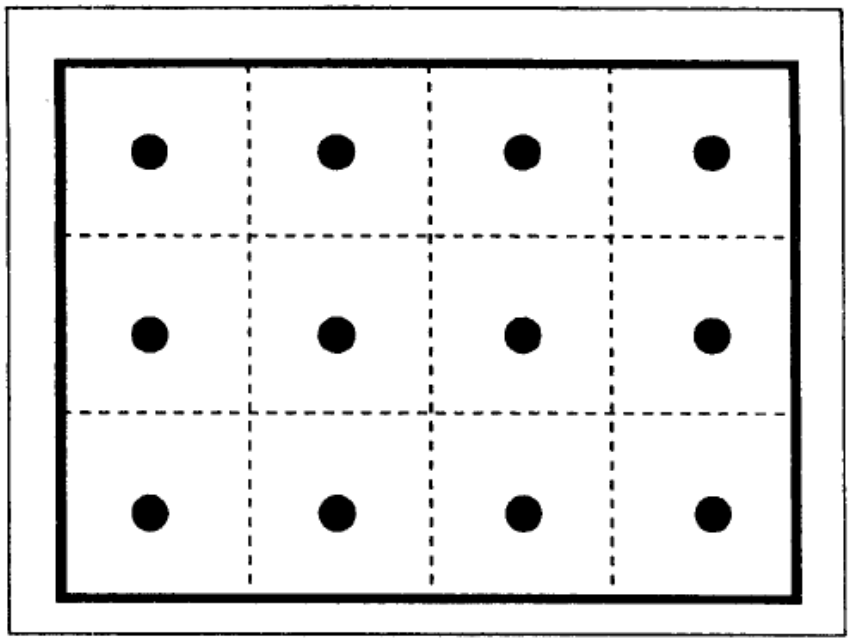

Figure 4-5. Example showing a rectangular duct cross-section for 12 traverse points divided into a matrix of 12 equal areas.

The matrix must be balanced. For example, one could not put in two ports on the duct of Figure 4-5 and sample at six points across the length of the duct for each port. Method 1 specifies the matrix layout: for 9 points, the layout is 3 × 3; for 12 points, 3 × 4 (Figure 4-5); for 20 points, 4 × 5; and so on. Sampling is then conducted in the center or *centroid* of each of the areas. (If an area were put on the tip of a pin, it would balance at the centroid.)

For a circular stack, in practice only two ports are needed for testing. If the probe or pitot tube is long enough and can be supported without sagging, it can be extended across the stack diameter to test at each point.

The dashed lines of Figure 4-6 divide the cross-section into four equal quadrants, each of which is further divided into equal areas. Traverse points are then located at the centroid of each of these areas.

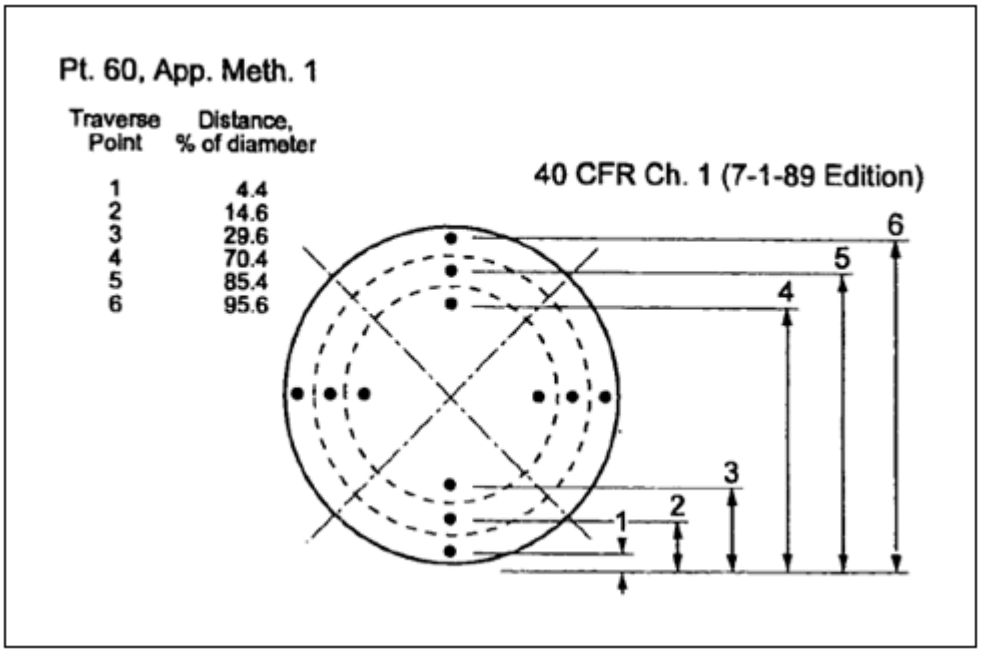

Figure 4-6. Equal areas and traverse points on a circular cross-section.

Determining traverse point locations for circular ducts or stacks is somewhat more complicated, since the equal areas are semicircular. The equation and derivation for this procedure is given in Appendix A of this manual, or refer to Table 4-1.

Table 4-1. Location of traverse points in circular stacks (percent of stack diameter from inside wall to traverse point).

Traverse Point on a Diameter	Number of Traverse Points on a Diameter											
	2	4	6	8	10	12	14	16	18	20	22	24
1	14.6	6.7	4.4	3.2	2.6	2.1	1.8	1.6	1.4	1.3	1.1	1.1
2	85.4	25.0	14.6	10.5	8.2	6.7	5.7	4.9	4.4	3.9	3.5	3.2
3		75.0	29.6	19.4	14.6	11.8	9.9	8.5	7.5	6.7	6.0	5.5
4		93.3	70.4	32.3	22.6	17.7	14.6	12.5	10.9	9.7	8.7	7.9
5			85.4	67.7	34.2	25.0	20.1	16.9	14.6	12.9	11.6	10.5
6			95.6	80.6	65.8	35.6	26.9	22.0	18.8	16.5	14.6	13.2
7				89.5	77.4	64.4	36.6	28.3	23.6	20.4	18.0	16.1
8				96.8	85.4	75.0	63.4	37.5	29.6	25.0	21.8	19.4
9					91.8	82.3	73.1	62.5	38.2	30.6	26.2	23.0
10					97.4	88.2	79.9	71.7	61.8	38.8	31.5	27.2

Table 4-2. Location of traverse points in circular stacks.

Traverse Point on a Diameter	Number of Traverse Points on a Diameter											
	2	4	6	8	10	12	14	16	18	20	22	24
11						93.3	85.4	78.0	70.4	61.2	39.3	32.3
12						97.9	90.1	83.1	76.4	69.4	60.7	39.8
13							94.3	87.5	81.2	75.0	68.5	60.2
14							98.2	91.5	85.4	79.6	73.8	67.7
15								95.1	89.1	83.5	78.2	72.8
16								98.4	92.5	87.1	82.0	77.0
17									95.6	90.3	85.4	80.6
18									98.6	93.3	88.4	83.9
19										96.1	91.3	86.8
20										98.7	94.0	89.5
21											96.5	92.1
22											98.9	94.5
23												96.8
24												99.9

Each number in the table is a percentage of the stack inside diameter. To use Table 4-1, divide the total number of traverse points (determined by using Figure 4-3 or 4-4) by 2 and find the resulting number *n* on the top of the table. Then multiply the diameter at the sampling port by each number to find the distance the probe must be inserted into the stack to be at the given traverse point. (However, be careful to adjust this number for the port length.) For example, for a 10-foot diameter stack with 16 traverse points on the cross-section, go to the column numbered 8 and multiply each number in the column by 10 and divide by 100 (to convert data in Table 4-1 from % to fraction). Then the first traverse point will be 0.32 ft from the stack wall; the second point will be 1.05 ft from the wall; the third, 1.94 ft; and so on. Notice that the center of the stack is not tested.

During a test, the probe or pitot tube is inserted into one port. After each traverse point is tested, the probe is moved to the other diameter. Points on the diameter perpendicular to the first are then sampled to complete the test. For particulate traverses, EPA requires that one diameter be in the plane where the greatest variation in particulate concentration is expected. For example, after a bend, one diameter should be in the plane formed by the bend.

CYCLONIC FLOW IN STACKS

Cyclonic or swirling flow may be encountered in a stack or duct due to certain circumstances such as cyclone collectors, tangential duct entry, or in-stack disturbances.

Sampling for particulate emissions in stacks or ducts with cyclonic flow patterns presents significant problems in obtaining representative measurements of concentrations and flow rates. Establishing the correct velocity for determining the isokinetic sampling rate is also difficult.

Sections 11.4 and 11.5 of Method 1 describe procedures for verifying the absence of cyclonic or other flow patterns not parallel to the stack or duct axis. If cyclonic flow is present, a sample should not be collected in that specific location unless the flow patterns can be changed.

The Emission Measurement Center has prepared a Guideline Document for evaluating specific limits of acceptability for the angles of flow using described procedures (see Guideline Document 008 at http://www.epa.gov/ttn/emc/methods/method1.html). The purpose of this guideline is to determine which options to consider when angular or cyclonic flow exceeds acceptable limits. Three guideline recommendations for measuring particulate emissions in such conditions are:

1. Find another location.
2. Install flow straightening vanes upstream of the sampling location.
3. Apply one of the modified sampling procedures.

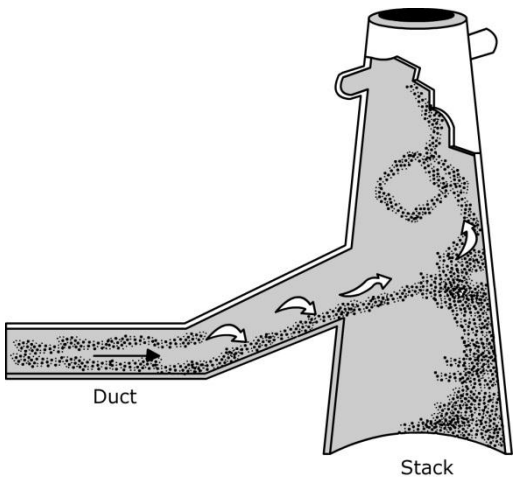

Figure 4-7. Areas of potential swirling and cyclonic flow in duct and stack.

Section 11.5.1 in Method 1 addresses the Alternative Measurement Site Selection Procedure, where measurement locations are less than 2 equivalent diameters or duct diameters downstream or less than 0.5 duct diameters upstream from a flow disturbance. The alternative should be limited to ducts larger than 24 inches in diameter, where blockage and wall effects are minimal. A directional flow-sensing probe is used to measure pitch and yaw angles of the gas flow at 40 or more traverse points; the resultant angle is calculated and compared with acceptable criteria for mean and standard deviation. Both the pitch and yaw angles are measured from a line passing through the traverse point and parallel to the stack axis. The pitch angle is the angle of the gas flow component in the plane that includes the traverse line and is parallel to the stack axis. The yaw angle is the angle of the gas flow component in the plane perpendicular to the traverse line at the traverse point and is measured from the line passing through the traverse point and parallel to the stack axis.

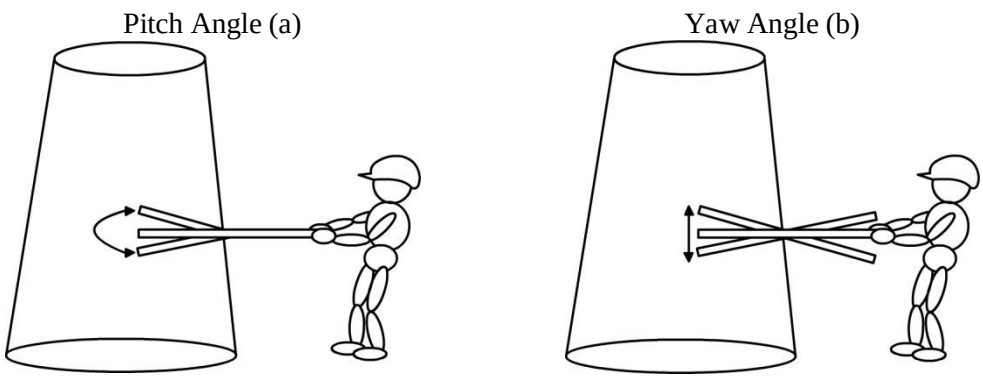

Figure 4-8. Direction of pitch and yaw angle in stacks.

Method 1 incorporates more details than given here. In particular, Method 1A gives criteria for sample traverses for stacks or ducts with diameters less than 1 ft. Since the sampling apparatus itself may interfere in the measurement of such small ducts, special precautions must be taken.

METHOD 1A

Method 1A (http://www.epa.gov/ttn/emc/methods/method1a.html) is identical to Method 1, except that it applies to flowing gas streams in ducts, stacks, and flues of less than about 0.30 meter (12 in.) in diameter or 0.071 m^2 (113 $in.^2$) in cross-sectional area, but equal to or greater than about 0.10 meters (4 in.) in diameter or 0.0081 m^2 (12.57 $in.^2$) in cross-sectional area. This method also cannot be used when the flow is cyclonic or swirling. In these small-diameter stacks or ducts, the conventional Method 5 stack assembly (consisting of a Type S pitot tube attached to a sampling probe, equipped with a nozzle and thermocouple) blocks a significant portion of the cross-section of the duct and causes inaccurate measurements. Therefore, for particulate matter (PM) sampling in small stacks or ducts, the gas velocity is measured using a standard pitot tube downstream of the actual emission sampling site (Figure 4-9). The straight run of duct between the PM sampling and velocity measurement sites allows the flow profile, temporarily disturbed by the presence of the sampling probe, to redevelop and stabilize

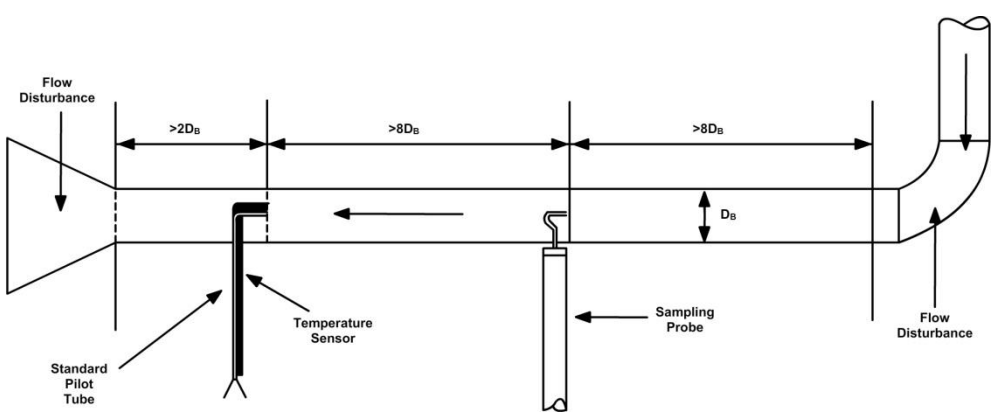

Figure 4-9. Recommended sampling arrangement for small ducts.

4.3 METHOD 2: DETERMINATION OF STACK GAS VELOCITY AND VOLUMETRIC FLOW RATE (TYPE S PITOT TUBE)

INTRODUCTION

Method 2 (http://www.epa.gov/ttn/emc/methods/method2.html) is used to determine flue gas velocity and volumetric flow rate using the Type S pitot tube. Method 2 is also used to certify flow monitors applied in continuous emission monitoring systems. This advanced application can be found in 40 CFR Part 60, Appendix B, and 40 CFR Part 75, Appendix A.

The method, as published in the Code of Federal Regulations, is quite lengthy, but most of the details describe how to calibrate the probe. Effectively, if the Type S probe meets certain design criteria, one can assume a value for its calibration coefficient, C_p. Alternatively, one can calibrate the pitot tube in a wind tunnel against a standard (Type L) pitot tube.

THE TYPE S PITOT TUBE

In an open tube placed in the direction of the flue gas flow, gas molecules will give up their kinetic energy of motion at the end of the tube to perform work on the gas already in the tube. This work impacts the gas already in the tube as a pressure known as the *stagnation pressure*. It can be measured on a manometer as shown in Figure 4-10a.

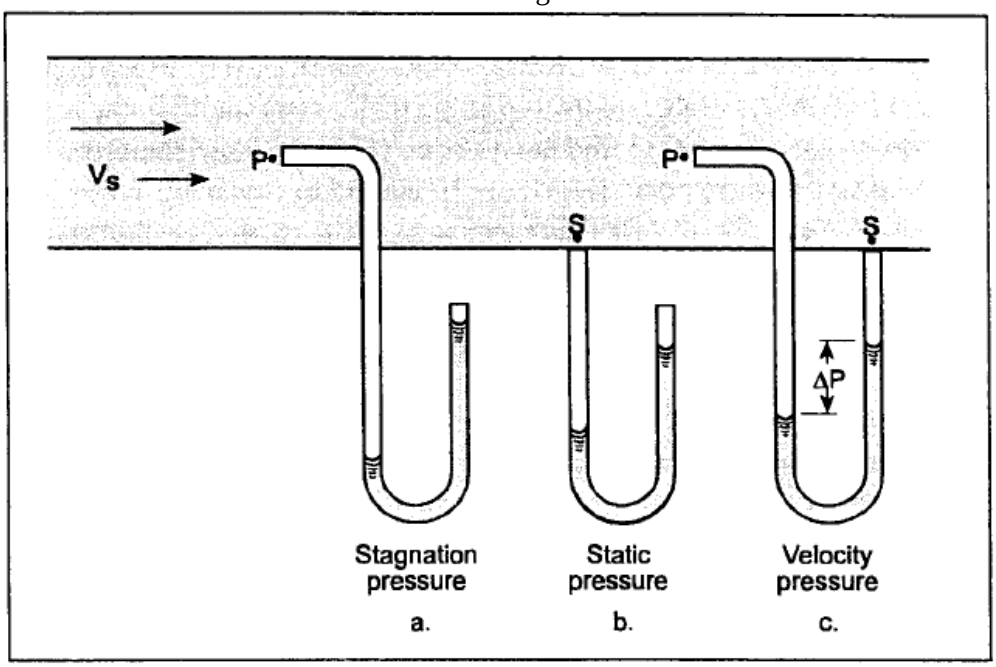

Figure 4-10. Components of pressure in a flowing gas stream.

However, in the duct itself, there is also the internal or *static pressure*. As discussed earlier, this can be sensed somewhat intuitively. If a port on the stack was opened and flue gas (with acid gas and particulate matter) blew outward, the internal stack pressure would clearly be positive. If instead a glove or a piece of paper were sucked into the stack, the static pressure

would clearly be negative. One of the best ways of measuring this pressure is to put a pressure tap on the side of the duct and connect it to a manometer as shown in Figure 4-10b.

The difference between the stagnation pressure and the static pressure is the *velocity pressure*, measured by the pitot tube. In Figure 4-10c, the velocity pressure can be measured by combining the measurement methods for the stagnation and static pressures. The difference in pressure between the two taps as measured on the manometer is known as the *pressure drop*, Δp.

In effect, the velocity pressure measurement is made by subtracting the internal stack pressure contribution (static pressure) from the total pressure at the tip of the tube. This velocity pressure can then be used in the pitot tube equation (Eq. 2-26) to calculate the flue gas velocity.

$$v_s = K_p C_p \sqrt{\frac{T_s \Delta p}{P_s M_s}}$$

Where: v_s = flue gas velocity (m/sec, ft/sec)
K_p = units factor

$$\text{(metric)}\ K_p = 3.97 \frac{m}{sec}\left(\frac{(g/g-mole)(mmHg)}{(°K)(mmH_2O)}\right)^{1/2}$$

or

$$\text{(English)}\ K_p = 85.49 \frac{ft}{sec}\left(\frac{(lb/lb-mole)(in.\ Hg)}{(°R)(in.\ H_2O)}\right)^{1/2}$$

Where: C_p = calibration factor
T_s = stack temperature (°K or °R)
Δp = velocity head of the stack gas (pressure drop) (mm H_2O or in. H_2O)
P_s = absolute stack pressure (mm Hg, in. Hg)
M_s = stack gas molecular weight (g/g-mole, lb/lb-mole)

Note: The derivation of this equation is given in Appendix A.

As noted in Chapter 3, before the advent of hand-held calculators and portable computers, special slide rules and nomography were commonly used to perform this calculation. A nomogram is a graphical representation of a formula that requires some manipulation of scales and lines to obtain a result that one might otherwise have to calculate. A nomograph is a device that is constructed to assist in this manipulation, much like a slide rule. These traditional methods for solving the isokinetic rate equation have been replaced with computer software programs involving Excel spreadsheets and the EPA Electronic Reporting Tool (ERT).

The measurement system shown in Figure 4-10c could be used to measure the flue gas velocity; however, more practical devices have been developed for stack testing. Many types of pitot tubes have been designed to measure flow, and they all work, in one way or another, according to the Bernoulli principle.

The standard pitot tube and the Type S pitot tube are are shown in Figure 4-11 and 4-12. The

Type S pitot tube is used used in Method 2 and the standard pitot tube is used in Method 2C for small stacks or ducts.

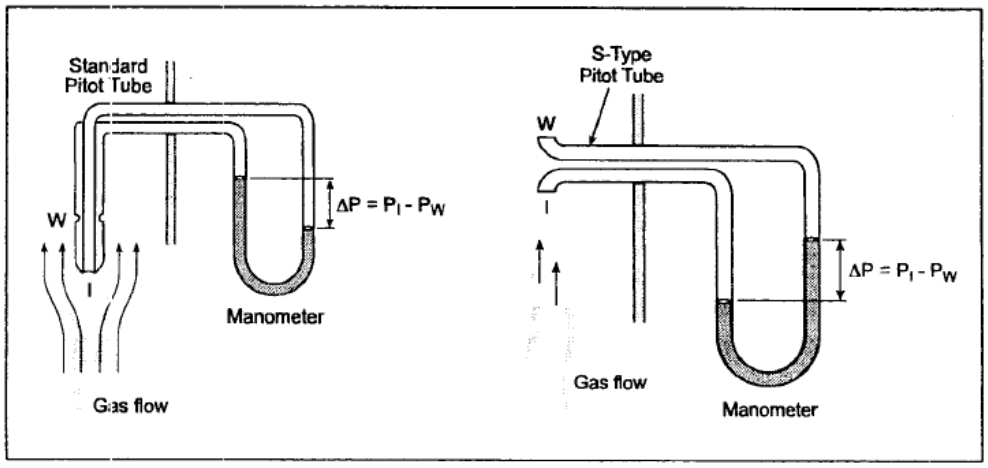

Figure 4-11. Standard pitot tube. Figure 4-12. Type S pitot tube.

Each of these tubes measures an impact or stagnation pressure at point *I*, analogous to the pressure measurement shown in Figure 4-10a and a wake pressure analogous to the pressure of measurement shown in Figure 4-10b. Both the Standard and Type S pitot tubes combine the measurements to obtain the velocity pressure of Figure 4-10c. However, at point *W*, a wake pressure or pseudo-static pressure is measured. In the case of the standard pitot tube (Figure 4-11), the wake pressure is very close to the static pressure measured in Figure 4-10b. In the case of the Type S pitot tube (Figure 4-12), however, the turbulence due to the shape of the tube causes the wake pressure to be lower than the true static pressure of the stack.

The differences between the wake pressure and the static pressure can be accounted for through the calibration factor, C_p, in the pitot tube equation. In the standard pitot tube, the C_p will usually have a value from 0.98 to 1.00. In the Type S pitot tube, due to its odd shape and the placement of the wake pressure tube behind the impact tube, the value of C_p will vary from 0.79 to 0.87. In practice, if the Type S pitot tube is designed correctly (see Chapter 7), a value of 0.84 can be assumed. It can, however, be calibrated in a wind tunnel, using the standard pitot tube as a standard.

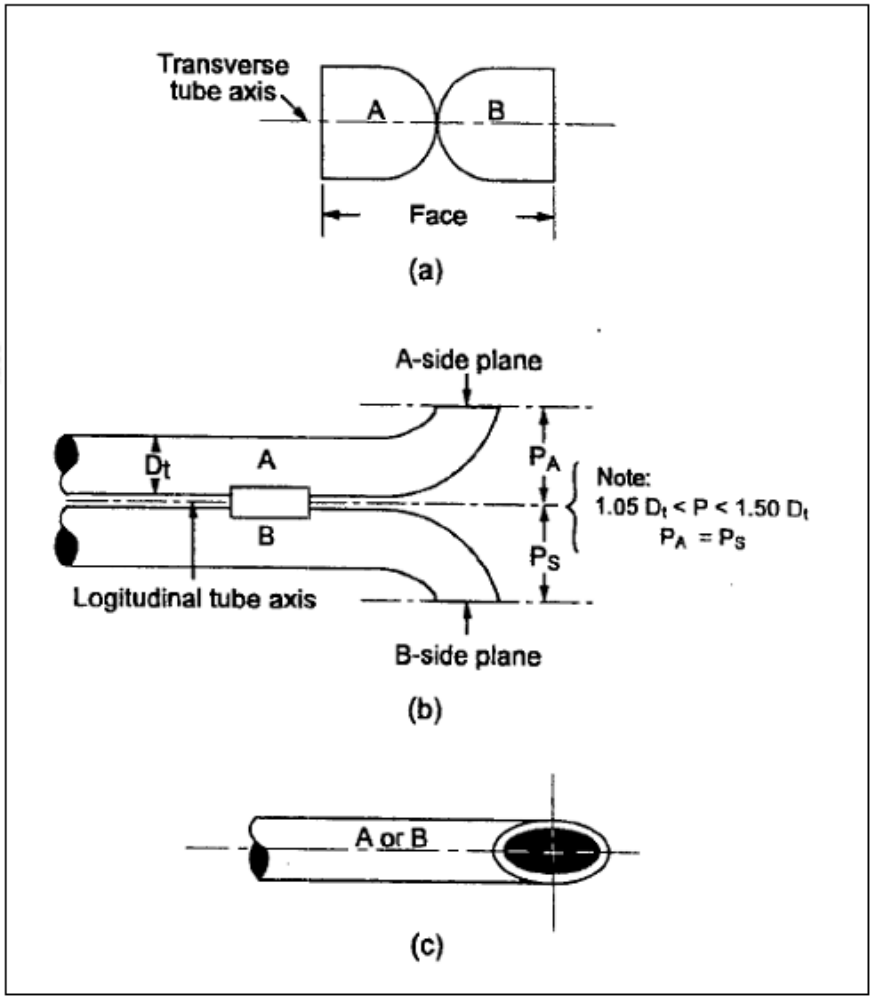

Figure 4-13. Tip of the Type S pitot tube.

The standard pitot tube is usually not used in source testing, since the orifices on the side of the tube used to measure the static pressure can become easily clogged with particulate matter. The Type S tube has larger openings. Usually constructed from 3/8 in. tubing, the tubes are less prone to clogging and can be easily blown out if they should become plugged.
Another feature of the Type S tube is that it gives a greater deflection on the manometer than a standard tube. Since the wake pressure is lower than the true static pressure, the Δp will be greater than for the standard tube. This enables the Type S pitot tube manometer to be more readable and the system to measure more accurately than the standard tube at lower flue gas velocities.

4.4 METHODS 2A THROUGH 2H

INTRODUCTION

Since the Type S pitot tube may not be suitable or able to provide the required information necessary for representative results, the EPA has provided other promulgated methods for

velocity and flow measurements that have specific source-type applicability. The following list shows the other Method 2 categories and their applications. These methods can be viewed at http://www.epa.gov/ttn/emc/.

Method 2A - Direct Measurement of Gas Volume through Pipes and Small Ducts. This method is applicable when determining gas flow rates in pipes and small ducts, either in-line or at exhaust positions, within the temperature range of 0°to 50°C (32° to 122°F) using a positive displacement meter, turbine meter, or other direct measuring device capable of measuring volume to within 2 percent.

Method 2B - Determination of Exhaust Gas Volume Flow Rate from Gasoline Vapor Incinerators. This method is applicable when determining exhaust volume flow rate from incinerators that process gasoline vapors consisting primarily of alkanes, alkenes, and/or arenes (aromatic hydrocarbons). Organic carbon concentration and volume flow rate are measured at the incinerator inlet using either Method 25A or Method 25B and Method 2A, respectively. The ratio of total carbon at the incinerator inlet and outlet is multiplied by the inlet volume to determine the exhaust volume flow rate.

Method 2C - Determination of Gas Velocity and Volumetric Flow Rate in Small Stacks or Ducts (Standard Pitot Tube). This method is applicable when determining average velocity and volumetric flow rate of gas streams in small stacks or ducts. A standard pitot tube that meets the Method 2 specifications is utilized, which is one that uses a defined coefficient of one when calibrated against another standard pitot tube with a NIST-traceable coefficient.

Method 2D - Measurement of Gas Volume Flow Rates in Small Pipes and Ducts. This method is applicable when determining the volumetric flow rates of gas streams in small pipes and ducts. All the gas flow in the pipe or duct is directed through a rotameter, orifice plate, or similar device to measure flow rate or pressure drop.

Method 2E - Determination of Landfill Gas Production Flow Rate. This method is applicable when determining the measurement of landfill gas (LFG) production flow rate from municipal solid waste landfills and is used to calculate the flow rate of non-methane organic compounds (NMOC) from landfills. First, a blower is used to extract LFG from the landfill. Then the LFG composition, landfill pressures, and orifice pressure differentials from the wells are measured, and the landfill gas production flow rate is calculated.

Method 2F - Determination of Stack Gas Velocity and Volumetric Flow Rate with Three-Dimensional Probes. This method is applicable when determining yaw angle, pitch angle, axial velocity, and the volumetric flow rate of a gas stream in a stack or duct using a three-dimensional (3–D) probe. A 3–D probe is used to determine the velocity pressure and the yaw and pitch angles of the flow velocity vector in a stack or duct.

Method 2G - Determination of Stack Gas Velocity and Volumetric Flow Rate with Two-Dimensional Probes. This method is applicable when determining yaw angle, near-axial velocity, and the volumetric flow rate of a gas stream in a stack or duct using a two-dimensional (2–D) probe. A 2–D probe is used to measure the velocity pressure and the yaw angle of the flow velocity vector in a stack or duct. From these measurements and a determination of the stack gas density, the average near-axial velocity of the stack gas is calculated.

Method 2H - Determination of Stack Gas Velocity Taking into Account Velocity Decay

near the Wall. This method is applicable in conjunction with Methods 2, 2F, and 2G to account for velocity decay near the wall in circular stacks and ducts. The method contains two possible procedures: a calculational approach that derives an adjustment factor from velocity measurements, and a default procedure that assigns a generic adjustment factor based on the construction of the stack or duct.

FLOW-CALC SOFTWARE

The 1999 revisions to 40 CFR Part 75 added requirements for the electronic reporting of point data for Relative Accuracy Test Audits (RATAs) performed using the new flow reference methods (Methods 2F, 2G, 2H). FLOW-CALC is a software tool that was developed by EPA's Clean Air Markets Division for stack testers who perform flow RATAs for units under the Acid Rain Program, the Ozone Transport Commission (OTC) NO_x Budget Program, and the State Implementation Program (SIP) NO_x Budget Trading Program. The software is designed to improve data quality and facilitate the entry of flow RATA data.

The software is designed to work in conjunction with EPA's Monitoring Data Checking (MDC) software. MDC is a tool that allows regulated industry and state agencies to enter, analyze, and print electronic monitoring plan data, certification data, and quality assurance data (including RATAs) in the format required by the Acid Rain and NO_x Budget Programs. The FLOW-CALC software performs many of the data checks performed by MDC on flow RATA data. RATA data exported from FLOW-CALC can be imported to the MDC software for additional checks for consistency with the facilities' electronic monitoring plan data.

The amount of point data can be very large, and entering the data into the EDR format from a RATA test report is time consuming, as well as subject to entry errors. The software will allow entry of the RATA data during the test, with evaluation features to check the data. FLOW-CALC performs all calculations and contains export features to convert the data electronically into an EDR v2.1 format.

The software performs five basic tasks:

- **Data Entry.** Entry of probe calibration, reference method measurement, and continuous emission monitor data.
- **Calculations.** Calculation of reference method and RATA results.
- **Evaluation.** Evaluation of data to identify potential errors and inconsistencies (checks are similar to those in EPA's Monitoring Data Checking [MDC] software).
- **Printing.** Printing of the data in easy-to-read report formats.
- **Export.** Export of data into EDR v2.1-formatted ASCII files.

The program supports flow RATAs performed with all EPA flow reference methods (including Methods 2, 2F, 2G, and 2H). The program and user's manual is available on the Clean Air Markets website: (http://www.epa.gov/airmarkets/).

CALCULATING THE AVERAGE VELOCITY

When measuring the flue gas velocity with a pitot tube, the tube is inserted into the stack or duct to a Method 1 traverse point. A reading is taken and the tube is moved to the next point.

After all the readings have been obtained, an average value for the flue gas velocity can be calculated by averaging the square roots of the Δp readings (Eq. 4-2).

(Eq. 4-2) $$\left(\sqrt{\Delta p}\right)_{avg} = \frac{1}{n}\sum_{j=1}^{n}\sqrt{\Delta p_i}$$

Where: n = the number of traverse points

Eq. 4-2 then becomes:

(Eq. 4-3) $$v_s = K_p C_p \left(\sqrt{\Delta p}\right)_{avg}\sqrt{\frac{T_s}{P_s M_s}}$$

It is not correct to first average the Δp and then take the square root. This will give a different answer than the procedure given above.

However, note that several other parameters are needed before calculating the velocity. The temperature, T_s, is usually measured by a thermocouple attached to the end of the pitot tube or the Method 5 probe. The molecular weight of the stack gas, M_s, is measured by Method 3 (discussion below). Lastly, the stack static pressure, P_s, is calculated by obtaining the local barometric pressure and measuring the stack static pressure (Eq. 4-4).

(Eq. 4-4) $$P_s = P_{bar} + \frac{p_s}{13.6}$$

Where: P_s = the absolute stack static pressure (in. Hg)
P_{bar} = the barometric pressure at the test site
p_s = the stack static pressure measured by a pressure gauge or manometer (in. H_2O)
13.6 = unit conversion factor (13.6 in. H_2O = 1 in. Hg)

The static pressure can be measured in several ways. Several methods are shown in Figure 4-14.

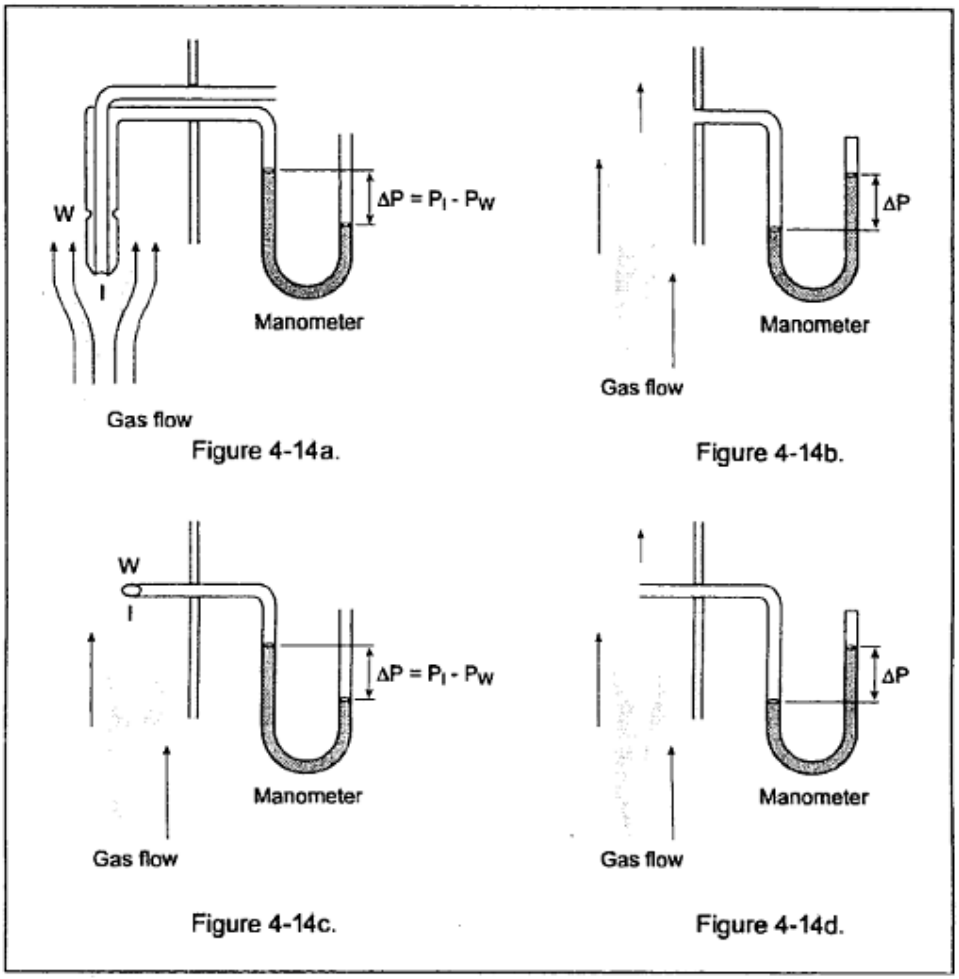

Figure 4-14. Measurement of the stack static pressure.

The first method, shown in Figure 4-14a, is conducted by inserting a standard tube in the duct or stack, removing the tubing from the impact pressure side of the manometer, and measuring the pressure of the static tap. This method is quick, convenient, and relatively accurate.

A duct static tap, shown in Figure 4-14b, will give the best measurement of p_s, if the tap is flush with the inside wall of the duct and there are no leaks at the tap.

If a standard tube is not available or problems occur due to plugging, the Type S pitot tube (Figure 4-14c) can be used by rotating it 90° from the direction of flow. Detach one of the tubes from the manometer and measure p_s. A straight tube (Figure 4 14d) can also be used by inserting it directly into the stack and measuring the pressure. However, these last two methods are not as accurate as the first two, since they both disturb the flow, creating turbulence around the tube opening that can affect the pressure reading. The effect can be pronounced at static pressures less than 1 in. H_2O.

However, the accurate measurement of p_s is not critical. Since the *absolute* stack static pressure is used in the pitot tube equation, ±1 in. H_2O/13.6 added to a barometric pressure of 29.92 in. Hg is not particularly significant.

4.5 METHOD 3: GAS ANALYSIS FOR THE DETERMINATION OF DRY MOLECULAR WEIGHT

The determination of the flue gas molecular weight is necessary for the solution of both the pitot tube equation and the isokinetic rate equation. For combustion processes, the *dry* molecular weight is given by the following expression:

(Eq. 4-4) $$M_d = 0.440\left(\%CO_2\right) + 0.320\left(\%O_2\right) + 0.280\left(\%N_2 + \%CO\right)$$

Where: M_d = Dry molecular weight of stack gas
$\%CO_2$ = Volume percent of CO_2 in dry stack gas
$\%O_2$ = Volume percent of O_2 in dry stack gas
$\%N_2$ = Volume percent of N_2 in dry stack gas
%CO = Volume percent of CO in dry stack gas

Method 3 (http://www.epa.gov/ttn/emc/methods/method3.html) is used in the determination of the % CO_2, % O_2, and % CO, if carbon monoxide is present at percentage levels. The nitrogen percentage is obtained by adding the above percentages and subtracting from 100. For emission sources that contain percentage levels of other gases, the composition of the flue gas must be determined and Eq. 4-6 modified to reflect that composition. The general equation is:

(Eq. 4-5) $$M_{mix} = \sum B_i M_i$$

Where: B_i = mole fraction of gas *i*
M_i = molecular weight of gas *i*

Method 3 specifies the use of an Orsat analyzer (Figure 4-15).

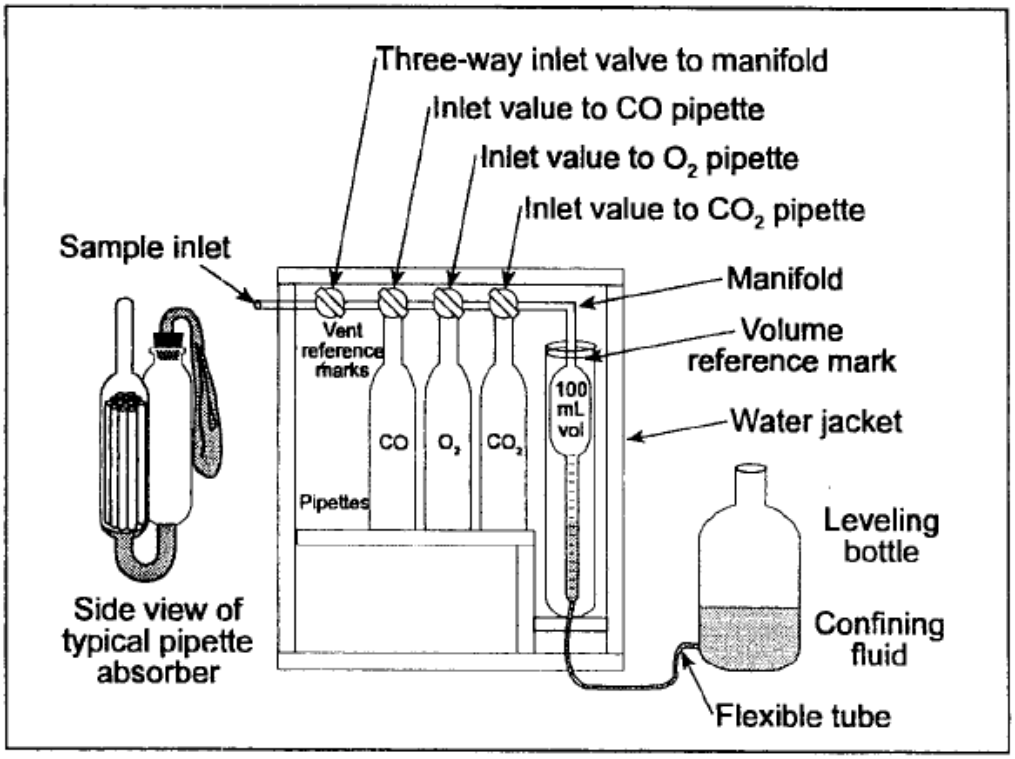

Figure 4-15. A typical Orsat analyzer for measuring % O_2, % CO_2, and % CO.

In using the analyzer, a volume of sample gas is drawn into the measuring burette. This burette contains water, which is alternately forced in and out of the leveling bottle. The sample is alternately passed through tubes containing absorbing solutions. Potassium hydroxide is commonly used for absorbing carbon dioxide, alkaline pyrogallic acid for absorbing oxygen, and an acidic solution of cuprous chloride for absorbing carbon monoxide (although this part of the procedure is usually omitted).

The operation of the Orsat analyzer requires a straightforward but somewhat difficult technique. One must move the leveling bottle up and down to force the sample gas through the absorbing tubes. The reduction of gas due to absorption is measured on the burette. The deft movements required in this method suggest that only those experienced in its use be permitted to perform it in a compliance source test.

Because of the water in the leveling bottle and the burette, the sample gas becomes saturated with water. The measurement, however, is a dry one, because it is made by comparing differences in level in the burette. Any contribution by water vapor cancels out.

Either grab or integrated sampling techniques may be used to obtain a Method 3 sample. Grab sampling is used when the gas composition is unstratified and doesn't vary over time. Here, a simple squeeze bulb draws a sample through a glass wool filter, which removes particulate matter, and passes it to the Orsat analyzer (Figure 4-16).

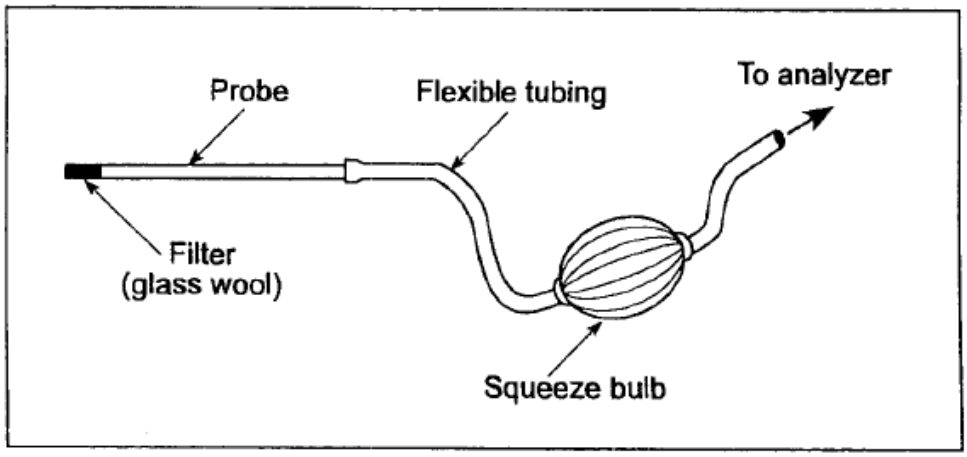

Figure 4-16. Grab sampling.

In integrated sampling, a sample is drawn into a Mylar bag over a period of time. If the flue gas composition is fluctuating over that period, the bag sample will represent an average of that composition (Figure 4-17).

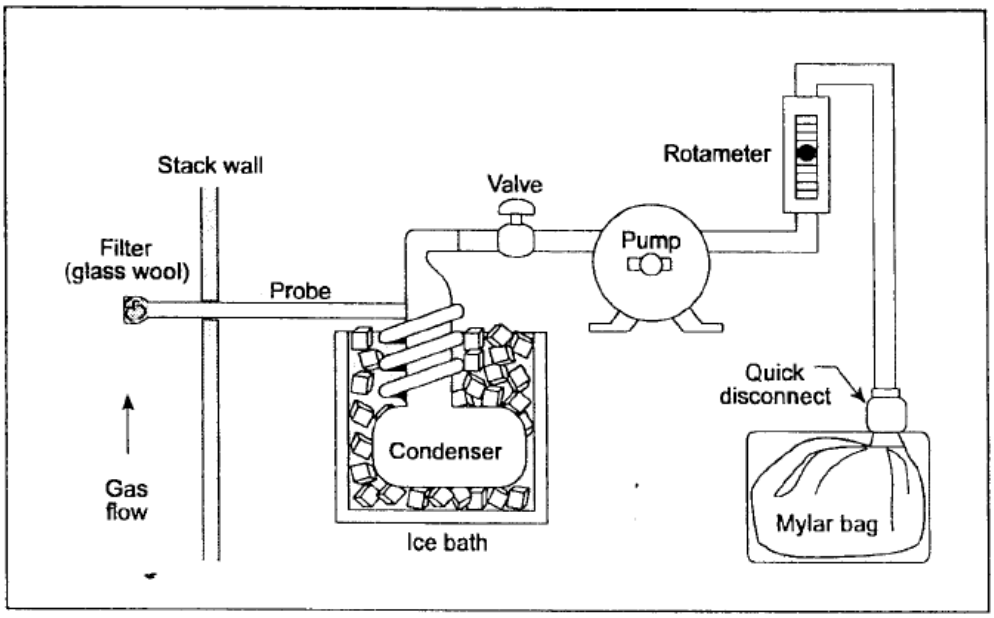

Figure 4-17. Integrated sampling.

During integrated sampling, the probe can be stationed at one point or moved to multiple points. If the percent oxygen or carbon dioxide is required for an F-factor emissions calculation, a multipoint integrated sample is required.

Today, the Orsat method has been largely supplanted by the use of analyzers, as **Method 3A** (http://www.epa.gov/ttn/emc/methods/method3a.html) allows the use of automated, instrumented techniques to determine the percentage of component flue gases. The instruments tend to be more accurate than the Orsat method since the ambiguities associated with proper technique are largely removed.
This method requires continuous or intermittent sampling of the effluent gas. Next, convey the

sample to an analyzer that measures the concentration of O_2 or CO_2. A requirement to meet performance requirements for this method is to validate the data.

The use of Method 3A may be required by specific New Source Performance Standards, Clean Air Marketing rules, State Implementation Plans and permits, where measurements of O_2 and CO_2 concentrations in stationary source emissions must be made, either to determine compliance with an applicable emission standard or to conduct performance testing of a continuous emission monitoring system (CEMS). Other regulations may also require the use of Method 3A.

Method 3B (http://www.epa.gov/ttn/emc/methods/method3b.html) is applicable for the determination of O_2, CO_2, and CO concentrations in the effluent from fossil-fuel combustion processes for use in excess air or emission rate correction factor calculations. A sample is extracted using either (1) single-point, grab sampling; (2) single-point, integrated sampling; or (3) multi-point, integrated sampling. The gas is then analyzed for percent CO_2, O_2 and if necessary CO using an Orsat combustion gas analyzer. The method includes formulas for percent excess air and fuel factor.

Method 3C (http://www.epa.gov/ttn/emc/methods/method3c.html) is used to determine CO_2, CH_4, N_2, and O_2 from stationary sources including municipal solid waste landfills. A sample is collected and injected into gas chromatograph (GC) and the CO_2, CH_4, N_2, and O_2 concentrations are determined by using a thermal conductivity detector (TCD) and integrator.

The EPA has also developed conditional test method (CTM) 034 for the determination of nitrogen oxides (NO and NO_2), carbon monoxide (CO) and oxygen (O_2) concentrations in controlled and uncontrolled emissions from combustion sources using fuels such as natural gas, propane, butane, and fuel oils. A gas sample is extracted from a stack and is conveyed to a portable electrochemical (EC) analyzer for determination of NO, NO_2, CO and O_2 gas concentrations. This method is not intended for use where an EPA reference test method is required.

4.6 METHOD 4: DETERMINATION OF THE MOISTURE CONTENT IN STACK GASES

Determining the moisture fraction, B_{ws}, is necessary in source sampling calculations. The pitot tube equation requires the wet molecular weight, M_s, and the isokinetic rate equation requires both the dry and wet molecular weights and the moisture fraction. The expression for the wet molecular weight is given in Eq. 4-7.

(Eq. 4-7) $$M_s = M_d\left(1 - B_{ws}\right) + 18B_{ws}$$

Where: M_s = Total stack or duct gas molecular weight
M_d = Dry stack or duct gas molecular weight
B_{ws} = Water vapor in the gas stream, proportion by volume

Method 4 (http://www.epa.gov/ttn/emc/methods/method4.html) has procedures for a reference method and approximation method to determine B_{ws}. The reference method is used for accurate determinations of moisture content. The approximation method provides estimates of percent moisture to aid in setting isokinetic sampling rates prior to a pollutant emission run. Both the reference and approximation method rely on condensation. By passing the flue gas through impingers submerged in an ice bath, the water condenses and collects in the impingers. The volume of water collected can then be measured using a graduated cylinder, or the water can be weighed. The moisture content is then determined by dividing the volume of water collected by the total volume of gas collected (wet + dry).

Alternative means for approximating the moisture content include:

1. Saturation pressure,
2. Psychrometry,
3. Adsorption, and
4. Stoichiometric calculations

At *saturation*, the gas is holding the maximum amount of water vapor possible for a given temperature. If the gas stream is saturated with water vapor, only a gas temperature measurement is necessary to determine the moisture content. This information is well documented and can be found in Table A-2 (saturated water vapor pressure) in the Student Guide.

If the gas stream is not saturated, a wet bulb–dry bulb technique can be used to estimate the moisture content, the same technique commonly used to determine relative humidity in ambient air. This *psychrometric technique* can be performed relatively easily by obtaining the wet bulb and dry bulb temperatures of the flue gas and then using a psychrometric chart or calculational methods to determine the moisture content. For example if the dry bulb temperature and wet bulb temperatures are 95°F and 70°F, respectively, the vapor pressure would be 0.48 inches Hg as shown in Figure 4-18. (Refer to http://www.uigi.com/UIGI_IP.PDF to see the chart in greater detail.) Water would begin to condense out (saturation point) at a dry bulb temperature of 55°F.

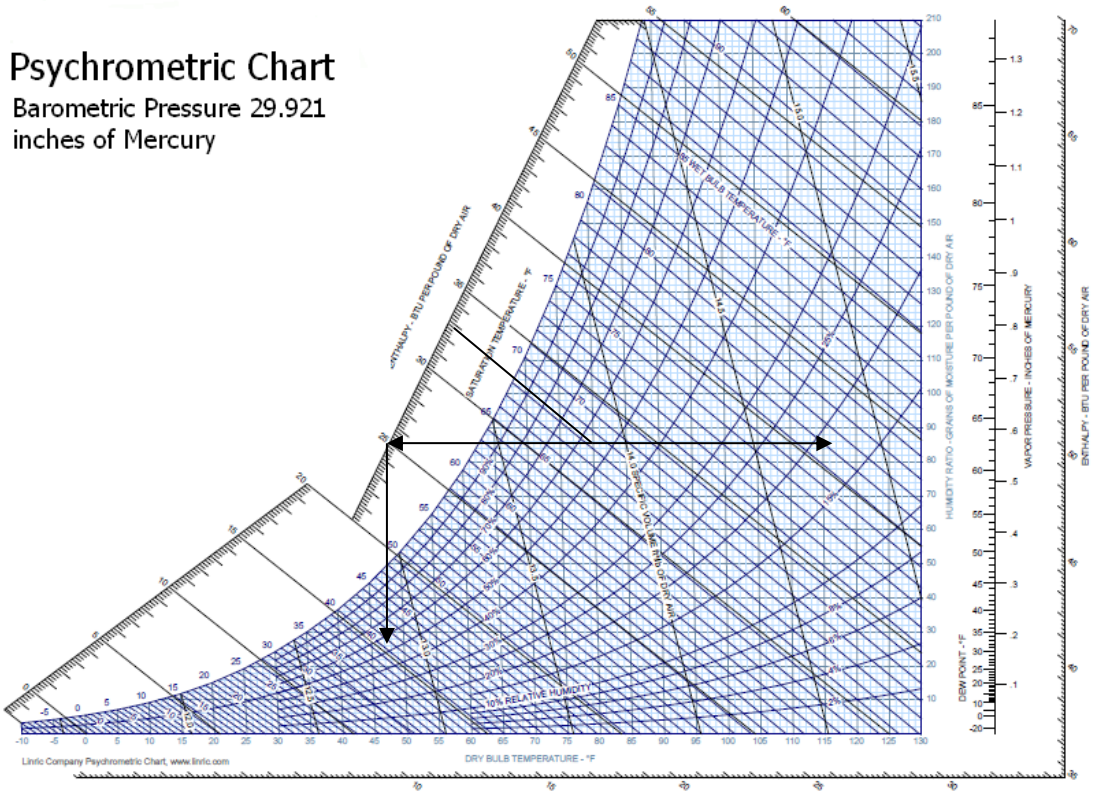

Figure 4-18. Psychrometric Chart.

Source: www.uigi.com/UIGI_IP.PDF

The adsorption method is used for low moisture concentrations and can be quite accurate. By using a solid that has a high affinity for water vapor, the water can be adsorbed. Weighing the tube after adsorption and comparing it to its dry weight will give the amount collected. The method works well as long as the tube does not become saturated with water and the vapor breaks through. Silica gel tubes are used in the last impinger of the Method 5 train to trap the last traces of moisture from the flue gas.

The stoichiometric calculation method can be used if the constituents of the fuel are known and analysis of the combustion gas O_2, N_2, CO_2, and if necessary CO content is available. The moisture content is determined by conducting a balance across the elements in the fuel and stack gases.

4.7 SUMMARY

THE FIRST FOUR REFERENCE METHODS

This chapter covered the following topics:

- Method 1: Number of traverse points.
- Method 2: Average gas velocity pressure (Δp_{avg}), pitot tube calibration coefficient (C_p). and absolute stack pressure (Ps).
- Method 3: Wet stack gas molecular weight (M_s).
- Method 4: Percent moisture of stack gas (B_{ws}).

BIBLIOGRAPHY

Jernigan, J.R. Three-dimension flow profile measurements for ascertaining acceptable flow rate monitor installation locations. *Continuous Emission Monitoring: A Technology for the '90s*. Air and Waste Management Association: Pittsburgh, 1993.

Knapp, K.T. The number of sampling points needed for representative source sampling. In *Proceedings of the Fourth National Conference on Energy and the Environment*; Theodore, L., Ed.; Dayton Section of the American Institute of Chemical Engineers: Dayton, 1976; 563-568.

Brooks, E.F.; Williams, R.L. *Flow and Gas Sampling Manual*; EPA-600/2-76-203; Environmental Protection Series; TRW Systems Group, U.S. Environmental Protection Agency, U.S. Government Printing Office: Washington, D.C., 1976.

Carpenter, J. H. *Fundamentals of Psychrometrics*; Carrier Corporation Technical Development Program, 1982.

Devorkin, H.; Chass, R. L; Fudurich, A. P. *Source Testing Manual*; County of Los Angeles Air Pollution Control District: Los Angeles, 1972.

Code of Federal Regulations, Appendix A of Part 60, Title 40, 1993.

CHAPTER 5

5.0 THE SOURCE TEST

5.1 OVERVIEW

PURPOSE

The purpose of this chapter is to introduce the Source Test, discuss its protocols, and review the phases and tasks in the process. A stack test, also referred to in EPA regulations as a performance or source test, measures the amount of a specific regulated pollutant, pollutants, or surrogates being emitted; demonstrates the capture efficiency of a capture system; or determines the destruction or removal efficiency of a control device used to reduce emissions at facilities subject to the emission regulations requirements.

INTRODUCTION

Source testing is a scientific experiment that requires an organized and methodical approach in order to achieve representative results. The source test is conducted to provide answers and valuable information in regards to the air emissions from a specific source. This requires that objectives be decided before starting the test and that the procedures and equipment be designed to aid in reaching those objectives. After the test is completed, the results should be evaluated to determine whether the test objectives have been met.

Figure 5-1 illustrates a Gantt bar chart that follows the progression of tasks performed when planning and conducting a successful source test. Some tasks may overlap while others can only begin when the previous task is completed.

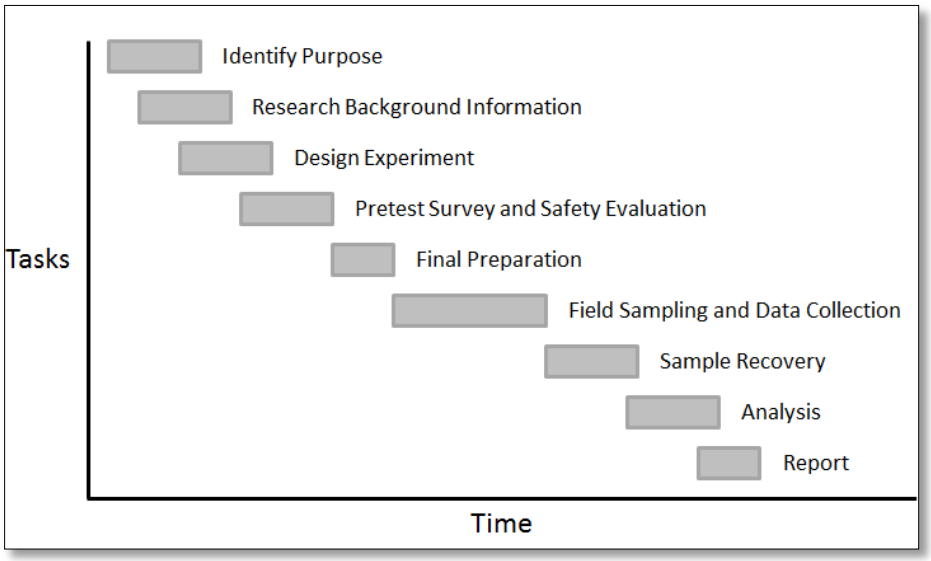

Figure 5-1. Task in planning and conducting a source test (Adapted from Brenchley, et.al in "Industrial Source Sampling" Ann Arbor Science 1973).

As discussed in Chapter 1, source testing is performed predominately to determine compliance with emission regulations (i.e., NSPS, NESHAP, MACT, or state and local limitations) and to provide information for evaluating control equipment efficiency. Stack testing may also be conducted for various purposes, such as relative accuracy test audits (RATAs), linearity checks, and routine calibration of continuous emission monitoring (CEM) equipment.

Agencies may request testing to assist in the development of regulations or emissions factors; to establish monitoring protocols for parametric monitoring under the Compliance Assurance Monitoring requirements of 40 CFR Part 64 or to develop and evaluate alternative test methods.

Facilities may conduct testing for their own purposes such as: optimizing process operations, for improving energy efficiency or to collect information for determining parameters prior to installation of air pollution control equipment.

Testing may also be conducted only to determine and demonstrate compliance with State Implementation Plan (SIP) requirements.

Figures 5-2 through 5-6 illustrate the four basic phases of a stack test. They are:

- Phase I: Establishing Test Objectives, Developing SOPs, Performing Pre-test Measurements and Finalizing Test Protocols;
- Phase II: Equipment and Chemical Preparation;
- Phase III: The Source Test; and
- Phase IV: Sample Cleanup, Analysis, Calculations and Report Writing.

5.2 PHASE I: OBJECTIVES AND PROTOCOLS

ESTABLISHING TEST OBJECTIVES AND PROTOCOLS

As illustrated in Figure 5-2, Phase I involves establishing test objectives, developing SOPs, performing pre-test measurements, and finalizing test protocols.

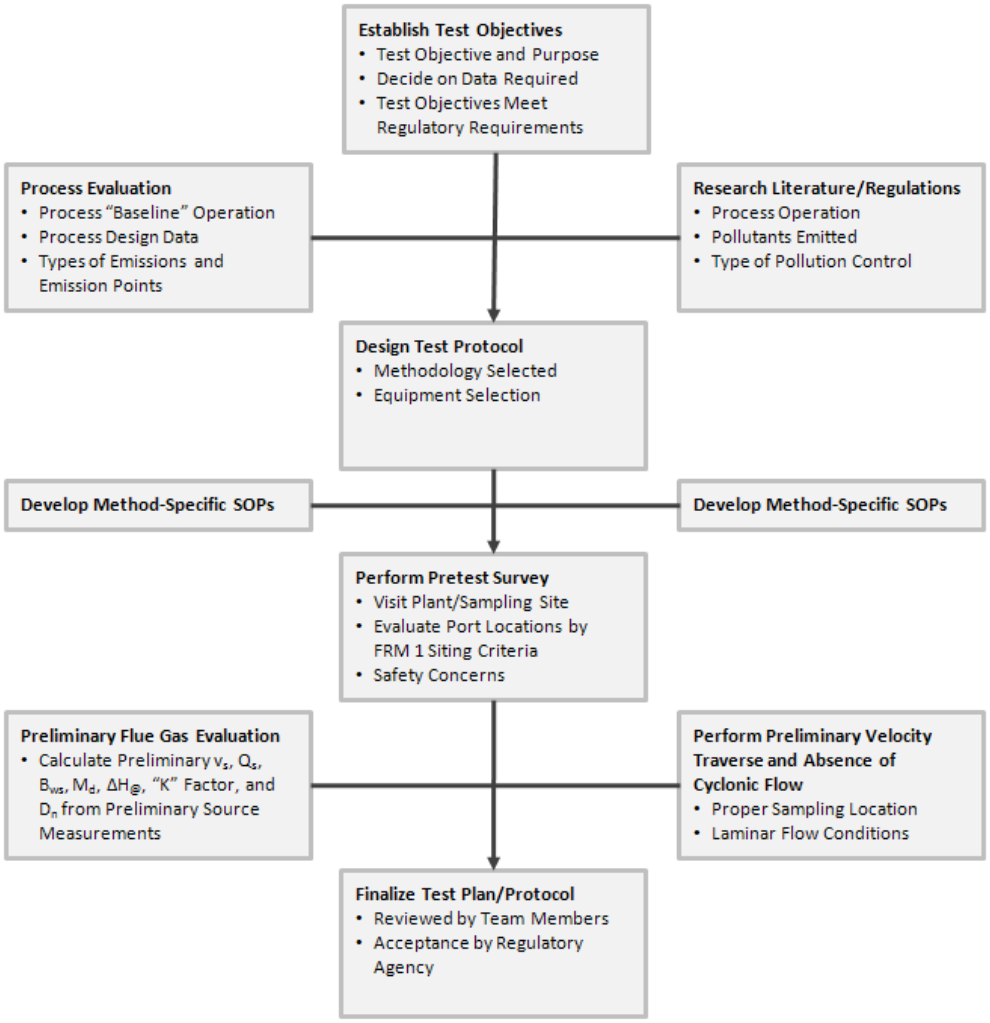

Figure 5-2. Phase I: Establishing Test Objectives, Developing SOPs, Performing Pre-test Measurements and Finalizing Test Protocols.

As discussed earlier, source testing is used to determine compliance with emissions regulations and to provide information useful for evaluating control equipment efficiency or design, process economics, or process control effectiveness. Valid source sampling studies, therefore, yield valuable information to both the environmental control agency and to industry.

Before one can perform a test, one has to establish the purpose of the test. Establishing the purpose helps to identify the needed test methodology, process evaluation and design data needs, and helps to finalize sampling approach. A thorough review of available literature (www.epa.gov, then click on EMC) provides information involving:

- Basic process operation;
- Type of pollutant emitted from process;
- Physical state of pollutant at source conditions;

- Probable points of emission from process; and
- Problems to expect and estimates of variables (e.g., H_2O vapor, stack temperature and pressure, pollutant concentration etc.).

After all this information is acquired, the design of the stack test and test protocol can be accomplished. The design of the stack test and test protocol would identify:

- Sampling and analytical approach;
- Equipment needs to meet test objectives;
- Manpower needs and time requirements for testing;
- Physical arrangements at sampling location (i.e., hotels, restaurants, site testing location and accessibility, port location [drawings, photographs or blueprints], electrical power availability, safety requirements etc.); and
- Variations between selected sampling approach and experiment design.

PRE-TEST SURVEY ACTIVITIES

The most important part of Phase I is the pre-test survey activities through a facility site visit. With the pre-test survey it will be less likely to overlook critical sampling and safety factors. During the site visit any anticipated and pertinent question or issues can be brought up with plant personnel to determine proper solutions.

It is also helpful to develop a checklist of important information needed to successfully and safely conduct the source test. It is also a good idea to have a camera to take pictures of the sampling site. At the end of the visit any pictures should be reviewed and shared with plant personnel to discuss any specific issues and to show them that only pictures pertinent to the sampling were taken.

The pre-test survey should include a complete description of all process operation information such as:

- Process flow diagrams;
- Operating process procedures, operating conditions and schedules;
- Control equipment operation and schedule; and
- Geometry and physical layout of sampling ports/location.

This information will aid in confirming if the selected sampling strategy will adequately determine the pollutant concentrations and emission rates. Information on the operation any air pollution control devices and ancillary equipment (i.e., hoods, ductwork, cooling units, heat exchangers, etc.) should be obtained to determine their optimal and applicable operating efficiency. Also, any process or control device monitors should be investigated in order to gather recorded data information during source testing. This data would also be useful for reproducing the process or control device conditions for any additional repeated source testing.

Additional items to include in the pre-test survey are the proper site selection, accessibility to the site location along with logistics and measurements, and location of safety hazards. Site selection should not only address proper upstream and downstream diameters, but also to

ascertain the existence of duct or stack obstructions, adequacy of room for equipment and for safe operation of equipment. Marked drawings or sketches should be made and distributed to the personnel performing the work.

Logistic considerations include shipping equipment, elevators, use of on-site laboratories and its resources, availability of electrical power with a check of voltage and amperage requirements, and adequacy of supporting sampling equipment for traverses. It is very important in the pre-test survey to verify that the sampling ports are of proper diameter and that availability of attaching a monorail system to the stack has been adequately addressed. Figures 5-3, 5-4, and 5-5 document the proper clearance zone, orientation and construction requirements for hardware associated with the monorail system which supports the Federal Reference Method 5 sampling train at the stack porthole. It is important to keep in mind that the distance from the probe to the bottom of the sample case is about 13.5 in. This means that in order for the tester to traverse the stack, the guardrails must be no higher than 13.5 in. or else cutting a portion of the guardrail system would have to be made in order to allow passing of the probe/filter/impinge system through to complete traversing the stack, as illustrated in Figure 5-5.

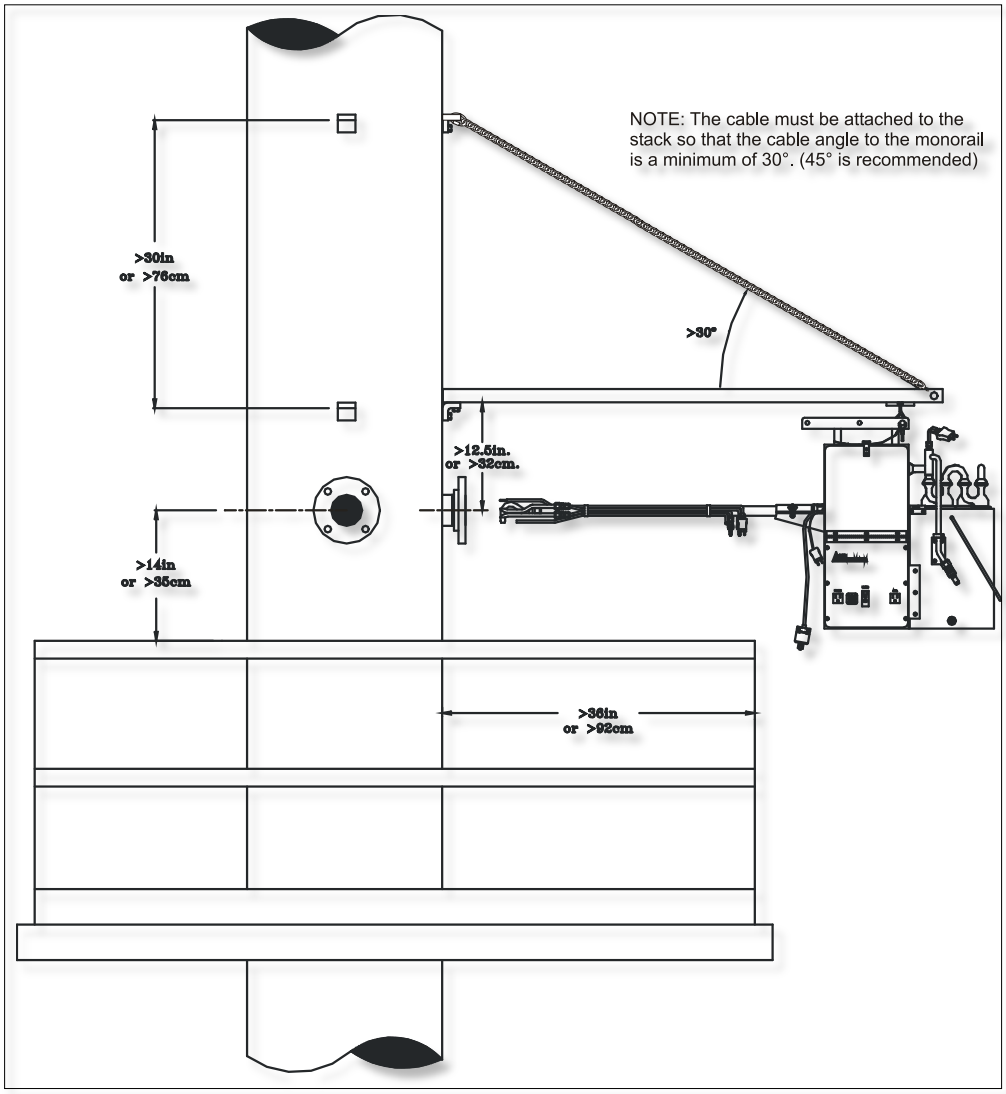

Figure 5-3. Required clearance zones at stack for Federal Reference Method 5 sampling train.

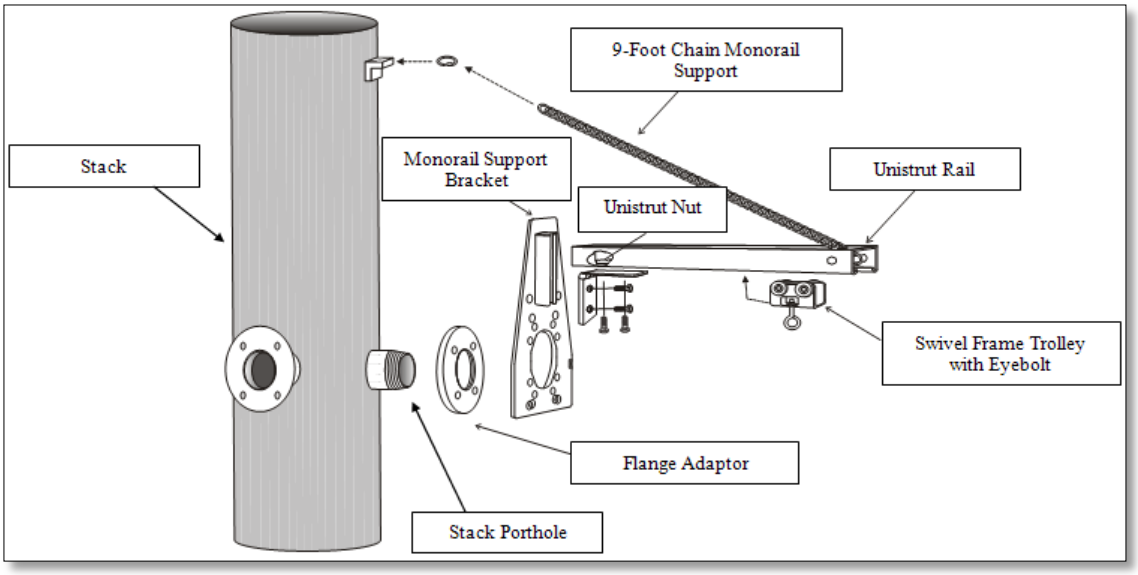

Figure 5-4. Illustration of monomount monorail system to support Federal Reference Method 5 sampling train.

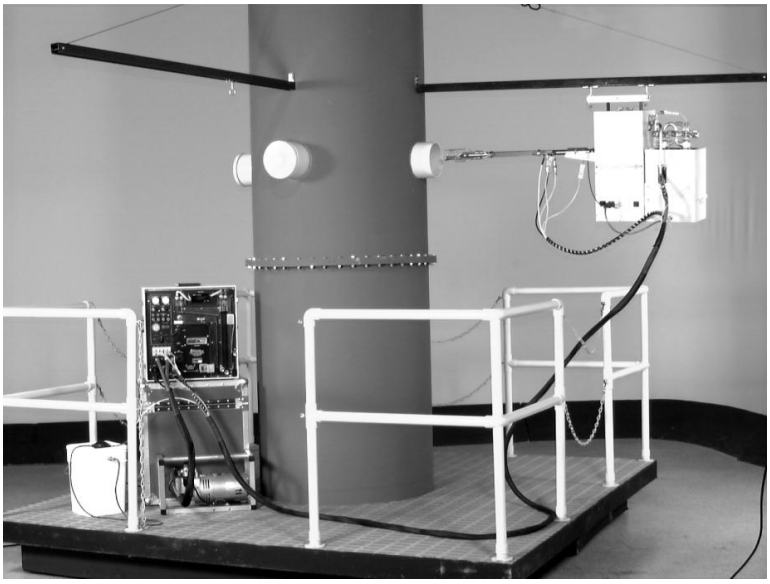

Figure 5-5. Properly constructed monorail support system and required clearance zones for traversing stack during stack test.

Other gathered information associated with the pre-test survey should include locations of restrooms and vending machines, availability of sampling equipment staging area along with clean sample recovery area should be identified. In addition, possible sources of ice both on

and off-site.

The pre-test survey should include several preliminary stack gas measurements. Measurements can include, but not limited to:

- Stack geometry and upstream/downstream measurements utilizing Method 1 guidance;
- Verification of absence of cyclonic flow utilizing Method 1 guidance;
- Approximate stack gas moisture determination utilizing Method 4 (i.e., wet bulb/dry bulb, nomograph or psychrometric charts);
- Stack gas preliminary velocity traverse, stack gas velocity (v_s), volumetric flow rate (Q_s), stack gas temperature (T_s) and stack gas static pressure (p_g) measurements utilizing Method 2; and
- Approximate stack gas oxygen (O_2) and carbon dioxide (CO_2) content utilizing Method 3.

Table 5-1 identifies the preliminary measurements needed in order for isokinetic sampling to be performed along with where to obtain these pre-test measurements.

Table 5-1. Preliminary measurements taken during pre-test survey to establish isokinetic sampling utilizing Federal Reference Method 5 sampling train.

No.	Symbol	Value Needed	Obtain from
1.	$\left(\sqrt{\Delta p}\right)_{avg}$	Average stack gas velocity pressure head	• On-site measurement using portable Type-S pitot tube • A previous test (often erroneous)
2.	P_s	Stack gas pressure	• On-site measurement using plant static pressure tap • On-site measurement using Type-S pitot tube • A previous test (very small error)
3.	P_m	Dry gas meter pressure	• Same as on-site barometric pressure
4.	B_{ws}	Stack gas moisture fraction	• On-site measurement using wet bulb/dry buld, psychrometric charts, saturation, condensation, adsorption, or stiochiometric vapor pressure technique • A previous test (often erroneous)
5.	T_s	Average stack gas temperature	• On-site measurement using portable calibrated thermocouple • A previous test (often erroneous)

6.	T_m	Average dry gas meter temperature	• Meter temperature rises above ambient because of pump heat and is typically estimated at 14°C (25°F) above ambient
7.	M_d	Stack gas dry molecular weight	• On-site measurement of O_2 and CO_2 utilizing portable instrumentation • A previous test (very small error)
8.	$\Delta H_@$	Orifice meter calibration factor	• Determined previously from laboratory calibration using calibrated orifices

Measurements of approximate stack velocity and moisture will aid in the determining the existence of very low or very high velocities and water vapor content so special procedure can be implemented in the final test protocol. Knowledge of the high stack gas temperatures is important to determine if the use of water-cooled or high temperature probe material construction is necessary. Finally, the on-site measurement performed in the pre-test survey helps the tester to perform preliminary calculations associated with proper selection of nozzle diameter (D_n) and determination of "k" factor for maintaining isokinetic rate conditions ($\Delta H = k\Delta p$) during the compliance test.

Once the test objectives have been established, the literature researched, determination of applicability of the regulations to the source, and the pre-test survey completed, one can finalize the test protocol. A well-designed test protocol/plan addresses sampling equipment, techniques, and analysis in an integrated procedure designed to meet the test objective. The source test must be based on a sampling technique that can collect the required data. The sampling equipment is then designed to facilitate the sampling procedure. After the sampling has been conducted, the analysis of the sample must be considered as an integral factor in the overall test design.

As illustrated in Figure 5-2, developing a source test plan requires knowledge of sampling procedures, and an understanding of the process operations at the facility being tested. The test plan clearly defines all aspects of the test program, and incorporates work done during pre-survey or other preliminary research studies. All aspects of this test plan, from the statement of objectives through analysis of the sample and results of the sampling, should be organized into a unified program. This program is then reviewed by the industrial or regulatory personnel involved. The protocol for the entire test procedure should be understood and agreed upon prior to the start of the test. A well-organized test protocol saves time and prevents confusion as the work progresses. The goal of most source tests is to measure a number of stack gas variables that are used in evaluating emissions source characteristics. The test plan should be developed using techniques and equipment specifically designed to provide complete and valid data relating to test objective. Approaching the study in this manner increases the possibility of obtaining a representative sampling of the source parameters evaluated.

At a minimum, the finalized test protocol developed under Phase I should contain the following information:

- Company name, contact and phone number;

- Source being sampled;
- Emission points being tested;
- Consultant testing company;
- Regulations requiring sampling and pollutants requiring testing;
- Proposed sampling dates, test schedule, sampling methods and any deviations from the selected standard sampling methods;
- Design, normal, and maximum operating level of source and pollution control equipment;
- Operating parameters to be monitored during testing;
- Drawing of stack with location of ports and CEMS (if applicable);
- How results will be calculated/reported; and
- Standard Operating Procedures (SOPs) and quality assurance plans/procedures.

5.3 PHASE II: EQUIPMENT AND CHEMICAL PREPARATION

OVERVIEW

The next step in the source test program is to prepare the equipment and chemicals for the test, as illustrated in Figure 5-6. The test equipment must be assembled and checked in advance. It should be calibrated following procedures specified in the Code of Federal Regulations (CFR), Title 40, Part 60, Appendix A, Federal Reference Methods 1 through 5. In these preparations, the entire sampling system should be assembled as intended for use during the sampling experiment. This ensures proper operation of all the components and points out possible problems that may require special attention during the test. This procedure will assist in making preparations and planning for spare parts. The equipment should then be carefully packed for shipment to the sampling site.

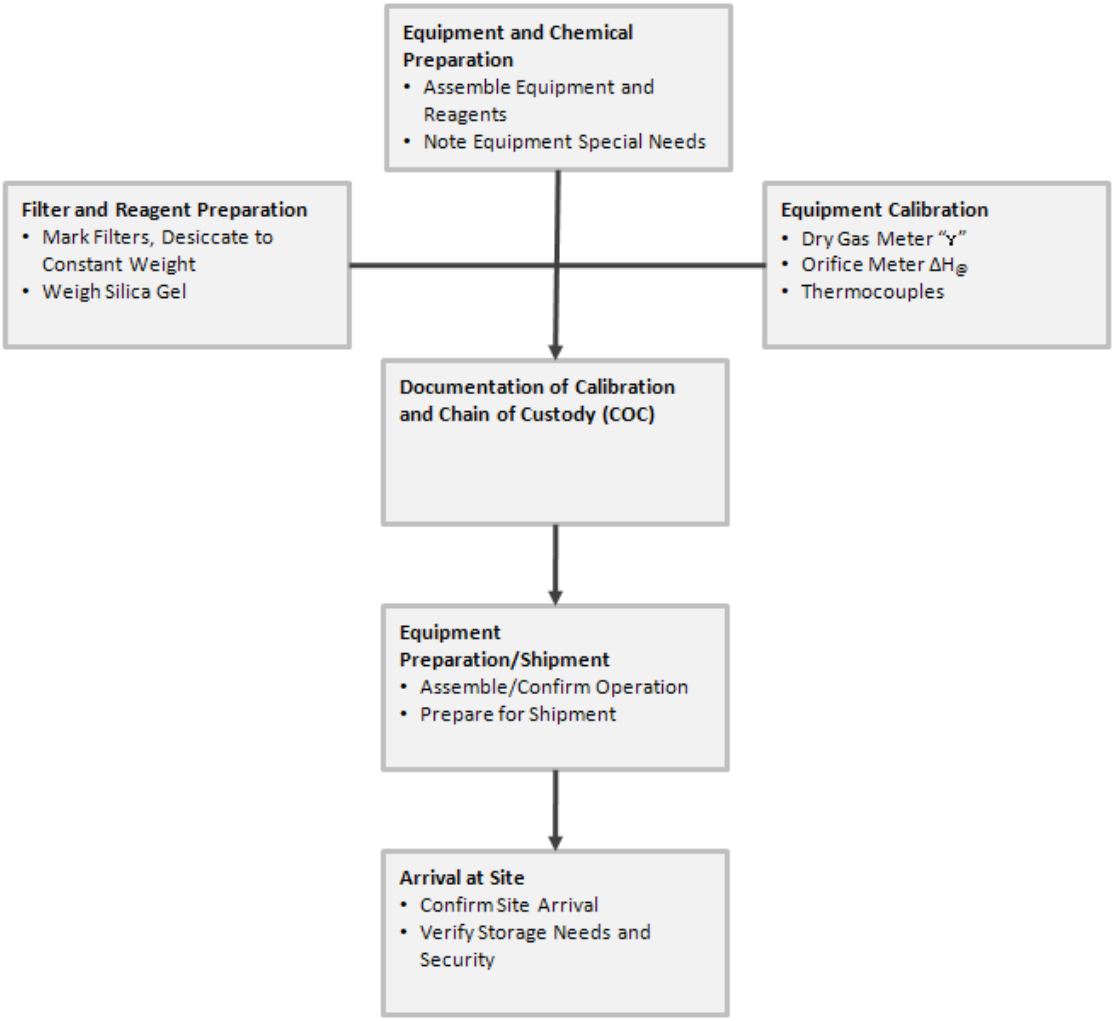

Figure 5-6. Phase II: Equipment and Chemical Preparation.

As discussed in Chapter 3, and illustrated in Figure 5-7, the Federal Reference Method 5 sampling train is composed of three (3) components: the probe assembly, the filter/impinge assembly, and the meter box and pump assembly.

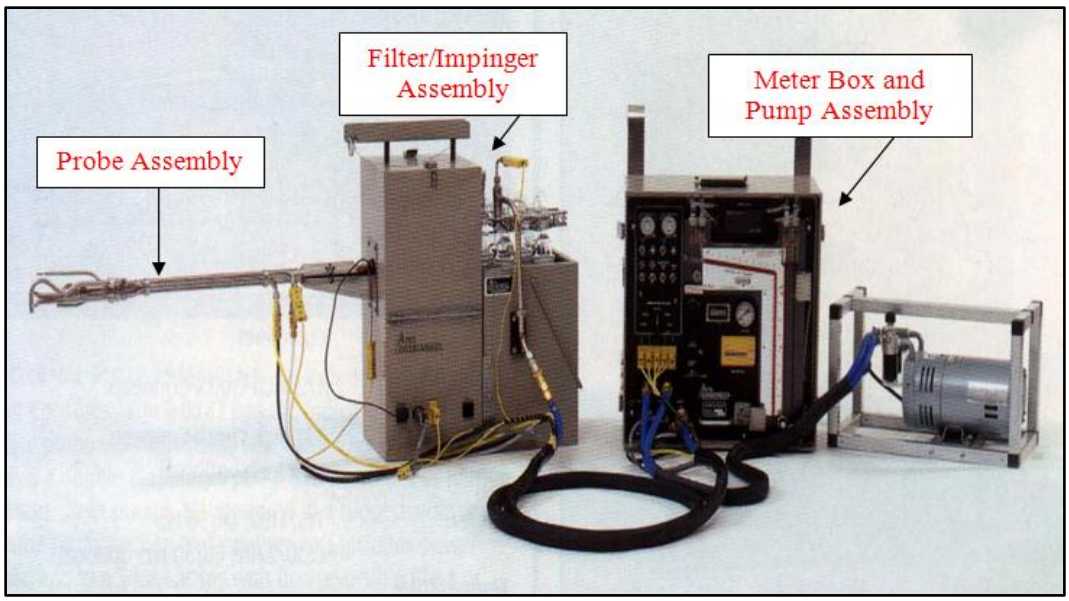

Figure 5-7. Method 5 sampling train.

Each assembly contains various measurement components that must be calibrated. Test results from a stack emission test are meaningless without calibration of the equipment components. The creation and maintenance of a regularly scheduled calibration and record keeping program are critical to conducting any stack testing program. Without calibration, sampling cannot be verified as having been conducted isokinetically.

The results of a particulate sampling test cannot be checked for accuracy because no independent technique or test atmosphere exists to provide a standard or known particle concentration. Collaborative testing conducted by the USEPA has determined that the interlaboratory standard deviation is ±12.1%. Only through careful calibration, maintenance, and record keeping can the stack tester ensure that the data collected during the stack test program are representative of particle concentrations and mass emission rate. Chapter 7, Topics in Source Test Quality Assurance, covers the step-by-step procedures for performing the various calibration procedures associated with the Method 5 sampling train components.

Components of the Method 5 particulate sampling system which require calibration are:

<u>Probe Assembly</u>

- Sampling nozzle;
- Probe heater assembly;
- Pitot tube and pitot tube orientation to nozzle; and
- Stack gas and probe thermocouples.

<u>Filter/Impinger Assembly</u>

- Filter box heater system; and
- Filter and exit impinge thermocouples.

Meter Box and Pump Assembly

- Dry gas meter "Y" factor;
- Orifice meter "ΔH@" factor; and
- Dry gas meter thermocouples.

Table 5-2 presents a summary of the calibrations required, equipment used for calibration, acceptance limits, calibration frequency and actions required if calibration fails to meet acceptance limits.

As part of Phase II, all calibration sheets and documentation should be keep in a secure location for future review and compliance application. A copy of the calibration sheets may be put into a folder or three-ring binder and shipped to the site with the equipment.

Finally, as part of Phase II, a "Chain-of-Custody (COC)" form should be developed to accompany all equipment and reagents to the field. COC documentation should be used for all samples and data sheets. For future litigation, the rule of evidence requires impeccable and traceable identification of all samples and calibrated components as part of the Method 5 compliance test.

After all components have been calibrated, the equipment should be assembled and checked in advance of shipment to the site. All equipment should be inspected and be in good working conditions.

SAMPLE CASE PREPARATIONS

The sample case should be cleaned and checked thoroughly for needed repairs. All handles, brackets, clamps, and electrical connections must be inspected. Insulation in both the hot and cold areas must be in good condition. The sample case should not leak water from the melting ice into the filter heating compartment. The impinger section should have protective foam padding on the bottom and a good drainage system. The drain plug should be clean.

Table 5-2. Sampling system equipment calibration and frequency.

Component	Calibrated Against	Acceptance Limits	Frequency	Action If Unacceptable
Dry Gas Meter Initial 5-point	Wet Test Meter Secondary Reference DGM Critical Orifices	$Y_i = Y \pm 0.05Y$	Semiannually	Recalibrate, repair, or replace
Post-test 3-point	Wet Test Meter Reference DGM Critical Orifices	$Y = Y \pm 0.05Y_{avg}$	After each field test	Recalibrate at 5-points
Orifice Tube	Measured during DGM calibration	$\Delta H_@$=46.7±6.4mm H_2O (1.84±0.25 in. H_2O)	With DGM	Repair or replace

Thermocouples & Digital Indicator	Certified Hg-in-glass thermometer in ice slush and boiling water	Stack: ±1.5% °K DGM: ±3 °C Probe: ±3 °C Filter: ±3 °C Exit: ±1 °C	After each field test	Recalibrate, repair, or replace
Pitot Tube	1. Standard pitot tube in wind tunnel and calculate C_p	If part of Probe Assembly, calibrate with assembly. $\sigma \leq 0.001$ for side A and side B	Quarterly, or after each field test	Recalibrate, repair, or replace
	2. Measure with angle indicator to demonstrate meeting geometry specifications and assign C_p=0.84	α_1 ±10° α_2 ±10° β_1 ±5° β_2 ±5° Z = ≤ 0.125” W = ≤0.031” P_A - P_B ≤ 0.063” 0.188”≤D_T≤0.375”	Quarterly, or after each field test	Recalibrate, repair, or replace
Sampling Nozzles	Micrometer with at least 0.025 mm (0.001 in.) scale	Average of three inner diameter measurements; ΔD ±0.1 mm (0.004 in.)	Before each field use	Recalibrate, reshape, or re-sharpen when dented or corroded
Prove and Filer Box Heater System	Gas thermocouple	Capable of maintaining 120°C ±14°C at 20-lpm flow rate	Initially	Repair or replace, and verify calibration

Calibrate the heater in the filter compartment to maintain a temperature around the filter of 120° ± 14°C (248° ± 25°F) or at other temperatures as specified in the Subparts of Title 40 of the Code of Federal Regulations. This calibration should be performed at several conditions (to account for seasonal weather changes) so that the filter compartment temperature can be maintained at the proper level at all times. Often during sampling, the filter section is not easy to see; consequently, the filter temperature is difficult to monitor accurately. If the case is calibrated for several conditions, operators can control the temperature more closely.

All glassware, including the filter holder and frit, should be disassembled and cleaned. Individual glass pieces should be separated and checked for breaks or cracks. Pieces needing repair are cleaned after repairs have been made. A thorough glass cleaning for simple Method 5 testing is done with soap and water followed by a distilled water rinse. If analytical work is to be performed on the sample water condensed, clean the glassware by soaking in a methanol-basic hydroxide (NaOH or KOH) solution with pH 9. Glass should be left in the base solution until any stains can be easily washed away, but not longer than 48 hours since the solution can etch the glass. The basic solution should be rinsed away with distilled water. If ball-joint glassware is used, remove the embedded O-rings before cleaning with heptane, hexane, or another suitable solvent. Clean the glass frit by pulling several aliquots of nitric acid (HNO_3)

through the glass frit with a vacuum pump. It should be rinsed at least three times with distilled water and dried before using. The rubber gasket surrounding the frit should be cleaned, removing any particles embedded in the rubber, which could prevent proper sealing. The frit and gasket must be constructed such that the glass filter mat does not become compressed in the sealing area. After cleaning, re-install the O-rings associated with the impingers.

SAMPLING PROBE AND NOZZLE PREPARATION

A thorough probe check before a test helps prevent field problems. The sampling probe should be thoroughly inspected before field use. Remove the glass probe liner by loosening the union at the end of the probe. Completely disassemble the probe union and seal gasket, and inspect all the individual components. Verify proper probe liner material has been selected for the estimated stack gas temperature, as illustrated in Table 5-3.

Table 5-3. Maximum stack gas temperatures for probe liner materials.

Material	Maximum Temperature
Teflon® Liners and Fittings	177°C (350°F)
Mineral-Filled Teflon® Fittings	315°C (600°F)
Borosilicate Glass Liners	480°C (900°F)
Stainless Steel Liners	650°C (1200°F)
Quartz Liners	900°C (1650°F)
Inconel or Hastelloy Liners	980°C (1800°F)

Once the proper probe liner material has been selected, install the probe liner into the probe sheath. Secure in place utilizing an O-ring and backer ring by attaching the 5/8 union to the probe sheath, as illustrated in Figure 5-8. Finally, connect the selected sample nozzle to the 5/8 union making use of the tube nut and ferrule.

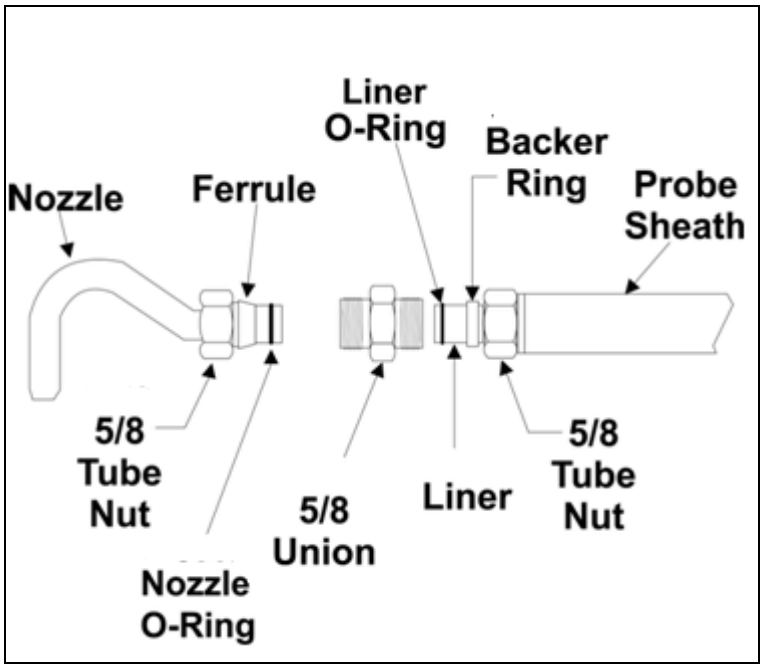

Figure 5-8. Installation of the probe sheath, 5/8 union and probe nozzle connectors.

PROBE SHEATH AND PITOT TUBES

The stainless steel probe sheath should have a small hole drilled near the end of the probe. This prevents a pressure differential inside the sheath from possibly diluting the sample with air drawn down the probe. If the hole is not there, the probe end (fitted into the sample case) should be sealed airtight. Check the weld at the swagelok fittings for cracks and repair if necessary. Similar to the probe liners, the material of construction for the probe sheath has temperature limitations. As illustrated in Table 5-4, verify the proper selection of material construction for the probe sheath for the expected temperature of the stack gas being sampled.

Table 5-4. Probe sheath temperature ranges.

Probe Assembly Configuration	Maximum Temperature
Stainless Steel Sheath and Glass Liner	480°C (900°F)
Stainless Steel Sheath and Liner	650°C (1200°F)
Inconel or Hastelloy Sheath and Liner	980°C (1800°F)
Inconel or Hastelloy Sheath and Quartz Liner	980°C (1800°F)

Inspect the pitot tubes for damage and proper construction details (see the Pitot Tube Calibration Section). Pitot tubes should be cleaned, checked for cracks or breaks, and securely fastened to the probe sheath to prevent accidental misalignment in the stack. All pitot tubes and components must be leak-tested.

Examine the union and seal gasket for wear. A stainless steel ring should be included in the union-gasket configuration for good compression and an airtight seal. If a rubber O-ring gasket

is used (stack temperatures ≤ 350°F), it should be inspected for wear and replaced if necessary. Asbestos string gaskets must be replaced each time the union-gasket is disassembled. After inspecting the glass liner-heating element, reassemble the probe in the following manner to prevent leaks:

1. Insert glass liner through probe and swage nut.
2. Place stainless steel ring over glass with flat side facing out.
3. Fit gasket over glass liner and push onto steel ring.
4. Align glass liner end with edge of swage nut closest to pitot tube orifice openings.
5. Screw the union on finger tight.
6. Use probe wrenches to tighten the union. If too much tightening is done here, the end of the glass liner will break.

GLASS LINER - HEATING ELEMENT

The glass liner should be thoroughly cleaned with a probe brush, acetone, and distilled water. If it will not come clean in this manner, it should be cleaned with dilute hydrochloric acid (HCl) or replaced. The glass liner-heating element in many sampling probes can't be separated, making thorough cleaning difficult. An easily separated liner-heater is a great advantage.

The heating element should be checked for good electrical insulation. The insulation on a frequently used probe liner-heating element will eventually be worn or burned away. This can expose frayed wires, which may short against the probe sheath. These hazards can be avoided with careful inspections and repair.

After thorough inspection, check the heating element in the reassembled probe. This procedure is helpful in finding problems before arrival at the sampling site. Attention should be given to the function of the electrical system and wrappings around the glass liner. These wrappings help prevent electrical shorts against the probe sheath while minimizing glass liner flexing that can cause a liner break or electrical short.

The Method 5 sampling train requires well identified, precut, glass mat filters that have been desiccated to a constant weight. Tare weights must be recorded to ensure against errors. Each filter should be inspected for pinholes that could allow particles to pass through. The orientation of the filters when placed into the filter assembly is very important. As illustrated in Figure 5-9, the rough side of the filter should be orientated toward the inlet of the gas stream while the smooth side of the filter should be positioned against the Teflon® frit. It is also important to place the inlet side of the frit facing the incoming gas stream.

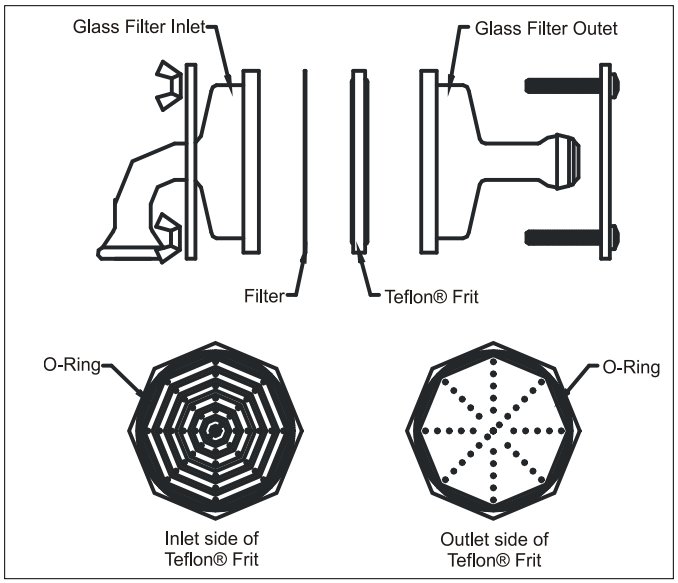

Figure 5-9. Filter into filter assembly.

The proper preparation of reagents is also an important pretest activity. The acetone (or other reagent) used to clean sampling equipment must be a low-residue, high-purity solvent and should be stored in glass containers. Silica gel desiccant should be dried at 250° to 300°F for two hours, then stored in airtight containers. It is a good procedure to use glass-distilled, deionized water in the impingers. Any other reagents should be carefully prepared.

All pertinent data on the reagents, tare weights, and volumes should be recorded and filed in the laboratory. Duplicates of this information should be provided for the sampling team leader.

5.4 Phase III: The Source Test

Introduction

The first step in performing the source test is to establish communication among all parties involved in the test program through a pre-test meeting. All aspects of the plant operation and the test should be reviewed and understood by those involved. The proper plant operating parameters and test procedures should be recorded in a test log for future reference.

Figure 5-10 outlines the on-site activities associated with the source test.

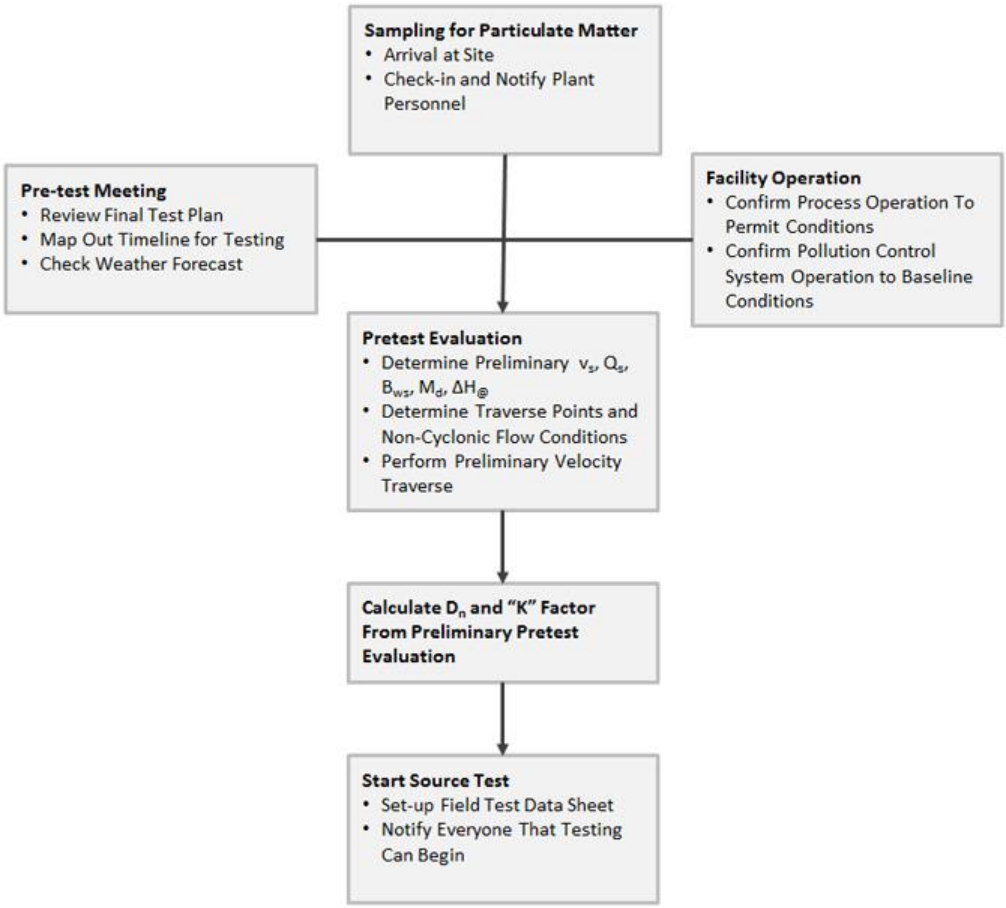

Figure 5-10. Phase III, The Source Test. Pre-test Meeting and Pre-test Evaluation Preparation for Source Test.

PRE-TEST MEETING

Before testing begins, the Agency Observer, the test team leader, and a plant representative with process control authority should meet to finalize the sampling plans, establish baseline conditions of the process and the control equipment, and coordinate the testing schedule. At the meeting the test protocol will be finalized and agreed upon by all parties. A pre-test checklist should be used to organize the meeting and ensure that all pertinent areas are discussed. An example checklist is presented at the end of this Chapter. The pre-test checklist should include information associated with, but not limited to:

- Plant name, address, plant representative, sources to be tested, agency representative, test team company name, and address;
- Name, affiliation, phone number, and email address of pre-test participants;
- Facility operation including process description, process parameters to be monitored, control device, and its operating parameters;
- Testing methodology to be employed, including description of methodology, pollutant parameters to be tested, quality assurance/quality control (QA/QC) activities employed, review of mandatory calibration sheets, and statement of deviations from prescribed reference methods;

- Testing site location, including diagram of sampling location, discussion of meeting Method 1 siting requirements, cyclonic flow check verification, preliminary pre-test stack test data, and information associated with determination of nozzle diameter and K factor for establishing isokinetic rate conditions; and
- Present plant operating schedule and safety concerns and requirements.

The Agency Observer should know the exact sampling procedures to be used, the minimum data requirements, and the prescribed conditions of the process and control equipment requirements as identified in the source permit. Everyone at the pre-test meeting should know the requirements for a valid test. In addition, the Agency Observer and plant representative should know what process parameters will be recorded, the intervals of data collection, and the raw materials that will be used during the test. All should know and understand what conditions constitute an invalid test. Because the Agency Observer will have authority for approval or disapproval of the compliance test, he must ensure that all aspects of the test protocol are clearly understood. Therefore, execution of the compliance test in accordance with the established protocol should constitute a valid test.

Because some processes are relatively simple, a pretest meeting on the morning of the test may be adequate to ensure complete understanding among all parties involved. However, it is the responsibility of the Agency Observer to ensure that all parties involved know and understand the details of the test procedures in order to constitute a valid test.

PRELIMINARY TESTS EVALUATION AND CALCULATING THE NOZZLE DIAMETER AND THE K FACTOR

As illustrated in Figure 5-11, operation of the Federal Reference Method 5 sampling train may begin after performing preliminary stack gas characteristics to validate the pre-test calculations of D_n and K-factors. Before assembling the Method 5 apparatus, the source tester must first select a nozzle of proper size and calculate the K factor in the isokinetic rate equation, as identified in Figure 5-10. Source variables used in solving the nozzle diameter and isokinetic rate equations should be determined. These equations may be solved using a simple calculator. Historically, the tester would use a nomograph or a source sampling slide rule.

Figure 5-11. Phase III, The Test: Operation of the Federal Reference Method 5 Sampling Train.

The principal variables that need to be determined are stack gas moisture content, average gas velocity pressure (Δp), stack gas temperature, and estimated average dry gas meter temperature. The stack gas moisture can be determined by Method 4 sampling or estimated with a wet bulb-dry bulb thermometer technique. The average Δp and stack gas temperature are determined by a preliminary stack traverse. The dry gas meter average temperature can be estimated to be 10°C (25°-30°F) greater than the ambient temperature at the site. These values are then used to find D_n and the K factor.

From Chapter 3, the nozzle diameter equation is:

$$D_n = \sqrt{\frac{0.0358 Q_m P_m}{T_m C_p} \frac{1}{(1 - B_{ws})} \sqrt{\frac{T_s M_s}{P_s \Delta p_{avg}}}}$$

Where: Q_m can be taken at 0.75 cfm or any other desired flow rate.

Once D_n is calculated, the source tester should select the nozzle in his/her toolbox that has a value closest to that calculated. Typically, button-hook nozzles are made from a variety of different materials. A range of nozzle sizes is required for conducting isokinetic sampling. As we have learned, the size is dependent upon the stack gas velocity (and other parameters) and the material of construction is dependent upon the stack temperature. The most popular nozzles are constructed from seamless 316 stainless steel and can optionally be coated with Teflon®. Other nozzle materials include borosilicate glass, inconel alloy 600 and quartz. Standard sampling nozzles are 4 inches long and have a 5/8 inch OD shank for attaching to the probe union. Nozzle sets sold by various manufacturers include a selection of the most commonly used sizes, ranging from 1/8 inch to ½ inch. A nozzle set usually includes seven (7) nozzles in 1/16 increments, as illustrated in Figure 5-12.

Figure 5-12. Typical commercially available seven (7) piece stainless steel nozzle set.

After the nozzle is selected from the nozzle set, the nozzle diameter is determined with a caliper. The calibrated value of D_n is then substituted into the isokinetic rate equation:

$$\Delta H = \left[\underbrace{846.72\, D_n^4 \Delta H_@ C_p^2 (1 - B_{ws})^2 \frac{M_d}{M_s} \frac{T_m}{T_s} \frac{P_s}{P_m}}_{K} \right] \Delta p$$

Note: Most of the variables in the nozzle diameter and the isokinetic rate equation are known prior to sampling or can be closely estimated. Often, the solution to the equation can be partially calculated before the sampling with the few remaining variables inserted and the equation quickly solved on site.

The solution of the isokinetic rate equation using a calculator or computer, allows the tester to quickly and easily adjust the sampling rate for changes in the stack gas variables.

SAMPLE CASE PREPARATIONS AT THE SAMPLING SITE

As illustrated in Figure 5-11, the sample case is readied for sampling by filling the impingers with water and silica gel. Impingers 1 and 2 are each filled with 100 ml of water by inserting a funnel in the side arm and slowly pouring in the water. This makes it easy to displace air in the impinger and keeps the water from filling the bubbler tube. The third impinger is left dry. The fourth impinger is filled with 200-300 gm of preweighed silica gel. The silica gel must be added through the side arm. This prevents dust from collecting on greased ball joints or silica gel from being pulled up the center tube and out of the impinger.

After loading the impingers, securely fasten the U-joints, as illustrated in Figure 5-13, by connecting the outlet of the filter to the center post of the first impinge. Then, the remaining impingers are connected by "side-arm-to-center." Now attach the probe to the sampling case and secure the filter holder in position. Allow the filter compartment and probe to reach operating temperature.

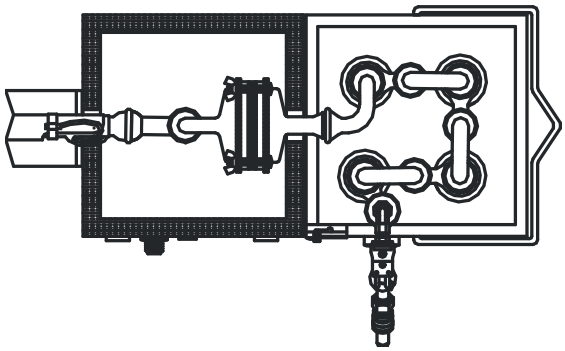

Figure 5-13. Assembly of filter, impingers and u-tubes in the hot and cold boxes of the Federal Reference Method 5 sampling train.

METER CONSOLE OPERATION

The meter console must be calibrated and thoroughly leak-tested prior to operation. Meter console operating procedures will differ somewhat according to manufacturer, however, the procedures discussed here will aid in operating most types of consoles.

When checking for leaks, the sample train is completely assembled as intended for use during the test. Turn on the probe and filter heating systems and allow them to reach operating temperatures. Disconnect the umbilical cord vacuum line and turn on the meter console pump. This allows the pump to lubricate itself and to warm up (this is especially important in cold weather). Leak-test the pitot tubes and lines during this warm-up.

CHECKING FOR LEAKS

As documented in Figure 5-11, the next step after assembling the sampling train is to leak-check. The sampling train is leak-tested when it has reached operating temperature. Turn off the console pump and connect the umbilical vacuum line. With the coarse control valve completely off, turn the fine adjustment (by-pass) valve completely counterclockwise. Plug the nozzle inlet using a rubber stopper

or your finger, then turn on the console pump. Slowly turn the coarse adjustment valve until it is fully open. Gradually turn the fine adjustment valve clockwise until 380 mm Hg (15 in.) Hg vacuum appears on the vacuum gauge. If this vacuum is exceeded, do not turn the fine adjustment valve back counterclockwise; proceed with the leak-test at the vacuum indicated or slowly release the nozzle plug and restart the leak-test. At the desired vacuum, observe the dry gas meter pointer. Using a stopwatch, time the leak rate for at least 60 seconds.

The maximum allowable leak is 0.00057 m^3/min. (0.02 cfm). Having determined the leak rate, slowly release the nozzle plug to bleed air into the train. When the vacuum falls below 130 mm (5 in.) Hg, turn the coarse adjustment valve completely off. If the leak-test is unacceptable, trace all sections of the sampling train from the filter holder inlet back (i.e., leak-test from the filter inlet, then the first impinger, and so on) until the leak is found. Correct the leak and retest. Leak-test at the highest vacuum reached during the test after completing the sampling procedure. Testing for leaks should also be done any time the train is serviced (e.g., filter holder change). Record all dry gas meter readings and leak rates for each leak-test. One must also leak-check, both positive and negative, the Type-S pitot tube, as documented in Figure 5-11. The pitot tube impact pressure leg is leak-tested by applying a positive pressure. Blow into the impact opening until ≥7.6 cm (3 in.) H_2O is indicated by the differential pressure gauge. Seal the impact opening. The pressure should be stable for at least 15 seconds. The static pressure leg of the pitot tube is leak-tested in a similar way by drawing a negative pressure ≥-7.6 cm H_2O. Correct any leaks.

SAMPLE TRAIN OPERATION

As documented in Figure 5-11, after the leak-tests are completed, the sampling console should be prepared for sampling. The sampling console differential pressure gauges for the pitot tubes (i.e., red manometer oil) and orifice meter (i.e., orange manometer oil) zeroed and leveled as required. If the console does not use oil manometers, the gauges must agree with an oil manometer within 5% for at least three Δp readings taken in the stack. This check should be done before testing. Oil manometers should be periodically leveled and re-zeroed during the test if they are used in the console.

The K factor of the isokinetic rate equation should already have been calculated. If not, it should be calculated at this point. After performing the calculation, the operator can then set up the sampling data sheet.

As documented in Figure 5-11, to start the test, first record the initial dry gas meter reading on the field test data sheet (FTDS). Position the sampling train at the first sampling point, read the pitot tube Δp, and calculate the corresponding ΔH. Record the starting time of the test. Turn on the console pump and open the coarse sampling valve while simultaneously starting a stopwatch. Adjust the orifice manometer ΔH to the proper value using the fine adjustment valve. Check temperatures and record all data on the FTDS.

The sampling train should be moved to the next sampling point about 15 seconds before the time at the first point has elapsed. This allows the pitot tube reading to stabilize. The dry gas meter volume at the sample point is read when the stopwatch shows that the sampling time for that point has elapsed. The operator should quickly read the Δp and calculate ΔH for the next point, then set the proper sampling rate. Record all data and proceed as described for all points on the traverse.

At the end of the test, close the coarse valve, stop the pump, and record the stop time. Record the final dry gas meter reading. Remove the sampling train from the stack and test the system for leaks. Record the leak rate. After the train has cooled off, proceed to the cleanup area.

5.5 Phase IV: Sample Cleanup, Analysis, Calculations, and Report Writing

Cleanup

The cleanup and analysis of the sample taken with the Method 5 sampling train is an integral part of the test. The careful operation of Method 5 sampling equipment must be complemented by a careful cleanup of the train components. The flow chart illustrated in Figure 5-14 gives the general procedure for sample cleanup. Each step is presented with appropriate comments.

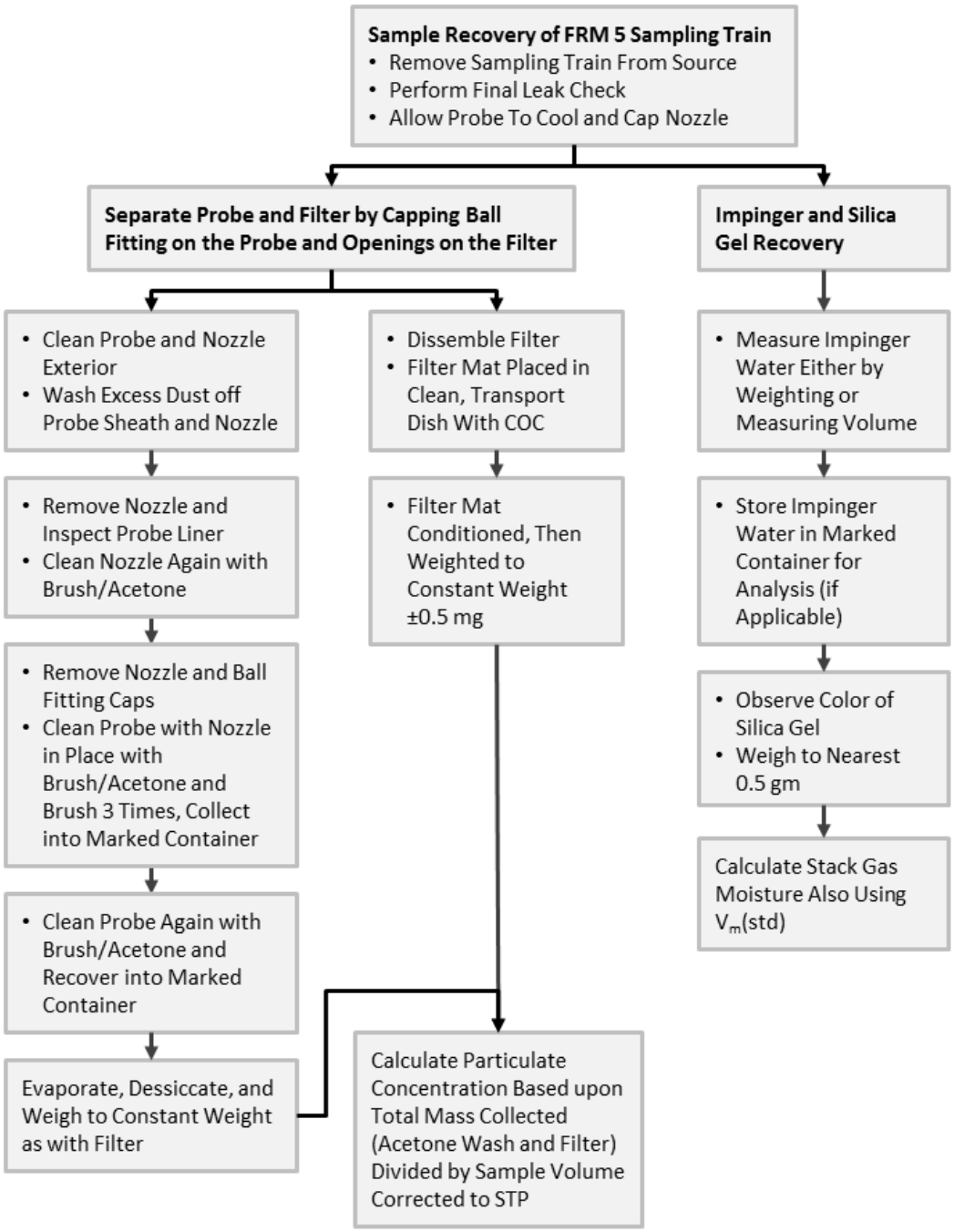

Figure 5-14. Phase IV, Sample Cleanup, Analysis, Calculations, and Report Writing.

Many factors may affect the accuracy of the final sample. Care and experience are very important when cleaning the sample train. A number of helpful tips are as follows:

- Always perform clean-up procedures in a clean, quiet area. The best area is a laboratory.

- Make a probe holder for the probe cleaning procedure or be sure two people perform the procedure in order to prevent spills and accidents.
- Clean all equipment in an area where an accidental spill may be recovered without contaminating the original sample.
  - Open and clean the filter holder over clean glassine or waxed paper so that a spill can be recovered.
  - Clean probe into a container sitting on the same type of glassine paper.
- Clean the probe equipment thoroughly.
  - Brush the probe a minimum of three times.
  - Visually inspect the probe interior.
  - Record the appearance and confidence of cleanliness.
  - Repeat brushing until cleaning is complete.
- Clean filter equipment thoroughly.
  - Brush all glassware until clean.
  - Check with tared cotton swab.
  - Remove all filter mats adhering to rubber seal ring. This is extremely important for accurate particulate weighing.
  - Do not scrape glass frit into sample.
- The laboratory scale accuracy and sensitivity should be checked before each analysis using standard weights. Actual weight and scale reading should agree to ± 0.5 mg.
- Careful labeling of all train components, tared beakers, and sample containers avoids problems and confusion.
- Permanently marked weighing glassware with a permanent record of their new, clean, reference tare weight allows a check of cleanliness when tared just prior to use. This can also be helpful in checking any weighing discrepancies in the analysis (re-tare the glassware periodically).
- Acetone is the solvent recommended for cleaning; however, water washing may be suggested by the type of pollutant sampled and should be added to the procedure if indicated.
- Adding heat to the evaporation of solvent could evaporate volatile materials and give erroneous data.

Sample Recovery

Sample recovery is extremely important because that is where sample loss can occur (bias results low due to sampler errors or blunders) or contamination can be introduced (bias results high).

Sample recovery involves first placing 200 ml of acetone from the wash bottle being used for cleanup in a glass sample container labeled “Acetone Blank”. Inspect the train prior to and during disassembly, and note any abnormal conditions on the FTDS.

Container No. 1 – Filter (See Figure 5-14 flow Chart).

A pair of tweezers and/or clean disposable surgical gloves are used to carefully remove filter from the filter holder, and placed in its identified petri dish container. If necessary, the filter is

folded such that the particulate matter cake is inside the fold. A nylon bristle brush and/or a sharp-edged blade is used to carefully transfer to the petri dish any PM and/or remaining pieces of filter or filter fibers that adhere to the filter support or gasket.

Container No. 2 – Acetone Rinses (See Figure 5-14 flow chart).

As illustrated in Figures 5-15, 5-16, and 5-17, particulate matter is removed, using acetone, from the internal surfaces of the probe nozzle, swaged union fitting, probe liner (use a glass funnel to aid in transferring liquid washed to the container), front half of the filter holder, and (if applicable) the cyclone by rinsing with acetone. All rinses are recovered in a single glass container.

Before cleaning the front half of the filter holder, wipe clean all joints. Rinse with acetone, brush with small nylon bristle brush, and rinse with acetone until there are no visible particles. Make a final acetone rinse. For probe liner, repeat rinse, brush, rinse sequence at least three times for glass liners, and six times for metal liners. Make a final rinse of the probe brush with acetone. For Probe Nozzle, use the nylon nozzle brush and follow the same sequence of rinse, brush, rinse as for the probe linger.

After completing the rinse, tighten the lid on the sample container. Mark the height of the fluid level. Label the container.

Container No. 3 – Silica Gel (See Figure 5-14 flow chart)

Recovery of the silica gel involves first determining whether the silica gel has been completely spent, noting its condition and color on the FTDS. Transfer the silica gel from the impinge to a pre-weighted bottle by way of the side arm of the impinge stem, as illustrated in Figure 5-18. Weigh the silica gel for moisture determination. Either reuse in the next run, using the final weight as the initial weight for the new sampling run, or discard and reload impinger.

Impinger Water

Note on the FTDS any color or film in the liquid catch. Measure the volume in the impingers or weigh to the nearest gram for calculating stack gas moisture determination, as illustrated in Figure 5-19. Discard the liquid, unless analysis of the impinger catch is required for condensibles.

Figure 5-15. Probe liner/nozzle rinse with acetone.

Figure 5-16. Internal rinse with acetone of probe nozzle.

Figure 5-17. Brushing of probe nozzle with acetone.

Figure 5-18. Recovery of silica gel into pre-weighted bottle.

Figure 5-19. Measurement of impinger water using graduated cylinder.

CALCULATIONS

At the conclusion of each sampling run, it is prudent to calculate the stack gas moisture (for the next sampling run) as well as the average isokinetic rate. To calculate the stack gas moisture content (B_{ws}), the following equations are used to compute the sample gas volume ($V_{m(std)}$) and gas moisture volume ($V_{wc(std)}$):

$$V_{m(std)} = K_3\, Y \frac{V_m\left(P_{bar} + \frac{\Delta H}{13.6}\right)}{T_m}$$

Where:
- ΔH = Average orifice tube pressure during sampling, in. H_2O
- V_m = Dry gas volume measured by dry gas meter, dcm (dcf)
- T_m = Absolute temperature at dry gas meter, °K (°R)
- Y = Dry gas mater calibration factor
- K_3 = 0.3858 °K/mm Hg (metric units)
  = 17.64 °R/in. Hg (English units)

$$V_{wc(std)} = K_2(W_f - W_i)$$

Where:
- W_f = Final weight of water collected, g
- W_i = Initial weight of water collected, g
- K_2 = 0.001335 m^3/g (metric units)
  = 0.04715 ft^3/g (English units); and

$$B_{ws} = \frac{V_{wc(std)}}{V_{m(std)} + V_{wc(std)}}$$

Where: B_{ws} = Proportion of water vapor, by volume, in the gas stream

Next, the average stack gas velocity is calculated. The equation for average gas velocity in a stack or duct is:

$$V_s = K_p C_p \left(\sqrt{\Delta p}\right)_{avg} \sqrt{\frac{T_{s(avg)}}{P_s M_s}}$$

Where: V_s = Average stack gas velocity, m/sec (ft/sec)
C_p = Pitot tube coefficient, dimensionless
$(\sqrt{\Delta p})_{avg}$ = Average of the square roots of each stack gas velocity
T_s = Absolute average stack gas temperature, °K (°R)
P_s = Absolute stack gas pressure, mmHg (in. Hg)
= $P_{bar} + P_g/13.6$
P_{bar} = Barometric pressure at measurement site, mm Hg (in. Hg)
P_g = Stack static pressure, mm H_2O (in. H_2O)
M_s = Molecular weight of stack on dry basis, g/g-mole (lb/lb-mole)
= $M_d (1-B_{ws}) + 18.0\ B_{ws}$
M_d = Molecular weight of stack on dry basis, g/g-mole (lb/lb-mole)
K_p = Constant, 34.97 for metric system (85.49 for English system)

The average percent isokinetic sampling rate is calculated as:

$$\%I = \frac{K_4 T_s V_{m(std)}}{P_s v_s A_n \theta (1 - B_{ws})}$$

Where: A_n = Cross-sectional area of the nozzle, m^2 (ft^2)
θ = Sampling time, minutes
K_4 = 4.320 (metric units)
= 0.09450 (English units)

ANALYSIS

Analysis of the sample using approved procedures and good laboratory technique provides accurate laboratory data. Good testing at the stack must be followed by accurate analysis in the laboratory so that valid data may be obtained.

For the weighing of particulate samples and the analysis of the impinger catch, the laboratory must have the following items:

- Analytical balance with minimum precision to 0.5 mg.
- Large desiccating container that is airtight.
- American Chemical Society reagent grade organic solvents.
- Deionized, glass-distilled water.

When conducting the analysis, evaporate a control blank of 100 ml of each solvent used in any part of the analysis in a tared beaker at room temperature and pressure. Use only glass bottles and containers for all procedures that involve analytical work-up. Only silica gel may be stored in plastic containers.

Organic-inorganic extraction of the impinger may be required in determining emissions from some sources. Procedures are either specified for this other test method or in special guidelines provided by state or local environmental control agencies.

The most important aspect of cleaning and analyzing the Method 5 sampling train is the practice of good laboratory technique. The sampling team may not include an experienced chemist; therefore, good technique may have to be learned by all team members. If an experienced analytical chemist is a member of the sampling team, it would probably be best for the chemist to assist in cleaning the equipment.

VARIATIONS AND ALTERNATIVES TO OPERATING AN METHOD 5 SAMPLING TRAIN

Finally, there are several acceptable variations to the Federal Reference Method 5 sampling train and it use in quantifying particulate matter from industrial sources. Variations include:

- Acceptable alternatives to glass probe liners are metal liners, for example, 316 stainless steel, Inconel or other corrosion resistant metals made of seamless tubing. These can be useful for cross-sections over 3 m (10 ft.) in diameter. Whenever practical, make every effort to use borosilicate glass or quartz probe liners. Metal liners will bias particulate matter results high.
- For large stacks, consider sampling from opposite sides of the stack to reduce the length of probe.
- Use either borosilicate or quartz glass probe liners for stack temperatures up to 480° to 900°C (900 – 1,650°F). The softening temperature for borosilicate glass is 820°C (1,508°F), and for quartz it is 1,500°C (2,732°F).
- Rather than labeling filters, label the shipping containers (glass or plastic petri dishes), and keep the filters in these containers at all times except during sampling and weighing.
- Use more silica gel in impinger 4, if necessary, but ensure that there is no entrainment or loss during sampling. Hint: Loosely place cotton balls or glass wool in the neck of the silica gel impinger outlet stem.
- If a different type of condenser (other than impingers) is used, measure the amount of moisture condensed either volumetrically or gravimetrically.
- For moisture content, measure the impinger contents volumetrically before and after a sampling run. Use a pre-weighed amount of silica gel in a shipping container, then empty the silica gel after the run back into the container for weighing at another time.
- If the total particulate catch is expected to exceed 100 mg or more or when water droplets are present in the stack gas use a glass cyclone between the probe and filter holder.
- If high pressure drops across the filter (high vacuum on the gauge) causing difficulty in maintaining isokinetic sampling, replace the filter. Suggestion: Use another filter assembly rather than changing the filter itself. Before installing a new filter, conduct a leak-check. Add the filter assembly catches for the total particulate matter weight.
- Use a single train for the entire sampling run, except when simultaneous sampling is required in two or more separate ducts or at two or more different locations within the same duct, or in cases where equipment failure necessitates a change in trains. In all other situations, obtain approval from the regulatory agency before using two or more trains.

- When two or more trains are used, analyze separately the front-half and (if applicable) impinger catches from each train unless identical nozzle sizes were used on all trains. In this case, the front-half catches may be combined (as may the impinger catches) and one analysis of front-half catch and one analysis of impinger catch may be performed. Consult with the regulatory agency for details concerning the calculation of results when two or more trains are used.
- If a flexible line is used between the first impinger or condenser and the filter holder, disconnect the line at the filter holder, and let any condensed water or liquid drain into the impingers or condenser.
- Do not cap off the probe tip too tightly while the sampling train is cooling down, as this would create a vacuum in the filter holder, which may draw water from the impingers into the filter holder.

SAFETY ON SITE

Source sampling is performed at a variety of industrial sites and under many different conditions. Adequate safety procedures may be different for any given situation depending on the facility operations. The test team must be aware of safe operating methods so that alert discretion may be used for team safety at a particular sampling site. Safety is an attitude that must be instilled in all sampling team members. Well thought out and implemented procedures will ensure the safety of all team members. It must be stressed that each team member is responsible for his/her own safety, as well as that of the other team members.

The pre-test survey meeting at the facility should include all of the people and information that are essential to make decisions and secure agreement from all parties on the source testing protocols. The pre-test survey meeting offers an opportunity to review information on safety and industrial hygiene at the facility, and investigate safety issues specific to the sources being tested. The stack samplers should work with the source owner to develop the agenda for the meeting, including a walk-through of all areas where the sampling team will be working.

The Source Evaluation Society (SES) Safety Guidelines Handbook Second Edition is an excellent reference document specifically for source testing personnel. The manual is a compilation of submissions from different members of the SES Safety Committee and is intended to be a living document. It also contains information on first aid, hazardous chemicals, site safety checklists and a CD version of the NIOSH Pocket Guide to Chemical Hazards. However, it is stated in the guidebook that; **any OSHA requirements supersedes the information contained in the Handbook (**http://www.sesnews.org/).

The following procedures are suggested in the SES Safety Guidelines Handbook after thoroughly reviewing the guidebook materials. Make notes on any safety issues that may be applicable at the facility to be tested. Schedule the pre-test survey meeting early, with enough time to allow for any sampling protocol modifications or maintenance procedures (repairs) that may be identified in the meeting or during the walk-through.

The pre-test survey meeting participants will vary depending on the facility and the test methods to be conducted. The following list suggests who may be included in the meeting:

- Facility Representative
- Facility Source Test Coordinator
- Source Test Team Leader
- Facility Safety Officer
- Facility Manufacturing Unit Representative
- Regulatory Agency Source Test Observer

Copies of the Material Safety Data Sheets (MSDSs) for the materials that will most likely be encountered by sampling personnel should be requested. MSDSs should be read before arriving on- site. Sampling personnel need to be aware of what the hazardous properties of the materials are and learn the symptoms of exposure. They also need to understand the first aid and clean up recommendations before arrival on site. Work should be performed in pairs so there is someone available to assist if help is needed.

Chapter 22 in the SES Safety Guidelines Handbook lists the items to include when conducting a Facility walk-through. They are:

- Request to have the Facility Safety Officer and the source test coordinator participate in the walk-through.
- Inspect the source locations to be sampled and the access to and from the testing sites. Ask questions about anything that may be a safety issue for the sampling crew. Also consider the safety risk that the sampling may have on other personnel at or near the test site.
- Make a list of modifications and repairs that need to be done prior to sampling. Review the list with the appropriate facility representatives before leaving the meeting. Establish accountabilities for each action item on the list. Plan to follow up on the action items before returning to conduct the source sampling.
- Determine who your plant contact is for emergencies and how to initiate emergency medical services.
- Identify the nearest locations of eye wash fountains and safety showers.
- Identify any unusual conditions requiring special equipment during the testing. For example: fall protection devices, fire extinguishers, GFCI, etc.

STACK TESTING FOR PARTICULATE POLLUTANTS
PRETEST CHECKLIST

PRETEST MEETING CHECKLIST

Plant Name _Date
Plant Address _____

Source to be Tested _____
Plant Representative _____Phone _____
Plant Manager _____Phone _____
Test Team Company Name/Address _____

Team Representative _____Phone _____
Regulatory Agency(s)/Address _____

Agency
Representative _____Phone _____

Meeting Participants	Affiliation	Phone	Email

I. FACILITY OPERATION

A. Process

a. Process Description _____
_____

b. Method of process weight rate or fuel feed determination _____
_____

c. Process parameters (list below or use operation data sheet for process)

Process Parameters to be Monitored	**Design/Normal Values**	**Acceptable Limits**

See operations data sheet for _____

d. Acceptable values of raw material and/or fuel composition _____
e. Normal operating cycle and its effect on test plan _____
f. Test Operating Cycle _____

B. Control Devices

a. Control Device(s)
b. Operating Parameters (list below or use operating data sheet for process)

Operating Parameters to be Monitored	Design/normal Values	Acceptable Limits

c. Normal Operating Cycle and Periodic Maintenance (e.g., ash hopper emptying) _____

d. Test Operating Cycle _____

C. Incinerator Information

a. Type of Incinerator: Liquid Injection _____Fixed Hearth _____
Multiple Hearth _____Rotary Kiln _____Fluidized Bed _____
Rotary Combustor _____

b. Maximum Rated Heat Input _____Btu/hr

c. Maximum Rated Air Flow _____acfm

d. Dimensions of Combustion Chamber(s) _____
_____
(Indicate Primary or Secondary)

e. Does Incinerator Include a Heat Recovery Device? _____Yes _____No

f. Maximum Stream Production or Hot Water Rate _____lb/min or gal/min

g. Air Pollution Control Devices: Quench Tower _____Pre-cooler _____
Venturi Scrubber _____Carbon Bed _____Packed Tower _____
Cyclone _____Hydrosonic Jet _____Ionizing _____

h. Fluid Bed Media _____

i. Rotation Speed _____rpm

j. Liquid Injection _____Type of Atomization _____

k. Feed Material: Solid _____Liquid _____Gas _____Other _____

l. Maximum Feed Rate: Btu/hr _____Gal/hr _____Lb/hr _____ton/hr _____

m. Feed Delivery: Manual _____Conveyor _____Screw _____Pump _____

n. Identify Feed Streams:

No. 1: _____No. 2: _____No. 3: _____No. 4: _____

II. TRIAL BURN PARAMETERS

Parameter	Item	Test Run #1	Test Run #2	Test Run #3
Feed Rate				
Heat Content of Feed				
Auxiliary Fuel Rates	Gas Oil			
Feed Composition	Water, % Ash, %			
POHC (s), % or ppm				
Other Organics				
Sulfur Content, % or ppm				
Nitrogen Cont., % or ppm				
Phosphorus Cont., % or ppm				
Metals, % or ppm				
Liquid	Viscosity Specific Gravity			
Sludges	Moisture, %			
Gases	Density			

III. INCINERATOR PARAMETERS

Parameter	Item	Test Run #1	Test Run #2	Test Run #3
Temperature	Primary Combustion Chamber			
	Secondary Combustion Chamber			
	Heat Recovery Device Inlet			
	Heat Recovery Device Outlet			
	Air Pollution Control Device Inlet			
	Air Pollution Control Device Outlet			
	Stack Gases			
Draft (in. Water)	Primary Combustion Chamber			
	Secondary Combustion Chamber			
	Heat Recovery Inlet			
	Heat Recovery Outlet			
ESP	Unit Voltage, Kv			
	Unit Current, ma			

-Baghouse	Pressure Drop, inches			
	Air Flow Rate, acfm			
Dry Scrubber	Lime Feed Rate, gpm			
	Air Flow Rate, acfm			
Air Flow Rates	Primary, acfm			
	Secondary, acfm			
Stack Gas Monitoring				
	Oxygen, %			
	CO_2, %			
	CO, ppm			

Parameter	Item	Test Run #1	Test Run #2	Test Run #3
	NO_x, ppm			
	HC, ppm			
	Opacity, %			
	SO_2, ppm			
	Other, ppm/%			
Feed Sample Taken?	Feed No.			
	Feed No.			
	Feed No.			
Auxiliary Fuel Samples Taken?				
Scrubber pH				
Type of Alkaline Added?				
Rate of Addition, lb/hr				
Ash Removal Rate, lb/hr				
Automatic Feed Cutoffs	Low Temperature, °F			
	High CO, ppm			
	Low Oxygen, %			

IV. TESTING METHODOLOGY TO BE DISCUSSED

Sampling Location _____
Sampling Points _____
Cyclonic Flow Check _____
Pollutant Measurement Methods _____
Mandatory Calibrations Sheets to be Provided (If not provided immediately prior to starting test program, testing should be delayed until observer receives them or authorization to proceed by Task Manager)
Orifice _____Dry Gas Meter (Y) _____Nozzle _____Pitot Tube _____
Delta H@ _____Thermocouples _____Barometer _____
Fuel, Raw Material/Produce Sampling _____

Emission Rate Calculation _____

Destruction Removal Efficiency Calculation _____

Minimum Sample Volume Calculation _____

Sample Recovery Area _____

Dry Molecular Weight/dilution Determination _____
Integrated Bag _____Grab Sample _____Orsat _____
Fyrite _____CEM _____
Stack or Duct Condition _____

Safety Requirements _____

Test Reporting Requirements _____

Test Schedule _____

Plant Tour

V. SAMPLING METHODLOLGIES TO BE USED

Pollutant Parameter	Methodology	Remarks, Additional Quality Assurance, and/or Modifications

VI. GENERAL COMMENTS

Signature of Agency Representative Affiliation of Representative Date

Signature of Plant Representative Date

5.6 SUMMARY

THE SOURCE TEST

This chapter covered the following topics:

- Phase I: Establishing Test Objectives, Developing SOPs, Performing Pre-test. Measurements and Finalizing Test Protocols.
- Phase II: Equipment and Chemical Preparation.
- Phase III: The Source Test.
- Phase IV: Sample Cleanup, Analysis, Calculations and Report Writing.

BIBLIOGRAPHY

Aldina, G.J., and J.A. Jahnke. 1979. *Source Sampling for Particulate Pollutants*. (APTI Course 450 Student Manual). EPA 450/2-79-006. U.S. Environmental Protection Agency.

Office of the Federal Register National Archives and Records Administration. 1992. Standards of performance for new stationary sources. *Code of Federal Regulations*, Title 40 (Protection of Environment), Part 60, Appendix A.

Rom, J.J. 1972. *Maintenance, Calibration, and Operation of Isokinetic Source-Sampling Equipment*. APTD-0576. U.S. Environmental Protection Agency.

CHAPTER 6

6.0 REPORT WRITING AND EMISSIONS CALCULATIONS

6.1 OVERVIEW

PURPOSE

The purpose of this chapter is to introduce students to the structure of the test report and identify the emission units and calculations related to the F factor method used when compiling the test report.

LEARNING OBJECTIVES

At the conclusion of this training, students will be able to:

- Identify and describe each section of the test report.
- Relate how the F factor method is used in calculating emissions for particulate matter.
- Perform F factor calculations and tabulations.
- Apply the F factor to Method 5.
- Explain errors and problems that may occur when using F factors.

INTRODUCTION

The report of a source sampling test presents a record of the experimental procedure and the test results. It is a written document describing a technical study and should state the objectives of the test, the procedures used to accomplish these objectives, results of the tests, and conclusions that can be drawn from the results.

The information should be presented in a clear, concise manner. The report must document all aspects of the test for follow-up quality control. Since the data may be used in litigation, sufficient data must be available to reconstruct all calculations, including those performed for calibrations. A suggested format for the report is given in this chapter, along with a brief explanation of each topic. A “quick reference” outline of the report format follows this section.

6.2 THE STACK TEST REPORT

PREPARING THE STACK TEST REPORT

The written test report should be sufficient to assess compliance with the underlying regulatory requirements, permit conditions, or enforcement order, and adherence to the test requirements. When reviewing the site-specific test plan, the delegated agency should identify for the facility

any information that should be included in the test report. During the actual test program, there are usually modifications to the procedures specified in the site-specific test plan, and these modifications should be documented in the test report.

Similar to the site-specific test plan, certain basic elements should be addressed in a test report to document the testing conditions and results, and enable the delegated agency to determine whether a complete and representative stack test was performed. For a prototype of a sufficiently detailed test report, see ***Emission Measurement Center Guideline Document*** (GD043), "***Preparation and Review of Emission Test Reports***" (December 1998) (http://www.epa.gov/ttn/emc/guidlnd.html) . The purpose of this guideline is to promote consistency in the preparation and review of test reports for emission test programs sponsored by the EPA, state and local agencies, and the private sector.

The emission test report must provide the information necessary to document the objectives of the test and determine whether proper procedures were used to accomplish these objectives. The emission test report presents the information gathered according to the emission test plan. Therefore, the contents of the test plan serve as the foundation for the test report.

If the test report does not contain sufficient information with which to adequately review the testing process and data results, it is within the discretion of the delegated agency to request additional information, or require another test if appropriate.

Include chain-of-custody information from sample collection through laboratory analysis and transport in the test report. It also should include sufficient raw data and cross correlations in the appendices such that a new set of calculations including statistics could be independently generated from the raw data if necessary (e.g., median versus geometric-mean).

Submit the test report to the delegated agency as soon as possible after completion of the stack test and, at a minimum, in compliance with any underlying regulatory requirements. For stack tests being conducted pursuant to 40 CFR Part 60, the test report is to be submitted within 180 days after the initial startup date or within 60 days after reaching maximum production rate (§ 60.8[a]).

For those tests being conducted pursuant to 40 CFR Part 61, the test report is to be submitted within 31 days after completion of the test (§ 61.13[f]). If the test is being conducted pursuant to 40 CFR Part 63, the test report must be submitted within 60 days after the test is completed unless another time frame is specified in the applicable subpart (§ 63.9[h][2][i][G]). In addition, all test reports should be maintained consistent with the requirements of the CAA and its implementing regulations, and made available to EPA upon request. To assist in the preparation and transcription of test plans and reports, the EPA's Electronic Reporting Tool (ERT) should be used when possible (further discussed later in this section).

STACK TEST REPORT COMPONENTS

The standard test report contains a table of contents, five sections, and appendices. The sections of the test report are:

- Introduction
- Plant and Sampling Location Descriptions
- Summary and Discussion of Test Results
- Sampling and Analytical Procedures

- Internal QA/QC Activities
- Appendices

The ***Emission Measurement Center Guideline Document*** lists the contents for each section and provides an example to illustrate the intent of each list. The list at the beginning of each section serves a dual purpose: (1) as a guide to the preparer and (2) as a checklist for both the preparer and the reviewer of the test report.

Section 1: Introduction

The 'Introduction' consists of two sections: Summary of Test Programs, and Key Personnel.

1.1 Summary of Test Programs
In this section, write a brief summary that identifies or states, as applicable, the following:

- Responsible groups (participating organizations)
- Overall purpose of the emission test
- Regulations, if applicable
- Industry
- Name of plant
- Processes of interest
- Air pollution control equipment, if applicable
- Emission points and sampling locations
- Pollutants to be measured
- Dates of emission testing

1.2 Key Personnel
In this section, include the following:

- Names, affiliations, and telephone numbers of key personnel

Section 2: Plant and Sampling Location Descriptions

The 'Plant and Sampling Location Descriptions' consists of four sections:

2.1 Process Description and Operation
In this section, include the following:

- General description of the basic process
- Flow diagram (indicate emission and process test points)
- Discussion of typical process operations, such as:
  - Production rates
  - Feed material and feed rates or batch sizes
  - Equipment sizes and capacities (ratings)
  - Production schedules (hours/day, days/week, weeks/year, peak periods)

In the flow diagram, trace the process from beginning to end. Identify the major operations. Show only gas, liquid, and solid flow streams that relate to the emission test.

2.2 Control Equipment Description
In this section, include the following:

- Description of all air pollution control systems, if applicable

- Discussion of typical control equipment operation and, if necessary, a schematic

2.3 Flue Gas Sampling Locations
In this section, include the following:

- Provide a schematic of each location. Include:
  - duct diameter
  - direction of flow
  - dimensions to nearest upstream and downstream disturbances (include number of duct diameters)
  - location and configuration of the sampling ports
  - nipple length and port diameters
  - number and configuration of traverse points
- Confirm that the sampling location met the EPA criteria - If not, give reasons and discuss effect on results
- Discuss any special traversing or measurement schemes

2.4 Process Sampling Locations
If process stream samples were taken, include the following:

- Schematic of locations, if helpful
- Description of each sampling or measurement location
- Description of procedure used to obtain samples or measurements
- Discussion on the representativeness of each of the process stream sampling locations and samples

Section 3: Summary and Discussion of Test Results

The 'Summary and Discussion of Test Results' consists of at least three sections, including Objectives and Test Matrix, Field Test Changes and Problems, and the Results.

3.1 Objectives and Test Matrix
In this section:

- Restate the overall purpose of the test program
- List the specific objectives
- Include a test matrix table showing the following (include schematics, if helpful):
  - Run no. and date
  - Sample type/pollutant
  - Test method
  - Sampling locations
  - Clock time
  - Sampling time

3.2 Field Test Changes and Problems
If no field test changes or problems occurred, this section may be omitted. In this section, include the following items:

- List and discussion of any changes in sampling and analytical methods for emissions or process information

3.3 Presentation of Results
In this section and subsequent sections (one section for each objective):

- Address each of the specific objectives and present a summary of the results in tabular Form
- Discuss the data

Section 4: Sampling and Analytical Procedures

The 'Sampling and Analytical Procedures' consists of two sections:

4.1 Test Methods
In this section, include the following:

- Schematic of each sampling train
- Flow diagram of the sample recovery
- Flow diagram of sample analysis
- Description of any modifications
- Discussion of any problematic sampling or analytical conditions

If a non-EPA method was used in place of an EPA method, explain the reason. Place a copy of all methods in Appendix A to the report. Be sure that non-EPA methods are written in detail similar to that of the EPA methods.

4.2 Process Test Methods
In this section, include the following:

- Description of procedures used to obtain process stream and control equipment data
- Calibration procedures for any test equipment, if appropriate

Section 5: Internal QA/QC Activities

The 'Internal QA/QC Activities' consists of two sections:

5.1 QA/QC Problems
In this section, discuss:

- QA/QC problems that occurred during the test
- Sample identification and custody problems

5.2 QA/QC Audits
For each of the test methods for which an audit was conducted, list (if applicable) the following:

- Type of audit conducted
- Limits of acceptability
- Supplier of audit material
- Audit procedure
- Summary of results

Appendix

The test report appendix should include the following items:

- Test log (record of events at the site)
- Raw field data sheets (or signed copies)
- Laboratory report including raw data, tables, and calibration graphs

- Testing equipment listing
  - Design and manufacturer
  - Calibration procedures and data sheets
  - Serial numbers of equipment used in test
- Copies of the methods applied from CFR Appendix A, or other reference procedure outline
- Copies of applicable statutes and regulations concerning the testing

QUICK REFERENCE OUTLINE FOR REPORT WRITING

For your reference the outline that follows represents the format for the test report. The outline is provided to assist you when you are required to write the test report.

I. Presentation of report

A. Suitable cover

B. Cover page

1. Report title
2. Organization requesting test
3. Organization performing test
4. Location and dates of test

C. Signature page

1. Signatures of all test participants, laboratory personnel, and supervisors

D. Table of contents

II. Report

A. Introduction

1. Summary of Test Program
2. Key Personnel

B. Plant and Sampling Location Descriptions

1. Process Description and Operations
2. Control Equipment Description
3. Flue Gas Sampling Locations
4. Process Sampling Locations

C. Summary and Discussion of Test Results

1. Objectives and Test Matrix
2. Field Test Changes and Problems
3. Presentation of Results

D. Sampling and Analytical Procedures

1. Test Methods
2. Process Test Methods

E. Internal QA/QC Activities

1. QA/QC Problems
2. QA/QC Audits

F. Appendix

ELECTRONIC REPORTING TOOL (ERT)

The EPA's Electronic Reporting Tool (ERT) is an electronic alternative for paper source test reports documenting more than 20 of EPA's emissions measurement methods for stationary sources. The ERT is used to electronically create and submit stationary source sampling test plans to regulatory agencies and, after approval, to calculate and submit the test results as an electronic report to the regulatory agency. EPA now requires by regulation a number of industries to perform emissions performance tests and to electronically submit such emissions test data to EPA. Affected industrial facilities are required to use the ERT to generate files containing emissions source test data. The ERT is located at: http://www.epa.gov/ttn/chief/ert/index.html.

The ERT replaces the time-intensive manual preparation and transcription of stationary source emissions test plans and reports currently performed by contractors, and time-intensive manual quality assurance evaluations and documentation performed by State agencies. The ERT provides a format that:

- Highlights the need to document the key information and procedures required by the existing EPA Federal Test Methods;
- Facilitates coordination among the source, the test contractor, and the regulatory agency in planning and preparing for the emissions test;
- Provides for consistent criteria to quantitatively characterize the quality of the data collected during the emissions test;
- Standardizes the reports; and
- Provides for future capabilities to electronically exchange information in the reports with facility, State or Federal data systems.

In addition to improving the content and quality of source emissions test reports, the ERT should:

- Reduce the workload associated with manual transcription of information and data contained in the report;
- Reduce the resources required to store and access the reports; and
- Reduce redundant efforts in using the data for multiple purposes.

6.3 EMISSION UNITS AND CALCULATIONS

REPORTING IN UNITS OF THE STANDARD: F FACTOR METHODS

The use of the **F factor** in calculating particulate emission levels from new stationary sources was promulgated in the October 6, 1975 Federal Register. The F factor is intended to reduce the amount of data necessary to calculate particulate emissions in terms of the standard expressed as pounds per million Btu heat inputs (lb/10^6 Btu). An F factor is the ratio of the gas volume of the products of combustion to the heat content of the fuel. The dry F factor (F_d) includes all products of combustion less water, the wet F factor (F_w) includes all products of combustion, and the carbon F factor (F_c) includes only carbon dioxide. As mentioned earlier, there are currently three types of standards for particulate mass:

1.	concentration standards	c_s	(ppm, gr/dscf, g/dscm, lb/ft^3)
2.	pollutant mass rate standards	pmr_s	(lb/hr, kg/hr)
3.	process rate standards	E	(lb/10^6 Btu, ng/J, lb/ton)

The emission rate, in terms of the units given in the New Source Performance Standards (NSPS), is related to concentration and mass rate in the following manner:

(Eq. 6-1) $$E = \frac{pmr_s}{Q_H} = \frac{c_s Q_s}{Q_H}$$

Where: Q_s = the stack gas volumetric flow rate (units of ft^3/hr, m^3/hr)
Q_H = the heat input rate, the rate at which combusted fuel supplies heat to the boiler or other heat utilization system (Btu/hr, Kcal/hr)

By dimensional analysis, it can be seen that the units of E in terms of pollutant mass per unit of heat input are

(Eq. 6-2) $$E = \frac{lb/hr}{10^6\,Btu/hr} = \frac{(lb/ft^3)(ft^3/hr)}{10^6\,Btu/hr} = lb/10^6\,Btu$$

To obtain emission rates in units of lb/10^6 Btu, it is necessary for the source sampler to obtain the following information:

1. Pollutant concentration, c_S
   a. Pollutant mass captured
   b. Dry gas volume sampled
2. Effluent volumetric flow rate, Q_S
   a. Stack gas velocity
   b. Stack temperature
   c. Stack pressure

d. Dry gas composition (Orsat) $\%CO_2$, $\%O_2$, $\%N_2$

e. Moisture content

3. Heat input rate, Q_H

a. Fuel input rate

b. Proximate analysis of fuel

Although all of the quantities for c_S and Q_S are obtained in a source test, the quantities making up the heat input rate, Q_H, may not be easily obtained. Once obtained, their accuracy may be in doubt since the source sampler usually is not able to calibrate or check the accuracy of the source fuel flow meter. The representative nature of the fuel sample and the accuracy of the fuel analysis itself may be difficult to determine. Consequently, factors based on simple principles of combustion were developed to avoid many of the problems involved in the calculation of E. By using the F factors, E may be obtained from a formula such as the following:

(Eq. 6-3) $$E = c_s F_d \left(\frac{20.9}{20.9 - \%O_2} \right)$$

Where: F_d is the dry F factor

The F factor essentially replaces the ratio Q_S/Q_H and the term in brackets is merely an excess air correction.

F factors are useful in calculating emissions for particulate matter. In the case of their application to continuous monitoring instrumentation for gases, it is even more valuable. The use of the F_d factor and its variants (F_c and F_W factors) in reporting continuous monitoring data in terms of lb/10^6 Btu heat input enables the source operator to monitor only the pollutant gas concentration and the oxygen or carbon dioxide concentrations. Without this method, it would be necessary to continuously monitor stack gas velocity, temperature, fuel input rate, and so on. This would be possible, but impractical and expensive.

In the sections below, the derivation and uses of the F factors will be discussed further. Also, the requirements of 40 CFR 60.46 for the use of the F factors in Method 5 will be given.

DERIVATION OF THE F FACTOR METHOD

Before proceeding with the derivation of the F factors, it is necessary to give a few definitions used in combustion analysis, namely those for **proximate analysis, ultimate analysis,** and **gross calorific value**. The definitions generally apply to the fuel "as received" at the plant.

Proximate analysis is a fuel analysis procedure that expresses the principal characteristics of fuel as follows:

1. % moisture 2. % ash 3. % volatile matter 4. % fixed carbon	Total 100%	5. % sulfur 6. Heating value (Btu/lb) 7. Ash fusion temperature

Ultimate analysis is the determination of the exact chemical composition of the fuel without paying attention to the physical form in which the compounds appear. The analysis is generally given in terms of percent hydrogen, percent carbon, percent sulfur, percent nitrogen, and percent oxygen.

Gross calorific value (GCV), also termed the "high heating value," is the total heat obtained from the complete combustion of a fuel, referred to a set of standard conditions. The GCV is obtained in the proximate analysis as the "heating value."

If one considers the volume of gas generated by the combustion of a quantity of fuel, the F factor relationship can be easily obtained. First, defining V_t as the theoretical volume of dry combustion products generated per pound of fuel burned in dscf/lb, the following equality can be made:

(Eq. 6-4) $$\frac{Q_s}{Q_H}(\text{excess air correction}) = \frac{V_t}{GCV}$$

Dimensionally, this says

$$\frac{ft^3/hr}{Btu/hr} = \frac{ft^3}{Btu}$$

Q_S and Q_H can be determined at the source. V_t is obtained from the ultimate analysis of the fuel.

Remembering the first equation given in this section, Eq. (6-1)

$$E = \frac{c_s Q_s}{Q_H}$$

and substituting in Eq. (6-4),

$$E = \frac{c_s V_t}{GCV} \frac{1}{\begin{pmatrix}\text{excess air}\\ \text{correction}\end{pmatrix}}$$

The quantity V_t/GCV is then defined as the F_d factor and the following simplified equation is obtained:

(Eq. 6-5) $$E = c_s F_d \frac{1}{\begin{pmatrix}\text{excess air}\\ \text{correction}\end{pmatrix}}$$

For Method 5, the oxygen concentration of the source must be determined simultaneously and at the same traverse. Since the excess air correction using percent oxygen is:

$$\left(\frac{20.9 - \%O_2}{20.9}\right)$$

the equation to be used for calculating emissions for Method 5 is:

(Eq. 6-6) $$E = c_s F_d \frac{20.9}{20.9 - \%O_2}$$

As mentioned earlier, there are different types of F factors (see Table 6-1). The differences arise in the way in which the excess air corrections are determined. For example, the F_c factor is used when the percent CO_2 is determined instead of percent O_2.

Note: The F_c factor is not promulgated for use in calculating particulate emissions, although it may be used in reporting continuous monitoring data for gases.

It should also be noted that the F factor method may be used with the percent O_2 and c_{ws} determined on a wet basis if the moisture content B_{ws} of the stack is known:

(Eq. 6-7) $$E = c_{ws} F_d \frac{20.9}{20.9(1 - B_{ws}) - \%O_{2w}}$$

Note: The subscript w stands for measurements made on a wet basis. All other measurements are assumed to be made on a dry basis.

Table 6-1. F factors.

Factor	Excess Air Units	Measurement Required for Emissions	Calculations	Comments
F_d	$\frac{dscf}{10^6 Btu}$	$\%O_2$ (dry basis)	$E = c_s F_d \left[\frac{20.9}{20.9 - \%O_{2d}}\right]$	c_s determined on dry basis
F_c	$\frac{dscf}{10^6 Btu}$	$\%CO_2$ (dry or wet basis)	$E = c_s F_c \left[\frac{100}{\%CO_2}\right]$	c_s on dry or wet basis consistent with CO_2 measurement
F_w	$\frac{wscf}{10^6 Btu}$	$\%O_2$ (wet basis)	$E = c_{ws} F_w \left[\frac{20.9}{20.9(1 - B_{wa}) - \%O_{2w}}\right]$	The "wet" F factor, c_{ws} and $\%O_2$ on wet basis B_{wa}= average moisture content of ambient air

F_O	-	-	$F_O = \frac{20.9}{100}\frac{F_d}{F_c} = \frac{20.9 - \%O_2}{\%CO_2}$	Miscellaneous factor useful for checking Orsat data

CALCULATION AND TABULATION OF F FACTORS

The F_d factor method carries with it the assumption that V_t/GCV, the ratio of the quantity of dry effluent gas generated by combustion to the gross calorific value, is constant within a given category. This ratio, of course, is the F_d factor.

V_t is determined from the stoichiometry of the combustion reaction. If a hydrocarbon is burned in air, gaseous products will result; the volumes of which can be calculated. For example,

$$\underset{\text{propane}}{C_3H_8} + \underset{\text{air}}{O_2 + N_2} \rightarrow \underset{\text{gases}}{CO_2 \uparrow + H_2O \uparrow + N_2 \uparrow}$$

For each pound of fuel undergoing perfect combustion, a known amount of gaseous products will result. Using the stoichiometric relationships resulting from chemical reactions (similar to the preceding example) and given the gross calorific value of the fuel per pound, the following relationships have been developed for the F factors.

(Eq. 6-8)

$$F_d = \frac{227.0(\%H) + 95.7(\%C) + 35.4(\%S) + 8.6(\%N) - 28.5(\%O)}{GCV} \quad \text{(metric units)}$$

$$F_d = \frac{10^6[3.64(\%H) + 1.53(\%C) + 0.57(\%S) + 0.14(\%N) - 0.46(\%O)]}{GCV} \quad \text{(English units)}$$

(Eq. 6-9)

$$F_c = \frac{20.0(\%C)}{GCV} \quad \text{(metric units)}$$

$$F_c = \frac{0.321 \times 10^6(\%C)}{GCV} \quad \text{(English units)}$$

(Eq. 6-10)

$$F_w = \frac{347.4(\%H) + 95.7(\%C) + 35.4(\%S) + 8.6(\%N) - 28.5(\%O) + 13.4(\%H_2O)}{GCV_w} \quad \text{(metric units)}$$

$$F_d = \frac{10^6[5.56(\%H) + 1.53(\%C) + 0.57(\%S) + 0.14(\%N) - 0.46(\%O + 0.21(\%H_2O))]}{GCV_w} \quad \text{(English units)}$$

Several F factors have been calculated for various types of fossil and waste fuels. It has been found that for a given type of fuel the F factor does not vary over a significantly large range. In general, it has been reported that the F_d factor can be calculated to within a ±3% deviation and the F_c factor can be calculated to within a ±5.9% deviation. The calculated factors are given in Table 6-2.

Table 6-2. F factors for various fuels[1].

Fuel Type	F_d		F_w		F_c	
	dscm/J	dscf/10^6 Btu	wscm/J	wscf/10^6 Btu	scm/J	scf/10^6 Btu
Coal:						
Anthracite[2]	2.71×10^{-7}	10,100	2.83×10^{-7}	10,540	0.530×10^{-7}	1,970
Bituminous[3]	2.63×10^{-7}	9,780	2.86×10^{-7}	10,640	0.484×10^{-7}	1,800
Lignite	2.65×10^{-7}	9,860	3.21×10^{-7}	10,950	0.513×10^{-7}	1,910
Oil[4]:	2.47×10^{-7}	9,190	2.77×10^{-7}	10,320	0.383×10^{-7}	1,420
Gas:						
Natural	2.43×10^{-7}	8,710	2.85×10^{-7}	10,610	0.287×10^{-7}	1,040
Propane	2.34×10^{-7}	8,710	2.74×10^{-7}	10,200	0.321×10^{-7}	1,190
Butane	2.34×10^{-7}	8,710	2.79×10^{-7}	10,390	0.337×10^{-7}	1,250
Wood	2.48×10^{-7}	9,240			0.492×10^{-7}	1,830
Wood bark	2.58×10^{-7}	9,600			0.516×10^{-7}	1,920
Municipal	2.57×10^{-7}	9,570			0.488×10^{-7}	1,820
Solid Waste						

[1] Determined at standard conditions: 20°C (68°F) and 760 mmHg (29.92 in. Hg)
[2] As classified according to ASTM D388-77
[3] As classified according to ASTM D388-77
[4] Crude, residual, or distillate

APPLICATION OF THE F FACTOR TO METHOD 5

In the Code of Federal Regulations, 40 CFR Part 60.46, under Test Methods and Procedures for the New Source Performance Standards (Table 6-3), emissions expressed in terms of lb/10^6 Btu are to be determined using the following formula:

(Eq. 6-11) $$E = c_s F_d \frac{20.9}{20.9 - \%O_2}$$

Table 6-3. Test methods and procedures; 40 CFR Part 60.46.

§ 60.46 Test methods and procedures.

(a) In conducting the performance tests required in §60.8 and subsequent performance tests as requested by the EPA Administrator, the owner or operator shall use as reference methods and procedures the test methods in Appendix A of this part or other methods and procedures as specified in this section, except as provided in §60.8(b). Acceptable alternative methods and procedures are given in paragraph (d) of this section.

(b) The owner or operator shall determine compliance with the PM, SO_2, and NO_x standards in §60.42, 60.43, and 60.44 as follows:

(1) The emission rate (E) of PM, SO_2, or NO_x shall be computed for each run using the following equations:

$$E = CF_d(20.9)/(20.9\%O_2)$$

Where:

E = Emission rate of pollutant, ng/J (1b/million Btu);

C = Concentration of pollutant, ng/dscm (1b/dscf);

$\%O_2$= O_2concentration, percent dry basis; and

F_d= Factor as determined from Method 19 of appendix A of this part.

(2) Method 5 shall be used to determine the PM concentration (C) at affected facilities without wet flue-gas-desulfurization (FGD) systems and Method 5B shall be used to determine the PM concentration (C) after FGD systems.

(i) The sampling time and sample volume for each run shall be at least 60 minutes and 0.85 dscm (30 dscf). The probe and filter holder heating systems in the sampling train may be set to provide an average gas temperature of (160)+/-14°C (320+/-25°F).

(ii) The emission rate correction factor, integrated or grab sampling and analysis procedure for Method 3B shall be used to determine the O_2 concentration ($\%O_2$). The O_2 sample shall be obtained simultaneously with, and at the same traverse points as, the particulate sample. If the grab sampling procedure is used, the O_2 concentration for the run shall be the arithmetic mean of the sample O_2 concentrations at all traverse points.

(iii) If the particulate run has more than 12 traverse points, the O_2 traverse points may be reduced to 12 provided that Method 1 of appendix A of this part is used to locate the 12 O_2 traverse points.

(3) Method 9 of appendix A of this part and the procedures in §60.11 shall be used to determine opacity.

(4) Method 6 of appendix A of this part shall be used to determine the SO_2 concentration.

(i) The sampling site shall be the same as that selected for the particulate sample. The sampling location in the duct shall be at the centroid of the cross section or at a point no closer to the walls than 1 m (3.28 ft). The sampling time and sample volume for each sample run shall be at least 20 minutes and 0.020 dscm (0.71 dscf). Two samples shall be taken during a 1-hour period, with each sample taken within a 30-minute interval.

(ii) The emission rate correction factor, integrated sampling and analysis procedure of Method 3B shall be used to determine the O_2 concentration ($\%O_2$). The O_2 sample shall be taken simultaneously with, and at the same point as, the SO_2 sample. The SO_2 emission rate shall be computed for each pair of SO_2 and O_2 samples. The SO_2 emission rate (E) for each run shall be the arithmetic mean of the results of the two pairs of samples.

(5) Method 7 shall be used to determine the NO_x concentration.

(i) The sampling site and location shall be the same as for the SO_2 sample. Each run shall consist of four grab samples, with each sample taken at about 15-minute intervals.

(ii) For each NO_x sample, the emission rate correction factor, grab sampling and analysis procedure of Method 3B shall be used to determine the O_2 concentration ($\%O_2$). The sample shall be taken simultaneously with, and at the same point as, the NO_x sample.

Three important points that should be made regarding application of the F factor to Method 5 are:

1. Only the dry F factor using percent O_2 for the excess air correction may be used in the calculation. The F_c and F_w factors may not be used.
2. The oxygen sample is to be obtained simultaneously with the Method 5 run at the same traverse points. This essentially requires that an additional probe be placed along with the Method 5 probe and an additional pump be used to obtain an integrated bag sample over the duration of the run. However, only 12 sample points are required. If there are more than 12 traverse points determined by Method 1, an independent integrated gas sampling train could be used to traverse 12 points in the duct simultaneously with the particulate run.
3. The procedures in 40 CFR Part 60.46 apply to new fossil-fuel fired steam generators (new sources are those constructed or modified after August 17, 1971). For existing fossil fuel steam generators, which are regulated by state standards, the state or local regulations should be checked for application of the F factor method.

OTHER USES OF F FACTORS

Other uses of the F Factor include:

1. If values for Q_S (the stack gas volumetric flow rate), and Q_H (the heat input rate), are obtained during the source test, as they often are, several cross-checks can be made by comparing various calculated F factor values with the tabulated values. Equations that can be used to do this are as follows.

(Eq. 6-13) $$F_d(\text{calc}) = \frac{Q_{sw}}{Q_H}\frac{(20.9 - \%O_2)}{20.9}$$

(Eq. 6-14) $$F_W(\text{calc}) = \frac{Q_{sw}}{Q_H}\frac{(20.9(1 - B_{wa}) - \%O_{2w})}{20.9}$$

(Eq. 6-15) $$F_c(\text{calc}) = \frac{Q_s}{Q_H}\frac{\%CO_2}{100} = \frac{Q_{sw}}{Q_H}\frac{\%CO_{2w}}{100}$$

If, after calculating F_d, F_c, or F_w, a large discrepancy exists between the calculated value and the corresponding value in the table, the original data for Q_s, Q_H, and the Orsat data should be checked. This is an easy way of conducting a material balance check.

2. Using a tabulated value for F_d, F_c, or F_w and the data obtained during the stack test for Q_s and $\%O_2$, a value of Q_H may be obtained from the equations.
3. If ultimate and proximate analyses are available, they may be used to calculate an F factor using one of the equations. The calculated value can then be checked with the tabulated values and should be within 3 to 5% agreement, depending on the type of fuel and F factor.

The F_0 factor is the ratio

(Eq. 6-16) $$F_0 = \frac{20.9}{100}\frac{F_d}{F_c}$$

and is equal to

$$F_0 = \left(\frac{20.9 - \%O_2}{\%CO_2}\right)$$

The $\%O_2$ and $\%CO_2$ are adjusted to a dry basis. A value differing from those tabulated would necessitate a recheck of the Orsat data.

ERRORS AND PROBLEMS IN THE USE OF F FACTORS

The following factors may contribute to errors in reporting emissions by using F factors:

- Deviations in the averaged or "midpoint" F factor value itself.
- Errors in the Orsat analysis and the consequent $\%O_2$ and $\%CO_2$ values.
- Failure to have complete combustion of the fuel (complete combustion is assumed in the derivation of all of the F factor methods).
- Loss of carbon dioxide when wet scrubbers are used affecting the F_d, F_c and F_w, factors.
- Addition of carbon dioxide when lime or limestone scrubbers are used, affecting the F_c factor.

As stated earlier, the deviations in the F factors themselves have been found to vary no more than about 5% within a given fuel category. Since the F factors given are averaged values, differences in the ultimate analysis between fuel samples could easily account for the deviation. Also an error of a few percent in the oxygen concentration could cause a relatively large error in the value of E, or more importantly, could mean the difference between compliance and noncompliance. A publication by Mitchell and Midgett (1976) entitled "Field Reliability of the Orsat Analyzer," states:

> "The results from five collaborative tests of the Orsat method indicate that the use of Orsat data to determine the molecular weight of flue gases is a valid procedure, but the use of such data routinely to convert particulate catches to such reference conditions as 12% CO_2 and 50% excess air may introduce sizeable errors in the corrected particulate loading…
>
> "However, since the use of Orsat data for calculating particulate conversion factors will likely continue, it seems prudent to develop procedures to check the reliability of Orsat data. One procedure, that could be instituted without affecting either the cost or time of a source test, would be to require that if the Orsat data is to be used for calculating a particulate conversion factor, then the integrated flue gas sample must be independently analyzed by at least two analysts and their results for each gas component must agree within a certain volume percent – say 0.3% – before they can be used to calculate the conversion factor."

The assumption of complete combustion is made in the derivation of all F Factor Methods. If products of incomplete combustion, such as carbon monoxide, are present in the effluent stream, the volume of effluent gas and carbon dioxide per pound of fuel burned will differ from the

values used in calculating the F Factors. However, adjustments to the measured CO_2 or O_2 concentration can be made, which would minimize this error, if the % CO is determined in the flue gas.

(Eq. 6-17) $$(\%CO_2)_{adj} = \%CO_2 + \%CO$$

(Eq. 6-18) $$(\%O_2)_{adj} = \%O_2 - 0.5\ \%CO$$

By making these adjustments, the error amounts to minus one-half the concentration of carbon monoxide present. Thus, if 1% CO (an extreme case) is %, an error of minus 0.5% is introduced. Without adjusting the CO_2 or O_2 concentration, a combustion source having 11% CO_2, 1 % CO, and 6% O_2 will result in about plus 9% error for the Fc Factor Method and about plus 3% for the Fd Factor and Fw Factor Methods.

The loss of carbon dioxide in wet scrubbing systems will also have an effect on the F factors. A 10% loss of carbon dioxide will produce an approximate 10% error in the F_c factor. Since the F_d factor (oxygen correction) is based on source combustion products, its value will also be affected by the loss of carbon dioxide. If the gas stream has 6% O_2 and 1.4% carbon dioxide is lost in the scrubber, the error will be about +2.8%. The F_w factor is not applicable after a wet scrubber since the moisture content would have to be independently determined.

In general, the greatest errors associated with the F factor method are those that would be associated with the excess air correction. Collaborative testing programs have found that such errors can range as high as 35% when emission rates are corrected to 12% CO_2 using Orsat data. Considerable effort should be given by the source sampler to obtain representative and accurate Orsat data. The use of the automated Method 3A for the determination of oxygen and carbon dioxide should help to alleviate this problem.

6.4 SUMMARY

Timing	
	00:05 Minutes

REPORT WRITING AND EMISSIONS CALCULATIONS

This chapter covered the following topics:

- The Test Report.
- Reporting in Units of the Standard: F Factor Methods.
- Derivation of the F Factor Method.
- Calculation and Tabulation of F Factors.
- Application of the F Factor to Method 5.
- Errors and Problems in the Use of F Factors.

BIBLIOGRAPHY

Aldina, G.J., and J.A. Jahnke. 1979. *Source Sampling for Particulate Pollutants*. (APTI Course 450 Student Manual). EPA 450/2-79-006. U.S. Environmental Protection Agency.

Mitchell, W.J., and Midgett, M.R. 1976. Field reliability of the Orsat Analyzer *Journal of the Air Pollution Control Association* 26(5):491.

Office of the Federal Register National Archives and Records Administration. 1992. Standards of performance for new stationary sources. *Code of Federal Regulations*, Title 40 (Protection of Environment), Part 60, Appendix A.

Shigehara, R.T., R.M. Neulicht, and W.S. Smith. 1973, July. A method for calculating power plant emissions. *Stack Sampling News 1(1):5-9.*

Shigehara, R.T., and R.M. Neulicht. 1976. *Derivation of Equations for Calculating Power Plant Emission Rates, O_2 Based Method: Wet and Dry Measurements*. U.S. Environmental Protection Agency, Office of Air Quality Planning and Standards.

Shigehara, R.T., R.M. Neulicht, W.S. Smith, and J.W. Peeler. 1976, July. *Summary of F Factor Methods for Determining Emissions*. U.S. Environmental Protection Agency, Emission Measurement Branch.

Shigehara, R.T., R.M. Neulicht, W.S. Smith, and J.W. Peeler. 1976, November. Summary of F factor methods for determining emissions from combustion sources. *Source Evaluation Society Newsletter 1(4)*.

CHAPTER 7

7.0 TOPICS IN SOURCE TEST QUALITY ASSURANCE

7.1 OVERVIEW

PURPOSE

The purpose of this chapter is to explain why the application of quality assurance techniques in source testing is central to obtaining test data that is accurate, precise, and complete. This chapter will discuss three topics in this area. The first topic, "error analysis," provides a background in the terminology associated with the evaluation of data. Types of error, accuracy, and precision are defined. The second topic, "role of the observer," discusses the functions of the source test observer who checks whether quality control methods are applied throughout the source test. The third topic, "calibration," details the calibration methods essential to obtaining good quality data.

LEARNING OBJECTIVES

At the conclusion of this training, students will be able to:

- Recognize common techniques for analyzing and identifying common errors and discrepancies.
- Identify the roles and responsibilities of Agency Observers.
- Recognize the requirements and guidelines for calibrating and measuring samples.

7.2 ERROR ANALYSIS

INTRODUCTION

The problem of accuracy in stack sampling measurements is considered and debated in almost every report or journal article that contains stack sampling data. There exists, however, a great deal of misunderstanding in the engineering community on the difference between error, precision, and accuracy. This misunderstanding often leads to a misinterpretation of analytical studies of stack sampling methods. The type of error analysis often used applies only to "randomly distributed error with a normal distribution about the true value."

It is the intention of this section to address the limitations of error analysis procedures so that experiments can be designed more carefully to yield results close to the "true" value.

DEFINITIONS

Error

The word "error" has two different meanings:

1. "Error" denotes the difference between a measured value and the "true" one. Except in a few trivial cases (such as the experimental determination of the ratio of the circumference to the diameter of a circle), the "true" value is unknown and the magnitude of the error is hypothetical. Nevertheless, this is a useful concept for the purpose of discussion.
2. When a number such as $\sigma = \pm 0.08$ is given or implied, "error" refers to the estimated uncertainty in an experiment and is expressed in terms of standard deviation, average deviation, probable error, or precision index.

Discrepancy

The term "discrepancy" refers to the difference between two measured values of a quantity, such as the difference between those obtained by two students, or the difference between the value found by a student and the one given in a handbook or textbook. The word "error" is often used incorrectly to refer to such differences.

Many beginning students suffer from the false impression that values found in handbooks or textbooks are "exact" or "true." All such values are the results of experiments and contain uncertainties. Furthermore, in experiments such as the determination of properties of individual samples of matter, handbook values may actually be less reliable than the student's because the student's samples may differ in composition from the materials that were the basis of the handbook values.

Random Errors

Sometimes when a given measurement is repeated, the resulting values do not agree exactly. The causes of the disagreement between the individual values must also be causes of their differing from the "true" value. Errors resulting from these causes are called random errors. They are also sometimes called experimental or accidental errors.

Systematic or Constant Errors

If, on the other hand, all individual values are in error by the same amount, the errors are called systematic or constant errors. For example, all the measurements made with a steel tape with a kink will appear to be too small by an amount equal to the loss in length resulting from the kink.

In most experiments, both random and systematic errors are present. Sometimes both may arise from the same source.

Determinate and Indeterminate Errors

Errors that may be evaluated by some logical procedure, either theoretical or experimental, are called determinate, while others are called indeterminate.

Random errors are determinate because they may be evaluated by application of a theory that

will be developed later. In some cases, random or systematic errors may be evaluated by subsidiary experiments. In other cases, it may be inherently impossible to evaluate the systematic errors, and their presence may be inferred only indirectly by comparison with other measurements of the same quantity employing radically different methods. Systematic errors may sometimes be evaluated by calibration of the instruments against standards. Whether the errors are determinate or indeterminate in these cases depends upon the availability of the standards.

Corrections

Determinate systematic errors and some determinate random errors may be removed by application of suitable corrections. For example, the measurements that were in error due to a kink in a steel tape may be eliminated by comparing the tape with a standard and subtracting the difference from all the measured values. Some of the random error of this tape may be due to expansion and contraction of the tape with fluctuations of temperature. By noting the temperature at the time of each measurement and ascertaining the coefficient of linear expansion of the tape, the individual values may be compensated for this effect.

1. **Precision**. If an experiment has few random errors, it is said to have high precision.

2. **Accuracy**. If an experiment has few systematic errors, it is said to have high accuracy.

Adjustment of Data

This is the process of determining the "best" or what is generally called the most probable value from the data. If the length of a table is measured a number of times by the same method, by taking the average of the measurements we can obtain a value more precise than any of the individual ones. If some of the individual values are more precise than others, then a weighted average should be computed. These are examples of adjustment of data for directly measured quantities. For computed quantities, the process may be specialized and complicated.

CLASSIFICATION OF ERRORS

Systematic Errors

1. Instrument calibration errors.
2. Personal errors. These are errors caused by the habits of individual observers. For example, an observer may always introduce an error by consistently holding his head too far to the left while reading a needle and scale having parallax.
3. Experimental conditions. If an instrument is used under constant experimental conditions (such as pressure or temperature) different from those for which it was calibrated, and if no correction is made, a systematic error results.
4. Imperfect technique. The measurement of viscosity by Poiseuille's law requires the measurement of the amount of liquid emerging from an apparatus in a given time. If a small amount of the liquid splashes out of the vessel that is used to catch it, a systematic error results.

Random Errors

1. Judgment errors. Most instruments require an estimate of the fraction of the smallest division, and the observer's estimate may vary from time to time for a variety of reasons.
2. Fluctuating conditions (e.g., temperature, pressure, line voltage).
3. Small disturbances. Examples of these disturbances are mechanical vibrations or, in electrical instruments, the pickup of spurious signals from nearby rotating electrical machinery or other apparatus.
4. Definition. Even if the measuring process were perfect, repeated measurements of the same quantity might still fail to agree because that quantity might not be precisely defined. For example, the "length" of a rectangular table is not an exact quantity. For a variety of reasons, the edges are not smooth (at least if viewed under high magnification) nor are the edges accurately parallel. Thus even with a perfectly accurate device for measuring length, the value is found to vary depending upon where the "length" is measured on the cross-section.

Illegitimate Errors

The errors discussed above are almost always present, at least to a small degree, in the very best of experiments and they should be discussed in a written report. However, there are three types of avoidable errors that have no place in an experiment, and the trained reader of a report is justified in assuming that these are not present.

1. **Blunders**. These are errors caused by outright mistakes in reading instruments, adjusting the conditions of the experiment, or performing calculations. These errors may be largely eliminated by care and by repetition of the experiment and calculations.
2. **Computation errors**. The mathematical machinery selected for calculating the results of an experiment (such as calculators or computers) should have errors small enough to be completely negligible in comparison with the natural errors of the experiment. Thus if the data are accurate to five significant figures, it is highly improper to truncate these to three figures, and then to state "calculator error" as a source of error in the report. Such a calculation should be used for calculating the results of an experiment having only three or preferably two significant figures. On the other hand, if the experiment does give five significant figures, a more sophisticated calculator or computer should be used.
3. **Chaotic errors.** If the effects of disturbances become unreasonably large – that is, large compared with the natural random errors – they are called chaotic errors. In such situations, the experiment should be discontinued until the source of the disturbance is removed.

7.3 THE ROLE OF THE AGENCY OBSERVER

INTRODUCTION

Air pollution control agency personnel who may not be directly involved in the compliance source sampling process are often called upon to evaluate source tests performed by environmental consultants or companies. Since emission testing requires that industry, at its own expense, contact highly skilled source test teams, the source test observer should be prepared to ensure that proper procedures are followed and that representative data are obtained.

The main purpose for the agency's observation of the compliance test is to determine that the test data are representative. There are other valid reasons to observe the test, such as establishing baseline conditions for future inspections. The major emphasis, however, is on the evaluation of the acceptability of the compliance test.

The seven steps an agency generally uses for establishing the compliance of a source with the agency's regulatory requirements are as follows:

1. **Familiarize**. The agency establishes contact with the source and becomes familiar with operations, emissions, and applicable regulations.
2. **Schedule source test.** This may be part of a compliance schedule of the New Source Performance Standards (NSPS).
3. **Establish methodology.** Testing requirements should be established and a testing plan developed by the agency.
4. **Final plan and test procedure development.** A pre-survey should be conducted by a member of the testing team. A pretest meeting between the agency, source representative, and test team representative should be held to develop the final test plan.
5. **Actual compliance tests.** The facility operations and testing methodology are observed.
6. **Review of test data.** Compliance and official notification are determined.
7. **Continuing enforcement of compliance.** Follow up inspections are undertaken, using data generated from source tests as a baseline for comparison purposes.

Five areas exist where problems might develop in obtaining a sample representative of the source emissions. If a question arises as to the integrity of any one of these areas, the compliance test may be considered nonrepresentative.

These five areas are as follows:

1. The process and control equipment must be operated in such a manner as to produce representative values for stack emissions.
2. The sample port and point locations must be representative of the emissions.
3. The sample collected in the sample train must be representative of the sample points.

4. The sample recovered and analyzed must be representative of the sample collected in the sample train.
5. The reported sample results must be representative of the recovered and analyzed sample.

The source test to be monitored by the observer, then, is developed and conducted by the source test team and observer in four major phases: (1) preparing and planning, (2) conducting the test, (3) recovering, transporting, and analyzing the sample, and (4) submitting the report. Discussion of these phases follows.

PREPARING AND PLANNING

In the initial phase of preparation and planning, the agency must clarify for the Source Test Team Leader and process representative all the procedures and methods to be used during the entire testing program.

The review of the compliance test protocol submitted by the plant management or test consultant will explain the intended sampling plan to the observer. Two of the more important items to be checked are any deviations from standard sampling procedures and the proposed operations of the facility during the compliance test.

Many types of processes, sampling locations, and pollutants require some modification to the standard sampling procedure. The agency must determine if the modification will give equivalent and/or greater measurement results than would be obtained with the standard method.

The other major determination to be made from the test protocol is defining what constitutes normal operation of the facility. Example checklists for power plants and electrostatic precipitators are presented in Figures 7-1 through 7-3.

Example Checklist for Power Plants

8.1 Fossil Fuel Fired Indirect Heat Exchange

Checklist for process monitor

Monitor name ___ Test date _____
Facility representative _____
Company name __
Designation of facility _____
Designation of unit being tested _____
Maximum heat input _____million Kcal/hour
__ million Btu/hour
Boiler nameplate capacity _____pounds steam/hour
Electric generator capacity _____megawatts
Induced draft fan capacity _____CFM
at _____ in. H2O and _____ °F.
Motor drive _ hp.; amps _ ; volts _____
Combustion control Automatic Hand
Type of soot blowing Continuous Period
Control of soot blowing
Automatic sequential
Hand
_____ time cycle

8.3 Fuel Input Data

Automatic weighing or metering

Counter (totalizer) reading

	Time	Coal	Oil	Gas
End Test	____	____	____	____
Begin Test	____	____	____	____
Difference	____	____	____	____
Units fed during test	____	____	____	____
Counter conversion factor	____	____	____	____
Fuel per counter unit	____tons	____gal.	____cu.ft.	
Fuel fed during test	____tons	____gal.	____cu.ft.	
Fuel sampled during test				
Number of samples	____	____	____	
Total quantity of sample	____	____	____	
Date of last calibration of automatic metering device	____	____	____	

For manual weighing or other:
(Use this space for monitoring procedure and calculations)
_____
_____
_____

Describe the a.p.c. system _____

8.2 Monitoring Fuel During Test

Note: fuel feed measuring devices may be some distance from other instrumentation to be monitored.

Coal (classified by ASTMD 388-66)
Bituminous Sub-bituminous Anthracite Lignite
Coal feel measured by
Automatic conveyor scale
Batch weighing – dumping hoppers
Other (describe) _____
None
Liquid fossil fuel
Crude Residual Distillate
Liquid fuel feed measured by
Volumetric flow meter, make _____ model _____
Other (describe) _____
None
Gaseous fossil fuel
Natural gas Propane Butane
Other
Gaseous fuel feed measured by
Volumetric flow meter, make _____ model _____
Other (describe) _____
Other fuel (describe) _____
Other fuel feed measured by _____
_____

8.4 Fuel Analysis

Proximate analysis - as fired solid and liquid fuels

Component	% by weight Typical	This test
Moisture	_____	
Ash	_____	
Volatile matter	_____	
Fixed carbon	_____	
Sulfur	_____	
Heat value, Btu/lb	_____	

or ultimate analysis - which includes the proximate analysis plus the following

Nitrogen	_____	
Oxygen	_____	
Hydrogen	_____	

Figure 7-1. Observer's checklist.

Example Checklist for Power Plants

8.5 Monitoring Btu Input by Heat Rate of Boiler-Generator Unit and Kw-hr Output Meter when Applicable

Purpose is to serve as a check on other calculation procedures.
Boiler generator heat rate _____ Btu/kw-hr. Heat rate is obtained from Facility Representative. The heat rate curve is more accurate if corrections for super heat temperature, reheat temperature, and condenser back pressure are applied for the test lead condition.

Record data from generator output meter

	Meter reading Time	Kw-hr Output
End test	_____	_____
Begin test	_____	_____
Difference		

Kw-hrs. generated during test _____
Btu imput during test =
Kw-hrs. generated X heat rate (Btu/Kw-hr.)
Btu imput during test =
_____ x . = Btu

8.7 Other Instrumental Data

Exhaust gas temperature just before the a.p.c. device
Max _____ °F Min _____ °F Avg _____ °F

Draft	**Primary Collector**	**Secondary Collector**
Before control device	____ in.H_2O	____ in.H_2O
After control device	____ in.H_2O	____ in.H_2O

Combustion recorders (indicate those available)
CO_2 Opacity
O_2 NO_x
SO_2

Obtain copy of recorders available and mark beginning and ending time of test.
· Soot blowing
Was soot blowing to be included in the test period
No Yes
If yes, record time and duration of the soot blowing. _____
_____
· Special observations of any unusual operating conditions
_____
_____
_____

8.6 Monitoring Steam Generator Output By Steam Flow Meter

(Usually combined with air flow)

Steam flow measured by
Integrator on steam flow meter

8.8 Electrostatic Precipitator - Checklist for Control Device Monitor

Parameters of design and operation affecting performance

Monitor name ___ Test date _____
Design efficiency _____

Integrating chart from recorder
Calibration date __
Primary purpose of stream flow monitoring is to indicate the load on the boiler during the test to observe and communicate to test team leader sudden significant change in stream flow which would be accompanied by significant change is gas flow. Steam flow and flue gas flow changes parallel each other closely.

Record data by integrator on steam flow meter

	Time	Integrator	Reading
End test	_____	_____	_____
Begin test	_____	_____	_____
Difference			

Alternate factor __
Total steam flow during test _____ pounds

Steam chart
Mark beginning and end of test runs on the steam chart and request a copy.
Chart marked and copy received.

Rectifier power output	Design	During test
Voltage, kilowatts	_____	_____
Current, milliamps	_____	_____
Sparking rate, sparks/min	_____	_____
Gas volume, acfm	_____	_____
Gas velocity, fps	_____	_____
Gas temperature, °F	_____	_____
Fan motor, amperes	_____	_____
Electrical fields in direction of flow		_____
Number of rappers in direction of flow		_____

Other method of cleaning plates _____
_____
ESP rapping sequence
Normal _____
_____
During test ____
_____
Hopper ash removed sequence
Normal _____
Notes of unusual conditions during test
_____
_____
_____

Figure 7-2. Observer's checklist (continued).

8.9 Scrubber Checklist for Control Device Monitor

Parameters of design and operation affecting performance

Monitor name ___ Test date _____
Type of scrubber
Venturi Plate Other _____
Turbulent bed Spray
Design efficiency _____

	Design	During test
Pressure drop across scrubber, in H_2O	_____	_____
Nozzle pressure, pounds/sq in.	_____	_____
Gas volume flow out of scrubber, cfm	_____	_____
Fan motor, amperes	_____	_____
Liquid flow rate to scrubber gal.min	_____	_____
Liquid/gas rates, L/g	_____	_____
Recirculation of scrubbing liquid	_____	_____
Gas temperature of scrubber	_____	_____

Preconditioning or dilution air _____
_____
During test ____
_____
Hopper ash removed sequence
Normal _____
Rates of unusual conditions during test _____
_____

8.10 Fabric Filter - Checklist for Control Device Monitor

Parameters of design and operation affecting performance

Monitor name ___ Test date _____

Pressure drop across Collector in H_2O	Design	During test
Just after bag cleaning	_____	_____

8.11 Cyclone/Multicyclone – Checklist for Control Device Monitor

Parameters of design and operation affecting performance

Monitor name ___ Test date _____
Design efficiency _____

	Design	During test
Pressure drop across Collector in H_2O	_____	_____
Gas volume, acfm	_____	_____
Gas temperature °F	_____	_____
Fan motor, amperes	_____	_____

Is the collector sectionalized with dampers for control of
Δp NoYes
If yes, how were dampers positioned during test? _____
_____
Hopper ash removed sequence
Normal _____
_____
During test ____
_____
Notes of unusual conditions during test _____
_____
_____
_____

Just before bag cleaning _____ _____
Gas volume to bag house, acfm _____ _____
Fan motor, amperes _____ _____
Type of cleaning
Shaking - number of compartments _____
Reverse air flow - number of compartments _____
Repressuring - number of compartments
_____
Pulse jet (cleaned while on stream) _____
Other _____
Cleaning cycle
Normal _____
_____
During tests ___
_____
Particulate removal sequence
Normal _____
_____
During test ____
_____

Notes of unusual conditions during test _____
_____
_____
Preconditioning or dilution air _____
_____

Figure 7-3. Observer's checklist (continued).

The plant representative should understand and agree to all facility baseline conditions prior to the compliance testing, since the determination of representative operation of the facility is for the protection of both the regulatory agency and the plant. The plant representative may suggest additional factors that could be considered as an upset condition that would not produce representative emissions.

The observer must be familiar with the process to be sampled. Whenever possible, the agency field inspector should be the observer for the process and control equipment. If the process is large or complicated, the observer may be aided by a process control engineer from the agency. An emission test run at the wrong process rating or without sufficient process data will not constitute a valid test. Familiarity with the specific process can be acquired through one or more of the many inspection manuals prepared by the Environmental Protection Agency for this purpose. These manuals indicate the methods and devices employed in monitoring process rates and/or weights.

CONDUCTING THE TEST

Some compliance tests may be routine enough that a pretest meeting on the morning before sampling begins will be sufficient to provide a complete understanding between all parties involved.

The review of the team leader's test protocol should have initiated the formulation of the observer's sampling audit plan. The observer's audit plan should contain the tentative testing schedule, facility baseline conditions preparation or modification of observer's check-list, and details for handling irregular situations that could occur during emission testing.

The sample testing schedule should allow the observer to plan his/her duties in a logical order and should increase his/her efficiency in obtaining all of the required data.

The observer's testing forms normally should need little modification. Any accepted modification to the normal sampling procedure should be covered by additional checks from the observer.

The observer should be prepared to handle any nonroutine situations that could arise during sampling procedures. A list of potential problems and their solutions should be made before the actual testing. The list should include minimum sampling requirements and process operating rates. The observer should also know who in his/her organization is authorized to make decisions that are beyond his/her own capability or authority.

The number of agency personnel observing the performance test must be adequate to ensure that the facility operation (process and control equipment) is monitored and recorded as a basis for present and future evaluations. The observing team should be able to obtain visible emission readings and transmissometer data for comparison with measured emission rates and should be able to ensure that the prescribed agency testing methodology was followed.

The plant representative should be available during testing to answer any questions that may arise about the process or to make needed process changes. It should be understood that, if any problems arise, all three parties-the test team, Plant Operators, and Agency Observer-are consulted. Since the observer may approve or disapprove the test, his/her intentions should be stated at the pretest meeting.

Before actually proceeding with the test, the observer should check the calibration forms for the specific equipment to be used. As a minimum, these forms should cover the following equipment:

1. Pitot tube
2. Nomograph (if used)
3. Dry gas meter
4. Orifice meter

If there is any question as to whether proper calibration procedures were followed, the problem should be resolved before initiating the test. Sampling checklists to use before and during the test are provided in Figure 7-4.

During the test, the outward behavior of the observer is of utmost importance. The observer should perform his/her duties quietly, thoroughly, and with as little interference and conversation with the source test team as possible. He/she should deal solely with the test supervisor and plant representative or have a clear understanding with them should it become necessary to communicate with the source test technicians or plant operators. Conversely, the observer should exercise caution in answering queries from the source test team technicians and plant operators directly and refer such inquiries to their supervisor. He/she should, however, ensure that sampling guidelines are adhered to and inform the test team if errors are being made.

Several checks must be made by the observer to ensure adherence to proper sampling procedures. To eliminate the possibility of overlooking a necessary check, an observer's checklist should be used for the sampling procedures and facility operation.

8.12 General/Sampling Site

Stack/dust cross section dimensions _____
equivalent diameter _____
Material of construction _____ corroded? _____ Leaks? _____
Internal appearance: corroded? _____
caked particulate? _____ thickness _____
Insulation? _____ thickness _____ lining? _____ thickness _____
Nipple? _____ I.D. _____ length _____ flush with inside wall? ___
Straight run before ports _____ diameters _____
Straight run after ports _____ diameters _____
Photos taken? ___ of what _____

Drawing of sampling location:

Minimum information on drawing: stack/duct dimensions, location, and description of major disturbances and all minor disturbances (dampers, transmissometers, etc.) and cross sectional view showing dimensions and port locations.

8.13 Run Assembly/Final Preparations

(Use one sheet per run if necessary) Run # _____

Filter holder clean before test? _____
Filter holder assembled correctly? _____
Probe liner clean before test ? _____ nozzle clean? _____
nozzle undamaged? _____
Impingers clean before test? _____
impingers charged correctly? ___
Ball or screw joints? _____ grease used? _____ type of grease _____
Pitot tube tip undamaged? _____
pitot lines checked for leaks? _____ plugging? _____
Meter box leveled? _____ pitot manometer zeroed? _____
orifice manometer zeroed? _____
Probe marking correct? _____ probe hot along entire length? _____
Filter compartment hot? ____ temperature information available? ___
impingers iced down? _____ thermometer reading properly? _____
Barometric pressure measured? ___ if not, what is source of data ____
$\Delta H_@$ from most recent calibration. _____
$\Delta H_@$ from check against dry gas meter. _____
Nomograph check:
If $\Delta H_@ = 1.80$, $T_m = 100°F$, $\%H_2O = 10\%$, $P_s/P_m = 1.00$,
C = 0.95(0.55)
If C = 0.95, $T_s = 200°F$, $D_n = 0.375$, $\Delta p_{reference}$ = 1.17(0.118)
Align $\Delta p = 1.0$ with $\Delta H = 10$; $\Delta H_@ = 0.01$, ΔH = 0.1(0.1)
For nomograph set-up:
Estimated meter temperature _____ °F estimated
value of P_s/P_m _
Estimated moisture content _____ % bow estimated? _____
C factor _____ estimated stack temperature _____ °F
desired nozzle diameter _____
Stack thermometer checked against ambient temperature? _____
Leak-test performed before start if sampling? ____
Rate _____ cfm. @ _____ in. Hg

8.14 General/Sampling System

Sampling method (e.g., EPA 5) _____

Modifications to standard method _____
_____
Pump type: fibervane with in line oiler _____
carbon vane ____ diaphragm _____
Probe liner material _____ heated _____ entire length _____
Type S pitot tube? _____ other _____
Pitot tube connected to: inclined manometer _____
or magnehelic gauge _____
range _____ approx. scale length _____ divisions _____
Office meter connected to: inclined manometer _____
or magnehelic gauge _____ range _____
approx. scale length _____ divisions _____
Meter box brand _ sample box brand _____
Recent calibration of orifice meter-dry gas meter? _____
pitot tubes ____ nozzles ____
thermometers or thermocouples? ____ magnehelic gauges? _____
Number of sampling points/traverse from Fed. Reg._____
number to be used _____
Length of sampling time/point desired _____
time to be used _

8.15 Sampling

(Use one sheet for each run if necessary) Run # _____

Probe-sample box movement technique:
Is nozzle sealed when probe is in stack with pump turned off? _____
Is care taken to avoid scraping nipple or stack wall? _____
Is an effective seal made around probe at port opening _____
Is probe seal made without disturbing flow inside stack? _
Is probe moved to each point at the proper time? _____
Is probe marking system adequate to properly locate each point? _____
Was nozzle and pitot tube kept parallel to stack wall at each point? _____
If probe is disconnected from filter holder with probe in the stack on a negative pressure source, how is particulate matter in the probe prevented from being sucked back into the stack? ____
If filters are changed during a run, was any particulate lost? _____
Meterbox operation:
Is data recorded in a permanent manner _____
Are data sheets complete? _____
Average time to reach isokinetic rate at each point _____
Is nomograph setting changed when stack temperature changes significantly? _____
Are velocity pressures (Δp) read and recorded accurately _____
Is leak-test performed at completion of run? ___ cfm___ °___in. Hg
Probe, filter holder, impingers sealed adequately after test? ____
General content on sampling techniques _____
If Orsat analysis is done, was it: from stack _____
from integrated bag? _____
Was bag system leak-tested? _____ was Orsat
Leak-tested? _ check against air? _____
If data sheets cannot be copied, record: approximate stack temperature __ °F.
nozzle dia. ___ in. volume metered _____ ACF
first 8 Δp readings ____ ____ ____ ____ ____ ____ ____ ____

Figure 7-4. Sampling checklist.

To understand the relative importance of the measurement of parameters of emission testing, the observer should know the significance of errors. A discussion of errors is given in a preceding section of this chapter.

Generally, it is best to have two Agency Observers at the source test. If only one observer is present, however, the following schedule should be followed.

For the first Method 5 run, when the facility is operating in the correct manner, the observer should go to the sampling site and observe the sample train configuration and the recording of the initial data. The observer should oversee the initial leak-check (and the final post-test leak-check). When the observer is satisfied with the sample train preparation, the test may be started. The sampling at the first port and the change-over to the second port should be observed. If satisfied with the tester's performance, the observer should go to a suitable point from the stack and read visible emissions for a six-minute period.

The facility operations must then be checked. This includes data from fuel flow meters, operating monitors, fuel composition, F factors, and so on. The data from continuous emissions monitoring equipment, such as opacity monitors and sulfur dioxide analyzers, should also be checked. This data will be useful in evaluating the Method 5 data. If the process and control equipment have operated satisfactorily and the data has been recorded as specified, the observer should make another visible emission reading for six minutes, then return to the sample site to observe the completion of the test. The final readings and the leak-check after the completion of the test are two of the more important items to be checked. The transport of the sample train to the cleanup area and the sample recovery should then be observed.

If the observer is satisfied with all sampling procedures during the first run, the second run time will be spent observing the process monitors and checking the sampling team at the end of the sampling period. During the second run, two six-minute visible emission readings should be made with a check of the facility operations between readings. The observer should be satisfied that the facility data recorded are truly representative of the facility operations.

A visual observation of the particulate buildup on the filter and in the acetone rinse from the first two tests should be correlated to the visible emission readings or transmissometer data. This comparison of particulate collected will be valid only if the sample volumes were approximately the same. If the particulate catch on the filter and in the acetone rinse for the second test was consistent or greater than the visible opacity correlated to the first run, then the observer might need to spend more time overseeing the facility operations. If the second run, when correlated to the opacity, is less than the first test, more time might be spent in observing the emission test procedures for the third run.

Regardless of the main emphasis of the third run, the observer should still perform certain observations. The observer again should check all facility operations before testing. Two six-minute visible emission readings should be made with a check of the facility operation in between. The sample recovery of all tests should be witnessed, and the apparent particulate catch compared to the opacity readings. The observer can spend any additional time checking suspected weak points or problem areas.

RECOVERING, TRANSPORTING, AND ANALYZING THE SAMPLE

The observer should be present during sample recovery. It is imperative that the sample

recovery and analysis be done under standard procedures. Each step should be thoroughly documented in case the results are used as evidence in court. (Courts have specific rules regarding evidence, which are contained in the Rules of Evidence.) Therefore, the observer should have a sample recovery checklist to ensure that all tasks have been performed properly.

To reduce the possibility of invalidating the results, all the particulate matter must be carefully removed from the sampling train and placed in sealed, nonreactive, numbered containers. It is recommended that the samples be delivered to the laboratory for analysis on the same day that the sample is taken. If this is impractical, the samples should be placed in a carrying case (preferably locked) in which they are protected from breakage, contamination, loss, or deterioration.

The samples should be properly marked to ensure positive identification throughout the test and analysis procedures. The Rules of Evidence require impeccable identification of samples, analysis of which may be the basis of future evidence. An admission by a lab analyst that he/she could not be positive whether sample 6 or sample 9 was analyzed, for example, could destroy the validity of an entire report.

Positive identification also must be provided for the filters used in any specific test. All identifying marks should be made before taring. Three or more digits should suffice to ensure the uniqueness of a filter for many years. The ink used for marking must be indelible and unaffected by the gases and temperatures to which it will be subjected. If any other method of identification is desired, it should be kept in mind that the means of identification must be positive and must not impair the function of the filter.

Finally, each container should have a unique identification to preclude the possibility of interchange. The number of a container should be recorded on the analysis data sheet associated with the sample throughout the test and analysis.

Samples should be handled only by persons associated in some way with the task of analysis. A good general rule to follow is “the fewer hands the better,” even though a properly sealed sample may pass through a number of hands without affecting its integrity.

It is generally impractical for the analyst to perform the field test. The Rules of Evidence, however, require that a party be able to prove the chain of custody of the sample. For this reason, each person must document from whom the sample was received and to whom it was delivered. This requirement is best satisfied by having each recipient sign a standard chain-of-custody sheet initiated during the sample recovery.

To preclude any omissions of proper procedures after the sample recovery, the observer should have a sample transport and analytical checklist as shown in Figure 7-5.

Example Sample Recovery Checklist

General environment - clean up area _____
Wash bottles clean? ____ brushes clean? ____ brushes rusty _____
Jars clean? ____ acetone grade _____ residue on evap. spec. _____
Filter handled ok? _____ probe handled ok? _____
impingers handled ok? _____
After cleanup: filter holder clean _____ probe liner clean? _____
nozzle clean? ____ impingers clean? _____ blanks taken _____
Description of collected particulate _____
Silica gel all pink? run 1 _____ run 2 _____ run 3 _____
Jars adequately labeled? _____ jars sealed tightly?_____
Liquid level marked on jars? _____ jars locked up?_____
General comments on entire sampling project:

_____
_____
_____
_____

Was the test team supervisor given the opportunity to read over this
checklist? _____
Did he do so?
Observer's name _____ title _____
Affiliation _____ signature _____

Figure 7-5. Sample recovery checklist.

Potential sources of error in the analysis may originate from contamination of the sample, or problems with the analyzing equipment, procedures, or documentation of results. Since the analysis is often performed at a lab distant from the plant site, the observer is often not present at the sample analysis. If there is any question in the observer's mind about the analyst's ability to adhere to good analytical practices in analyzing and in reporting data, the observer has two recourses: he may be present during analysis or he/she may require a certified laboratory. This is, however, an unnecessary burden and should not be done as a general rule.

During the analysis, any remaining portions of the sample should remain intact and placed in a safe place until the acceptance of the final report. Laboratory equipment, especially the analytical balance, should be calibrated immediately before the sample weighing. The laboratory data and calculations must be well documented and kept in such a manner that the agency can inspect the recording of any analysis upon request.

As noted in the lectures for this course, the observer should be aware of analytical tricks that can be used to bring a marginal test to within ±10% of 100% isokinetic. Care should be taken that the values for the nozzle diameter and C_p do not change. Also, the weight of the impinger catch and the silica gel for the determination of B_{ws} should not be changed to accommodate a percent isokinetic value. It has been suggested that to ensure an unbiased test, the observer could supply the source tester with his/her own preweighed filter and preweighed amount of silica gel. Although extreme, this precaution may be necessary in special cases.

SUBMITTING THE REPORT

Upon completion of the compliance field test work, the observer can begin the final task of determining the adequacy of the compliance test data. The observer will be required to write an observer's report for attachment to the source tester's report. The facility operation, the data,

and the field checklists should provide the observer with sufficient information to determine the representativeness of the process and control equipment operation and the sample collection. All minimum conditions should have been met. If the observer suspects a bias in the results, this bias should be noted. A resulting bias that can only produce emission results higher than the true emissions would not invalidate the results if the plant were determined to be in compliance. Therefore, any bias that may occur should be listed along with the suspected direction of the bias.

The test team supervisor is responsible for the compilation of the test report and is usually under the supervision of a senior engineer who reviews the report for content and technical accuracy. Uniformity of data reporting will enable the agency to review the reports in less time and with greater efficiency. For this reason, a report format should be given to the test team supervisor along with the other agency guidelines.

The first review of the test report should be made by the observer. The observer should check all calculations and written material for validity. One of the greatest problems in compliance testing is in the calculation errors made in the final report. Several agencies have gone to the extreme of having the observer recalculate the results from the raw data to find any errors more easily. Errors should be noted along with comments by the observer. Although the conclusions in the observer's report are not the final authority, they should carry the greatest amount of weight in the final decision concerning the representativeness of the test.

Because of the importance of the observer's report and the possibility that it may be used as evidence in court, the observer should use a standard report format that will cover all areas of representativeness in a logical manner. An example of an observer's report format is presented as Table 7-1.

Table 7-1. Observer's report format.	
Cover 1. Plant name and location (Federal AQCR) 2. Source sampled 3. Date sampled 4. Testing firm 5. Control agency **Certification** 1. Certification by observer(s) 2. Certification by author if not observer 3. Certification by key agency personnel **Introduction** 1. Agency name 2. Purpose for observer's report 3. Purpose for test 4. Plant name, location, and process type 5. Test dates 6. Pollutants tested 7. Applicable regulations 8. Agency sections and personnel directly involved	**Facility Operation** 1. Description of process and control device 2. Baseline conditions 3. Observer's facility data (checklists) 4. Representativeness of process and control device 5. Baseline conditions for agency inspector **Sampling Procedures** 1. Acceptability of sample port and point locations 2. Compliance test protocol 3. Calibration of sampling equipment 4. Observer's sampling data (checklist) 5. Representativeness of sampling 6. Observer's sample recovery data (checklist) 7. Representativeness of recovered sample 8. Observer's analytical data 9. Representativeness of sample compliance
Summary of Representativeness of Data 1. Compliance test protocol 2. Calibration of sampling equipment 3. Process data 4. Control equipment data 5. Sampling procedures 6. Analytical procedures 7. Compliance test report	**Test Report** 1. Introduction 2. Summary of results 3. Facility operation 4. Sampling procedures 5. Appendices **Appendices** A. Copy of pertinent regulations B. Related correspondence C. Compliance test protocol D. Observer's checklists E. Observer's test log

In addition to the determination of representative data for the compliance test, the observer should report all conditions under which the facility must operate in the future to maintain its conditional compliance status. These conditions will be reported to the facility as conditions of its acceptance.

These reports and the conditions of the compliance acceptance will provide any agency 201 with sufficient data to conduct all future facility inspection trips.

7.4 CALIBRATION

INTRODUCTION

Source sampling equipment must be properly calibrated before it is used in the field. Systematic errors will result throughout the testing procedure as a result of uncalibrated or improperly calibrated equipment. Without calibration, the stack tester cannot sample isokinetically in any source test, and he/she cannot correct the mass emission rate data if the equipment is calibrated after the test. It is therefore crucial that the apparatus used for stack testing be carefully checked. A manufacturer's calibration value or guarantee should not be trusted. It is not uncommon for a vendor to supply a miscalibrated apparatus. Also, with frequent use, instrument calibration values may change.

A careful source tester always double-checks his/her apparatus. Weeks of work may otherwise be questioned or may need to be redone. This section gives calibration procedures and design specifications for equipment commonly used in the source test. The procedures should be followed after receipt of new equipment and should be repeated after periods of extended use.

The Quality Assurance Handbook Volume III – Part II (http://www.epa.gov/ttn/emc/email.html#qaqc) summarizes field procedures, field data sheets, laboratory procedures, laboratory data sheets, calibration procedures, and calibration data sheets for 78 methods. A copy of the table is provided below for Methods 1 through 5. Clicking in a cell in the online document will display the specific information referenced in the table.

Table 7-2. Quality Assurance Handbook Volume III, Sept 1994. Table of Procedures and Data Sheets.

Method	Description	Summary Sheet	Field Procedure	Field Data Sheet	Laboratory Procedure	Laboratory Data Sheet	Calibration Procedure	Calibration Data Sheet
1	Sample and Velocity Traverses		1	1				
	Flow Verification/Alternative Site		1a	1a, 1b				
1A	Sample and Velocity Traverses - Small Ducts		1A	1A				
2	Velocity/Volumetric Flow Rate	2	2	2				
	Type S pitot Tube Inspection						2	2
	Leak- check of Pitot Tube System		2a					
	Type S Pitot Tube						2a	2a, b, c
	Barometric Pressure		2b					
	Barometer						2d	2d
	Temperature Sensors						2e	2d
	Pressure Sensors						2f	2d
2A	Direct Volume Flow Rate - Small Ducts	2A	2A	2A				
	Metering System						2A	2A
2B	Volume Flow Rate - Gasoline Vapor Incinerators	2B	2B	2B				
2C	Volume Flow Rate - Small Ducts (Std Pitot)	2C	2C					
2D	Volume Flow Rate - Small Pipes and Ducts	2D	2D	2D				2D
3	Dry Molecular Weight		3	3				
	Leak-Check of Orsat Analyzer		3a					
	Leak-check of Flexible Bags		3b					

	Leak check of Non-Isokinetic Sampling Trains		3c					
3A	Oxygen and Carbon Dioxide	3A	3A	6C				6C, 6Ca
3B	Emission Rate Correction Factor or Excess Air		3B	3B				
4	Moisture (Reference)		4	4				
	Moisture (Approximation)		4a	4a				
5	Particulate Matter	5	5	5	5	5		
	Leak Check of Isokinetic Sampling Train		5a					
	Leak-check of Metering System (After Pump)		5b					
	Metering System/Orifice Check		QC5					
	Metering System						5	5
	Metering System - Critical Orifices						5a	
	Probe Nozzle						5b	5b
	Dry Gas Meter as Calibration Standard						5c	5c
	Critical Orifices as Calibration Standards						5d	5d
5A	Particulate Matter - Roofing Operations	5A	5A	5	5A	5A		
5B	Nonsulfuric Acid Particulate Matter	5	5B	5	5B	5		
5D	Positive Pressure Fabric Filters	5	5D	5	5	5		
5E	Wool Fiberglass Insulation Manufacturing	5E	5E	5	5E	5E		
5F	Nonsulfate Particulate Matter	5F	5F	5	5F	5F		
5F (alt)	Nonsulfate Particulate Matter	5Fa	5F	5	5Fa	5Fa		

CALIBRATION OF THE SOURCE SAMPLING METER CONSOLE

The gas meter and orifice meter of a sampling console may be calibrated during one procedure. The calibration described in this section may be performed using a standardized dry gas test meter or wet test meter. The sampling console must be thoroughly leak-tested before calibration.

Calibration Equipment

Equipment used in the calibration process is as follows:

1. Calibrated test meter
    a. Wet test meter (correction factor should be 1.0 for wet test meter)
    b. Standardized dry gas test meter
2. Sampling meter console
    a. Dry gas meter
    b. Orifice meter
3. Stopwatch
4. Leak-free pump (fiber vane, preferably)
5. Vacuum tubing
6. Swagelok connections
7. Leak-test liquid

METER CONSOLE LEAK-TEST

The meter console pump, dry gas meter, and orifice meter must be leak-tested before calibration. This leak-test can be accomplished by individually testing each piece of equipment or by leak-testing the entire assembly. The reference method suggests a procedure for leak-testing the assembled pump, dry gas meter, and orifice configuration (Figure 7-6). The procedure that follows, however, does not apply to diaphragm pumps.

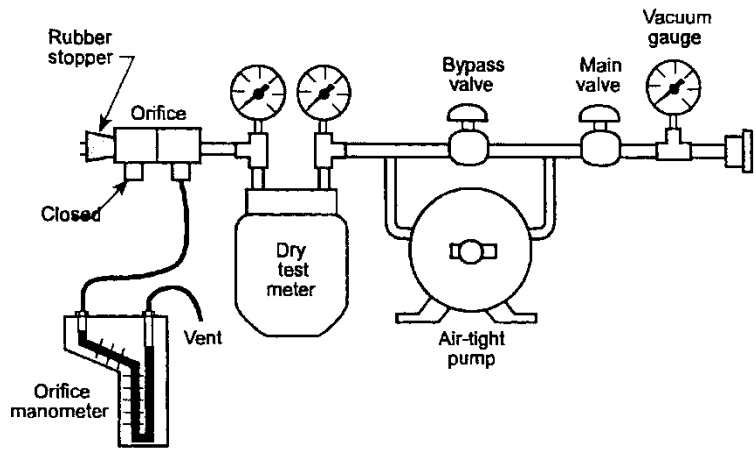

Figure 7-6. Leak-check for the Method 5 meter console.

1. Plug the orifice meter outlet with a one-hole rubber stopper that has a rigid tube through the hole.
2. Attach a length of rubber tubing (an in-line toggle valve in the tubing would be helpful).
3. Disconnect the static pressure side tubing of the orifice manometer and close off the tube. Leave the static tap of the manometer open to a vent position.
4. Completely open the bypass valve by turning it counterclockwise to a locked position; close the coarse adjustment valve.
5. Blow into the rubber tubing, plugging the orifice until the manometer shows a pressure differential greater than 6 in. H_2O.
6. Seal the tubing (close toggle valve). The manometer reading should remain stable at least one minute.
7. If a leak occurs, completely disconnect the orifice manometer and seal the orifice meter. Pressurize the system using a small pump and find the leak with a leak-test solution.

Meter consoles with diaphragm pumps can be leak-checked by pulling an air sample through a wet test meter-pump-dry gas meter setup. The leak rate should not exceed 0.0057 m^3/min (0.02 cfm).

METER CONSOLE CALIBRATION

The meter console calibration is accomplished with the equipment assembled as shown in Figure 7-7.

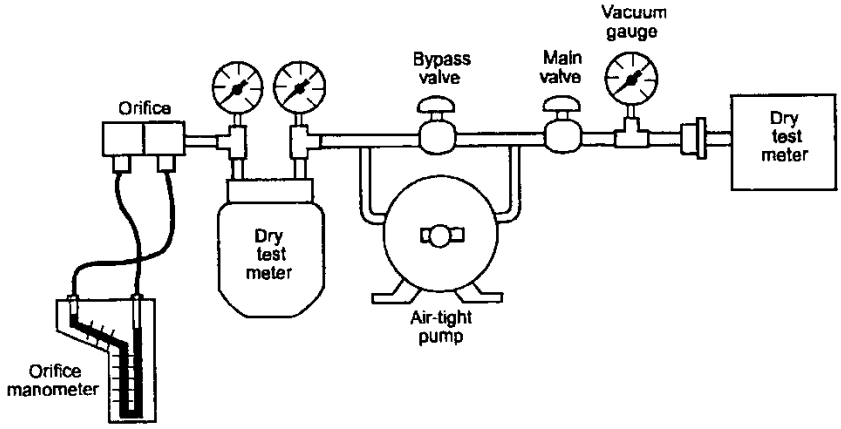

Figure 7-7. Meter console calibration assembly.

The wet test meter should have a correction factor of 1. (A standardized dry gas meter may also be used to calibrate the meter console.) The calibration of the meter console dry gas meter and orifice meter is accomplished by passing a known volume of dry air through the test meter at a number of different pressure differentials on the orifice manometer.

In the calibration procedure:

1. Establish a pressure differential (AH) across the orifice meter with the pump and the coarse and fine adjustment valves.
2. Accurately record the dial readings for the wet test meter and dry gas meter while simultaneously starting a stopwatch.
3. Draw a predetermined volume of air (e.g., 5 ft^3) through the test meter. Record all temperatures during the calibration run.
4. Stop the pump when the predetermined volume has been reached on the wet test meter; simultaneously record the total elapsed time.
5. Make all calculations on the calibration form for this procedure.

Note: The standard temperature given by APTD-0576 (70°F) has been changed to 68°F, although the publication itself does not reflect this change.

METER CONSOLE CALIBRATION USING CRITICAL ORIFICES

As stated in Section 16.2 of Method 5, critical orifices may be used as calibration standards in place of the wet test meter discussed above (see the Calibration of the Source Sampling Meter Console Section), provided that they are selected, calibrated and used according to the

requirements in the reference method. The orifices must be selected to bracket the expected operating range, and adapted to the Method 5 type sampling train as shown in Figure 7-8. The system should be leak-checked in accordance with the reference method.

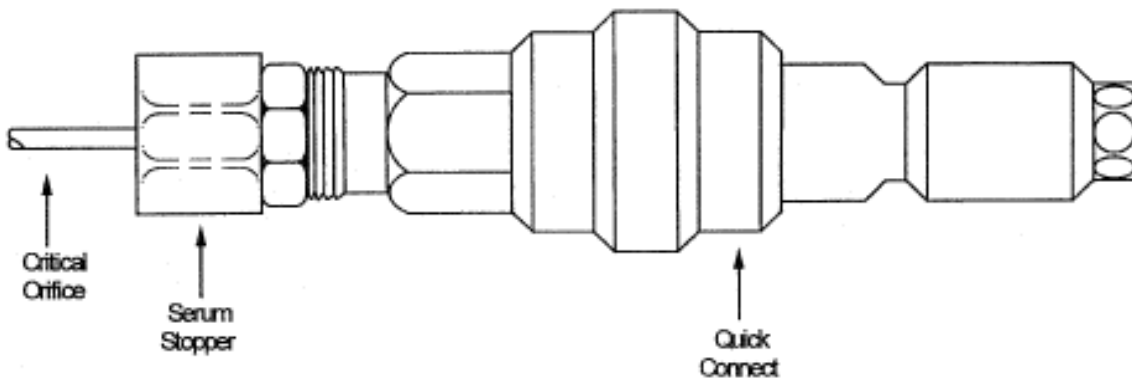

Figure 7-8. Adaptation of critical orifice to Method 5 system.

Calibration of Critical Orifices

The procedure below was summarized from Section 16.2.2.2 of Method 5. The complete procedure is provided in Section 16.2 of Method 5.

1. Allow a warm-up time of 15 minutes. This step is important to equilibrate the temperature conditions through the meter.
2. Leak-check the system.
3. Before calibrating the critical orifice, determine its suitability and the appropriate operating vacuum as follows: Turn on the pump, fully open the coarse adjust valve, and adjust the by-pass valve to give a vacuum reading corresponding to about half of atmospheric pressure. Observe the meter box orifice manometer reading, ΔH. Slowly increase the vacuum reading until a stable reading is obtained on the manometer. Record the critical vacuum for each orifice. Orifices that do not reach a critical value shall not be used.
4. Record the barometric pressure, P_{bar}.
5. Conduct duplicate runs at a vacuum of 25 to 50 mm Hg (1 to 2 in. Hg) above the critical vacuum. Record the data.
6. Calculate K' using Equation 7-1.

(Eq 7-1) $$K' = \left[K_1 V_m Y (P_{bar} + \Delta H / 13.6) T_{amb}^{\frac{1}{2}}) / P_{bar} T_m \Theta \right]$$

Where:
K' = Critical orifice coefficient, $[(m^3)(°K)^{1/2}]/[(mm\ Hg)(min)]$ $\{[(ft^3)(°R))^{1/2})][(in\ Hg)(min)]\}$
T_{amb} = Absolute ambient temperature

7. Calculate the arithmetic mean of the K' values. The individual K' values should not differ by more than ±0.5 % from the mean value.

Using the critical orifices as calibration standards:

1. Record the barometric pressure.
2. Calibrate the metering system according to the procedure outlined in steps 1-7 above.
3. Calculate the standard volumes of air passed through the meter and the critical orifices, and calculate the meter calibration factor, Y, using the equations below.

(Eq 7-2) $$V_{m(std)} = \left[K_1 V_m (P_{bar} + (\Delta H / 13.6))\right] / T_m$$

(Eq 7-3) $$V_{cr(std)} = K_1 (P_{bar}\, \Theta) / \left(T_{amb}^{1/2}\right)$$

(Eq 7-4) $$Y = V_{cr(std)} / V_{m(std)}$$

Where:
Vcr(std) = Volume of gas sample passed through the critical orifice, corrected to standard conditions, dscm (dscf)

K1 = 0.3858 K/mm Hg for metric units, 17.64 °R/in Hg for English units.

4. Average the calibration values for each of the flow rates. The calibration factor, Y, at each of the flow rates should not differ by more than ±2% from the average.
5. To determine the need for recalibrating the critical orifices, compare the Y factors obtained from two adjacent orifices each time the meter is calibrated. For example, when checking orifice 13/2.5, use orifices 12/10.2 and 13/5.1. If any critical orifice yields a Y factor differing by more than 2% from the others, recalibrate the critical orifice according to steps 1-7 above.
6.

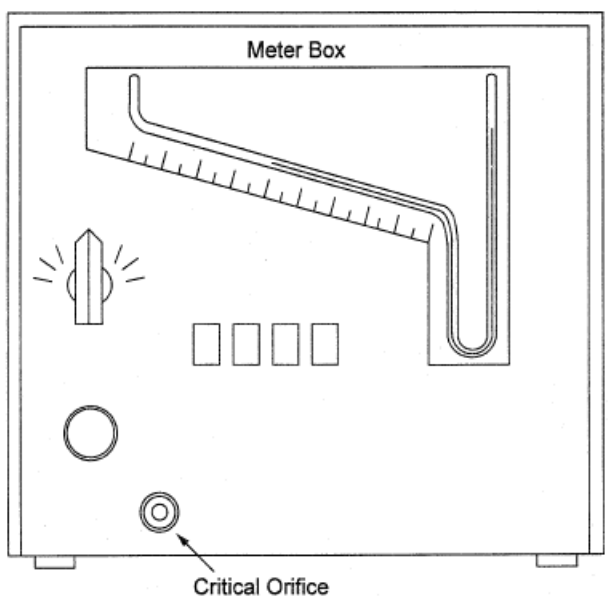

Figure 7-9. Critical orifice apparatus setup.

CALIBRATION OF TEMPERATURE MEASUREMENT DEVICES

The Method 5 source sampling system requires gas temperature measurements at several locations. The temperature measurements are important for correcting stack gas parameters to standard conditions. Accurate measurement within the tolerance given in the Code of Federal Regulations is essential. Procedures are given here for calibrating general types of temperature sensor devices. Manufacturer recommendations for special temperature sensors should be followed carefully.

Temperature Reference

A commercially available mercury thermometer capable of ± 1° sensitivity is sufficient for calibration purposes. The thermometer should be immersible in ice water, boiling water, hot mineral oil, or a tube furnace. The thermometer scale should cover the range of anticipated source temperatures.

Bimetallic Thermometer Calibration

Dial or bimetallic thermometers are used for temperature measurement in several train locations. Adjustable dial thermometers are calibrated by immersion in a water bath along with the mercury thermometer. Temperature readings should be taken at several points on the dial thermometer scale, and its reading should be set to correspond with the corrected mercury thermometer measurement (adjusted for elevation above sea level). Non-adjustable dial thermometers must agree with the corrected mercury thermometer temperature within 3°C (5.4°F), if used at the filter heater compartment, and within 1°C (2°F) when used at other locations in the sampling train.
It is unlikely that a dial or a bimetallic thermometer would be used to monitor in-stack gas temperature at most sources. If either is used for stack measurements, it must be calibrated to read stack temperature to within 1.5% of the minimum absolute stack gas temperature.

Thermocouples

An electromotive force is produced when two connected, dissimilar metal wires are subjected to temperature variations. The electromotive force (EMF) is fixed for a given combination of metals and is proportional to the temperature of the metal wires at the measurement junction. A cold or reference junction is maintained at the metering device. Potentiometers or millivoltmeters are commonly used to measure EMF. The voltage signals are, today, usually converted to read directly in degrees on either an analog or digital meter.

Thermocouple wires are necessarily thin to speed response time and increase EMF sensitivity. They must be thoroughly inspected on a routine basis. Any frayed or damaged wire should be replaced or repaired. Insulation must be complete, or wires could short against metal surfaces. The thermocouple junction should be either welded or silver-soldered.

The thermocouple should be calibrated with the millivoltmeter that will be used in the field. The voltmeter should first be zeroed and calibrated according to the manufacturer's instructions. The following procedure should then be followed:

1. Connect the meter to the thermocouple.
2. Check the thermocouple reading with that of a mercury thermometer at several readings:

a. Boiling water.

b. Ice point.

c. Ambient air.

If the temperature at the stack is greater than that of boiling water, several calibration points across the anticipated temperature range should be made. This may be done by using hot mineral oil, a tube furnace, or another apparatus that allows thermocouple and mercury thermometer comparison. The thermocouple should be thoroughly cleaned after it is calibrated in a material such as mineral oil. Do not immerse ceramic-covered thermocouples in a liquid calibration medium. They absorb the liquid, which can affect reading during calibration or in field use.

3. Record the data.
4. Make the proper adjustments (if possible) on the voltmeter to read the proper temperatures.

   If the meter cannot be adjusted to reflect the proper temperatures, construct a calibration curve and include it in your field notebook.

CALIBRATION OF THE TYPE S (STAUSSCHEIBE) PITOT TUBE

The Type S pitot tube has several advantages as a gas velocity pressure measurement instrument in particulate-laden gas streams. The Type S tube is compact. Separately or attached to a sampling probe, the tube fits easily into a 3-in. diameter sampling port. The Type S pitot tube maintains calibration in abusive environments, and its large sensing orifices minimize plugging by particulates. The Type S pitot tube also gives a high manometer reading for a given gas velocity pressure, which is helpful in stacks with low gas velocity. These features make the Type S pitot tube the most frequently used source sampling pitot tube.

The Type S pitot tube construction details should be carefully checked before calibration. The tube should be made of stainless steel or quartz (for high temperature gas streams) with a tubing diameter (D_t) between 0.48 and 0.95 cm (3/16 in. 3/8 in.). The distance from the base of each pitot tube leg to the plane of the orifice opening (P_A,P_B) should be equal (Figure 7-10).

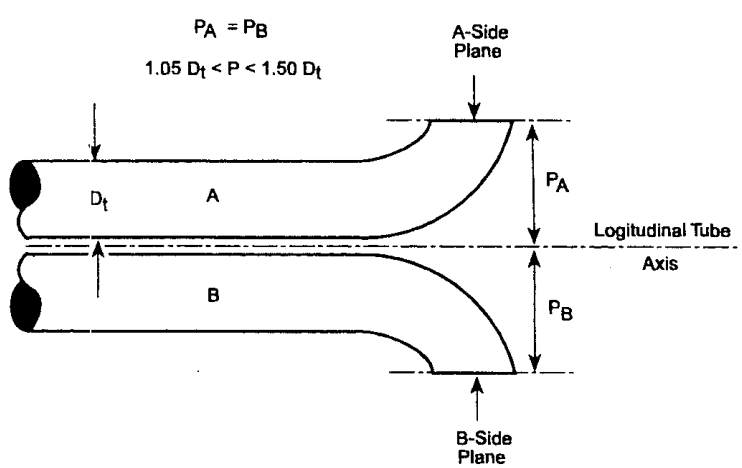

Figure 7-10. Type S pitot tube leg alignment.

P_A and P_B should be between 1.05 and 1.50 times the tubing diameter. Pitot tube orifice face openings should be properly aligned as shown in Figure 7-11. Misalignment of these openings can affect the pitot tube calibration coefficient and should be corrected before calibration.

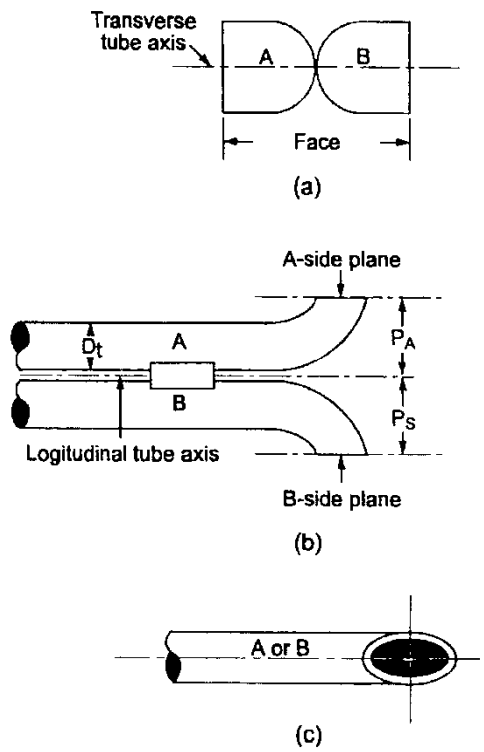

Figure 7-11. Type S pitot tube orifice alignment.

Calibration Equipment

1. Type S pitot tube assembled in the configuration anticipated for sampling. Both legs A and B permanently identified.
2. Inclined manometer with a sensitivity to 0.13 mm (0.005 in.) H_2O.
3. Standard pitot tube.
    a. Standard pitot-static tube with NIST (National Institute of Standards and Technology) traceable calibration coefficient.
    b. Standard pitot-static tube constructed as shown in Figure 7-12. A pitot tube design according to these criteria will have a baseline calibration coefficient of 0.99 ± 0.01.

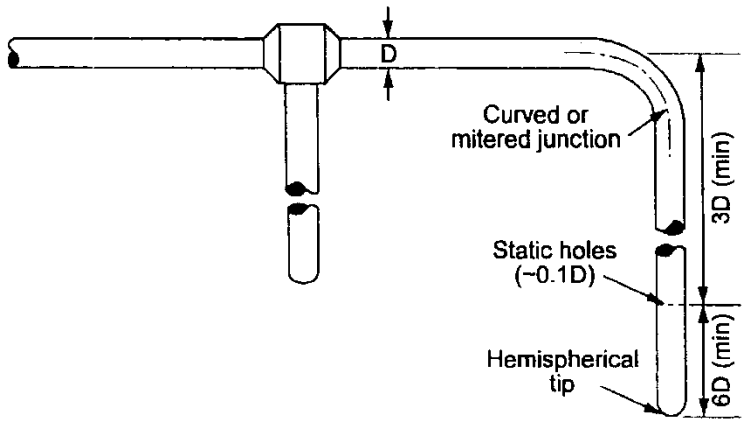

Figure 7-12. Standard pitot static tube.

4. Calibration duct.
    a. Minimum duct diameter cross-section of 30.5 cm (12 in.).
    b. Cross-section constant over a distance greater than 10 duct diameters.
    c. Entry ports arranged so that standard pitot and Type S pitot are reading gas .-pressure at the same point in the duct.
    d. Flow system capable of generating a gas velocity of approximately 915 m/ min (3000 ft/min). The gas flow must be constant with time for steady flow. There must be no cyclonic gas flow in the duct.
    e. If a multipoint calibration is performed, the duct gas velocity should be variable across the range of 180 to 1525 m/min (600 to 5000 ft/min).
5. Support system to ensure that pitot alignment is level and parallel to the duct axis.
5. Tubing and quick connection fittings.
6. Barometer.

Calibration Procedures

The duct gas flow system should be established at a steady flow rate and should be checked to ensure that there is no cyclonic gas flow. The pressure differential gauge should be thoroughly checked for proper zero, level, fluid density, and volume, and it should be set up on an area free of vibration. The pitot tube lines should be arranged so that they may be easily and quickly switched from one pitot tube to another. Always leave manometer connections set and switch lines at the pitot tube.

1. Leak-test the pitot tubes and tubing by sealing the pitot tube impact opening and then establishing a positive pressure at the opening greater than 7.6 cm (3 in.). The manometer pressure should remain stable for at least 15 seconds. Repeat the procedure for the static pressure side of the pitot tube, using negative pressure. Perform this check for all pitot tubes used in the calibration.

2. Using the standard pitot tube, measure the gas velocity pressure at the center of the calibration duct. Simultaneously, measure gas temperature. The sensing orifice must be parallel to the duct axis and perpendicular to the gas flow (Figure 7-13).

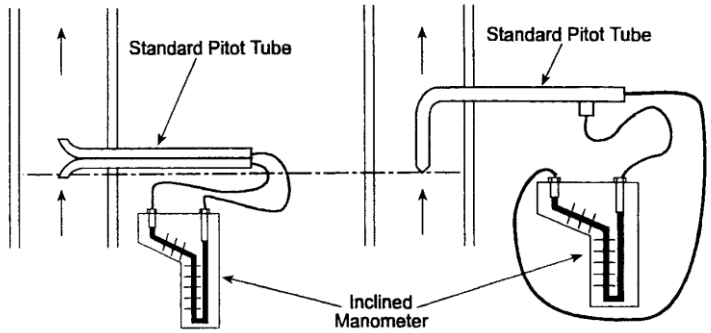

Figure 7-13. Pitot tube position in duct.

The standard pitot tube entry port should be sealed around the tube, with no sealing material protruding into the duct, and the Type S pitot tube port should be sealed.

3. Record all data, and then disconnect the standard pitot tube from the differential pressure gauge, remove the tube from the duct, and seal the port.

4. Assemble the Type S pitot tube and accessories to minimize aerodynamic interferences (Figure 7-14).

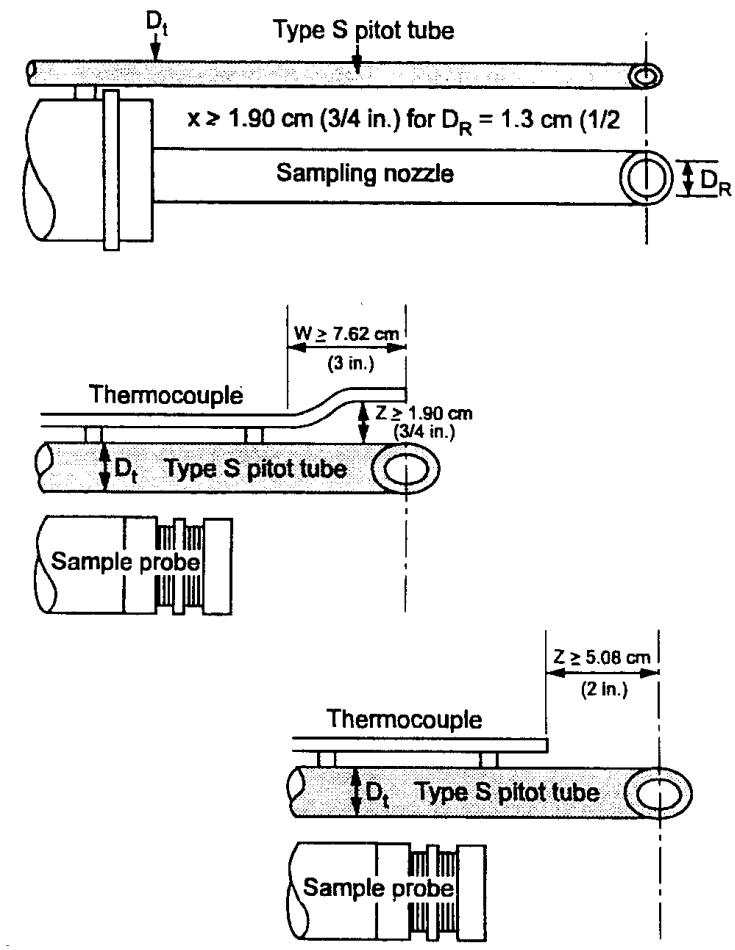

Figure 7-14. Configurations for minimum interference.

A very large sampling assembly can disturb the gas flow in small ducts. If the area of the assembled probe-pitot tube is greater than 2% of the duct cross-sectional area, the assembly should be calibrated in a larger test section, or the C, should be corrected for blockage (see 40 CFR Part 60.46, paragraphs a-f).

5. Connect the Type S pitot tube to the differential pressure gauge and insert the tube assembly into the duct. The Type S pitot tube must measure the gas velocity pressure at the same point in the duct as the standard pitot tube, and the pitot leg A must be properly aligned to the gas flow (Figure 7-12). Seal the area around the Type S pitot tube, then record all data.
6. Repeat the preceding steps until three readings have been made for leg A. Calibrate leg B in the same way. Calculate the pitot tube coefficient by the following equation:

(Eq. 7-5) $$C_{p(s)} = C_{p(std)}\sqrt{\frac{\Delta p_{std}}{\Delta p_s}}$$

Where: $C_{p(s)}$ = Type S pitot tube coefficient
$C_{p(std)}$ = standard pitot tube coefficient
Δp_{std} = velocity head measured by the standard pitot tube, cm H_2O (in. H_2O)
Δp_s = velocity head measured by the Type S pitot tube, cm H_2O (in. H_2O)

The deviation of each Cp(s) from the average (Cp) is calculated by Cp(s) – Cp(leg A or B). Average deviation from the mean for leg A or B is calculated by the following equation:

(Eq. 7-6) $$\sigma = \frac{\sum_{n=1}^{3}\left|C_{p(s)} - \overline{C}_{p(AorB)}\right|}{3}$$

Σ must be ≤ 0.01 for the test to be acceptable. $|C_{p(side\ A)} - C_{p(side\ B)}|$ must be ≤ 0.01 if the average of $C_{p(side\ A)}$ and $C_{p(side\ B)}$ is to be used.

BAROMETER CALIBRATION

The field barometer should be calibrated against a laboratory mercury barometer before each field use. If the field barometer cannot be adjusted to read within 5.1 mm (0.2 in.) Hg of the laboratory barometer, it should be repaired or replaced. The field barometer should be well-protected during travel.

CALIBRATION OF A STANDARDIZED DRY GAS METER

Reference volume meters are expensive for the average source sampling laboratory. An inexpensive dry gas test meter calibrated against a reference volume meter is accurate and convenient. This standardized test meter may then be used to calibrate sampling console dry gas meters.

Calibration Equipment

1. Spirometer
2. Dry gas test meter (0.1 ft^3 /meter revolution). This must be a test meter to ensure sufficient accuracy
3. Oil manometer (0-2 in. H_2O)
4. Leak-free pump (lubricated fiber vane pump with appropriate oil traps on diaphragm pump with gas pulse compensating baffle)
5. Needle valve
6. Three-way valve
7. Two dial thermometers capable of reading gas temperature ± 2°F

Calibration Procedures

Possible equipment configurations for dry gas meter calibration are shown as Figure 7-15.

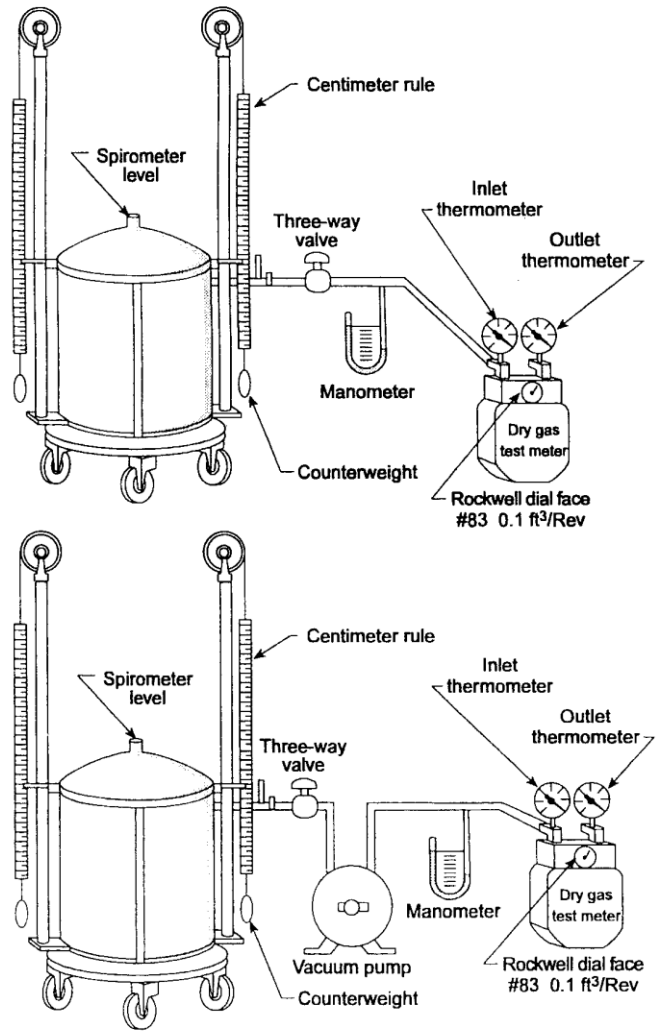

Figure 7-15. Dry gas meter calibration configuration.

The meter must be calibrated at several flow rates corresponding to pressure differentials (ΔH) of 0.1, 0.5, 1.0, and 1.5 in. H_2O. The 1.5 ΔH may be achieved by weighting the spirometer bell or using the pump; the other ΔH's can be established without the pump. The pump could increase the gas temperature from the spirometer to the dry gas meter. If it does, gas volume must be corrected for a temperature increase. Calibration of the meter without a pump in the system eliminates the need for temperature corrections.

1. The calibration system should be assembled and thoroughly tested for leaks at 2 in. H_2O. All leaks should be eliminated.
2. Level the spirometer and fill it with air. Allow the bell several minutes to stabilize.
3. Completely open the spirometer outlet valve and establish a 0.1 in. H_2O manometer

reading into the dry gas meter using the gas-flow needle valve. Close the spirometer outlet valve.

4. Read the spirorneter meter stick settings. Read the dry gas meter dial value.
5. Open the spirometer outlet valve, check the manometer reading and allow 0.5 ft^3 of air to flow to the dry gas meter (five revolutions of 0.1 ft^3/revolution dry gas meter dial).
6. Stop the airflow. Record the dry gas meter and spirometer settings on the calibration form. Repeat the procedure for the other AH values. Calculate and average the dry gas meter correction factors. If the factor is outside the tolerance 1 ± 0.02, adjust the dry gas meter internal sliding vanes and recalibrate.

If a pump is used in the calibration apparatus, it could heat the gas entering the dry gas meter. This possibility requires that the dry gas meter volume be corrected to conditions in the spirometer by the equation:

(Eq. 7-7) $$V_{m(corr)} = V_m \left[\frac{T_{amb}\left(P_b + \frac{\Delta H}{13.6}\right)}{P_b T_{m(avg)}} \right]$$

When a pump is used, a three-way valve is employed to establish the flow rate through the dry gas meter, using atmospheric air. The valve is switched to the spirometer, and the dry gas meter is read.

CALIBRATION OF THE SOURCE SAMPLING NOMOGRAPHY

A number of nomographs are available commercially. These instruments are used to solve graphically the sampling nozzle sizing equation.

(Eq. 7-8) $$D_n = \sqrt{\frac{0.0358 Q_m P_m}{T_m C_p (1 - B_{ws})}} \sqrt{\frac{T_s M_s}{P_s \overline{\Delta p}}}$$

Where: D_n = nozzle diameter (in.)

Q_m = volumetric flow rate through meter (ft^3/min)
P_m = absolute pressure at meter (in. Hg)
P_s = absolute pressure at stack (in. Hg)
T_m = absolute temperature at meter (°R)
T_s = absolute temperature at stack (°R)
C_p = pitot tube calibration coefficient
B_{ws} =water vapor in stack gas, volume fraction
M_s = molecular weight of stack gas, wet basis (lb/lb-mole)
$\overline{\Delta p}$ = average velocity head of stack gas (in. H_2O)

And the isokinetic rate equation:

(Eq. 7-5) $$\Delta H = \left[846.72 D_n^4 \Delta H_@ C_p^2 (1 - B_{ws})^2 \frac{M_d T_m P_s}{M_s T_s P_m} \right] \Delta p$$

Today, programmable calculators are often used to solve these equations. Also, a number of plastic slide rules are currently available. These are somewhat more accurate and more convenient to use than the traditional source sampling nomograph.

If a nomograph is used, it should be thoroughly checked for scale accuracy and alignment. Nomograph calibration forms (Figure 7-16) help in making these checks. The traditional source sampling nomograph assumes that the Type S pitot tube has a C_p of 0.84. For C_p values different from 0.84, the C factor obtained on the nomograph must be adjusted by the method given in Form A (Figure 7-16).

The traditional source sampling nomograph also assumes that the molecular weight of the stack gas is 29.1 lb/lb-mole. For molecular weights appreciably different from this value, the C factor of the nomograph should be further adjusted by the method given in Form B (Figure 7-16).

Traditional source sampling nomographs are usually made by fixing a decal on a plastic board. Unfortunately, the scales printed on the decal frequently become misaligned when the decal is applied to the board. Form C (Figure 7-16) gives a procedure that one can use to check the nomograph alignment. The calibration form gives the values used to check the alignments. The check is accomplished by positioning the marker line through the ΔH and Δp points given, and then tightening the pivot point. The All reading for each Δp value given is then read. If any ΔH readings are off-scale or differ by more than 3% of the proper values, the scale is misaligned. Nomographs that indicate such misalignment should be returned to the manufacturer and replaced.

Form D (Figure 7-16) gives a procedure for checking the accuracy of the nomograph. Here the true values obtained by using the preceding equations are compared to the values obtained by the nomograph manipulations. Calculated and nomograph values should not differ by more than 5%. Nomographs showing greater error should be returned to the manufacturer and replaced.

Source Sampling Nomograph Calibration Data

Form A. Correct the C factor obtained in normal operation of the nomograph for C_p observer ≠ 0.84 by:

$$\text{C factor (adjusted)} = (\text{C factor nomograph}) \frac{(\text{Pitot tube } C_p)^2}{(0.84)^2}$$

Nomograph ID No.	Nomograph C Factor	Pitot C_p	$\frac{(C_p)^2}{(0.84)^2}$	Adjusted C Factor

Form B. Correct the nomograph C factor for $M_d \neq 29$ lb/lb-mole

$$\text{C factor (adjusted)} = (\text{C factor nomograph})\ \frac{1 - B_{ws} + 18\frac{B_{ws}}{29}}{1 - B_{ws} + 18\frac{B_{ws}}{M_d}}$$

Nomograph ID No.	Nomograph C Factor	Stack Gas Dry Molecular Weight (Md)	Adjusted C Factor

Form C. Scale alignment (check all nomographs)

	Step 1	Step 2	Step 3		
	Set marker on and tighten pivot	Set one end of marker on	ΔH should read	Nomograph ID No. actual ΔH reading	Nomograph ID No. actual ΔH reading
Alignment Test 1	ΔH = 0.1 Δp = 0.001	Δp = 0.01	1.0		
		Δp = 0.1	10.0		
Alignment Test 2	ΔH = 10.0 Δp = 10.0	Δp = 1.0	1.0		
		Δp = 0.1	0.1		
Alignment Test 3	= 1.0 Δp = 0.1	Δp = 1.0	10.0		
		Δp = 0.01	0.1		

Form D. Nomograph accuracy*

Meter Console ΔH@	Meter Tm°F	Stack Gas Bws × 100	Ps	Pm	Stack Ts°F	$\overline{\Delta p}$	Nomo-graph C Factor	Cal. Nozzle Dn	Nomo-graph ΔH	Cal. ΔH
1.84	70	5	29.92	29.92	1000	1.00				
1.00	140	10	29.92	29.92	300	2.00				
2.00	100	30	35.9	29.92	500	2.00				

*Assume $Q_m = 0.75$; $C_p = 0.84$; $B_{wm} = 0$; $M_d = 29.0$

Figure 7-16. Form for source sampling nomograph calibration.

Calibration of the Probe Nozzle Diameter

The probe nozzle should be made of 316 stainless steel or quartz with a sharp, tapered leading edge. A taper angle of 30° on the outside of the sampling nozzle will preserve a constant internal diameter. The nozzle should be a buttonhook or elbow design so that the nozzle opening is below the pitot tube sensing orifice. This is necessary for isokinetic sampling. Alternate construction materials or nozzle shapes must be approved by the administrator.

The sampling nozzle must be calibrated before use in a source experiment. Calibration should be done in the laboratory and checked just prior to use in the field. Inside/outside calipers are used to measure the interior nozzle diameter to the nearest 0.025 mm (0.001 in.).
The calipers are inserted as close to the edge of the nozzle opening as possible; readings are then taken on three separate diameters and recorded. Each reading must agree within 0.1 mm (0.004 in.), or the nozzle must be reshaped. Any nozzle that has been nicked, dented, or corroded must be reshaped and recalibrated. All calibrated nozzles should be permanently identified.

7.5 SUMMARY

TOPICS IN SOURCE TEST QUALITY ASSURANCE

This chapter covered the following topics:

- Common terminology associated with evaluating data and classifying common errors.
- The Role of Agency Observers.
- Guidelines for Calibration.

BIBLIOGRAPHY

Aldina, G.J., and J.A. Jahnke. 1979. *Source Sampling for Particulate Pollutants*. (APTI Course 450 Student Manual). EPA 450/2-79-006. U.S. Environmental Protection Agency.

Beers, Y. 1968. *Theory of Errors*. Reading, MA: Addison-Wesley.

DeWees, W.G. 1982. *Supplemental Training Material for Technical Workshop on Evaluating Performance Tests*. U.S. Environmental Protection Agency, Division of Stationary Source Enforcement, and PEDco Environmental Specialists.

Mitchell, W.J., and Midgett, M.R. 1976. Field reliability of the Orsat Analyzer *Journal of the Air Pollution Control Association* 26(5):491.

Smith, F., D. Wagoner, A.C. Nelson. 1974. *Determination of Stack Gas Velocity and Volumetric Flow Rate (Type S Pitot Tube)*. Vol. 1, *Guidelines for Development of a Quality Assurance Program*. EPA 650/4-74-005d. U.S. Environmental Protection Agency.

Smith, F., D. Wagoner, A.C. Nelson. 1974. *Determination of Particulate Emissions from Stationary Sources*. Vol. IV, *Guidelines for Development of a Quality Assurance Program*. EPA 650/4-74-005d. U.S. Environmental Protection Agency.

U.S. Environmental Protection Agency. 1973. *Collaborative Study of Method for Stack Gas Analysis and Determination of Moisture Fraction with Use of Method 5*. EPA 650/4-73-026.

U.S. Environmental Protection Agency. 1974. *Determination of Particulate Emissions from Stationary Sources*. Vol. IV, *Guidelines for Development of a Quality Assurance Program*. EPA 650/4-74-005d.

U.S. Environmental Protection Agency. 1974. *Collaborative Study of Method for the Determination of Particulate Matter Emissions from Stationary Sources*. EPA 650/4-74-029.

U.S. Environmental Protection Agency. 1974. *Collaborative Study of Method for Determination of Stack Gas: Velocity and Volumetric Flow Rate in Conjunction with EPA Methods*. EPA 650/4-74-033.

U.S. Environmental Protection Agency. 1975. *Method for Obtaining Replicate Particulate Samples from Stationary Sources*. EPA 650/4-75-025.

U.S. Environmental Protection Agency. 1976. *Collaborative Study of Particulate Emissions Measurements by EPA Methods 2, 3, and 5 Using Paired Particulate Sampling Trains (Municipal Incinerators)*. EPA 600/4-76-014.

U.S. Environmental Protection Agency. *Stationary Source Specific Methods*. Vol. III, *Quality Assurance Handbook for Air Pollution Measurement Systems*. EPA 600/4-77-027.

Vollaro, R.F. 1976, October. *The Effects of Impact Opening Misalignment on the Value of the Type S Pitot Tube Coefficient*. U.S. Environmental Protection Agency, Emission Measurement Branch.

Vollaro, R.F. 1976, April. *Establishment of a Baseline Coefficient Value for Properly Constructed Type S Pitot Tubes*. U.S. Environmental Protection Agency, Emission Measurement Branch.

Adapted from W.G. DeWees. 1982. *Supplemental Training Material for Technical Workshop on Evaluating Performance Tests.* DSSE, EPA. PEDco – Environmental Specialists.

CHAPTER 8

8.0 SAMPLING TRAIN CONFIGURATIONS AND PM_{10} SAMPLING

8.1 OVERVIEW

PURPOSE

This chapter explores basic methods for sampling particulate matter from NSPS sources. Drawing from the information presented in the earlier chapters, this chapter includes Methods 8 and 17, given in 40 CFR Part 60 Appendix A and the PM_{10} sampling methods given in 40 CFR Part 51 Appendix M. Equivalent purposes may be used for special purposes, or when emissions from a given facility are not capable of being measured by Method 5. However their use is generally subject to the approval of the agency administrator.

DDS sampling configurations for various substances, including; Method 17 *(the in-stack filter)*, Method 8 *(Sulfuric Aerosol)*, and Method 13 *(for fluorides)*, Combined Method 5/Method 17 System, and PM_{10} Methods of 40 CFR Part 51, which include: Method 201 *(PM_{10} Exhaust Gas Recycle Method)*, and Method 201A *(Constant Sampling Rate)*.

LEARNING OBJECTIVES

At the conclusion of this training, students will be able to:

- Recognize basic sampling train configurations for sampling particulate matter.
- Identify the conditions for using Method 17 sampling.
- Recognize the conditions that would indicate a need for Method 8 sampling.
- Recognize the sampling methods identified in 40 CFR Part 60 Appendix A and 40 CFR Part 51 Appendix M.

OVERVIEW

Method 5 was introduced in Chapter three of this course. It is the principal method used for sampling particulate matter from NSPS sources. However, other particulate sampling methods can also be used and may be applied for specific source categories. These methods include Methods 8 and 17, given in 40 CFR Part 60 Appendix A and the PM_{10} sampling methods given in 40 CFR Part 51 Appendix M. Equivalent methods may be used for special purposes, or when emissions from a given facility are not capable of being measured by Method 5. However, their use is generally subject to the approval of the agency administrator.

The principles of Method 5, mainly isokinetic sampling, are also incorporated into other method required under 40 CFR Parts 61 and 63 to quantity organic and inorganic hazardous air pollutants (HAPs). In these methods, collected particulate matter is analyzed for HAPs such as HCl, dioxins, and trace metals.

8.2 BASIC SAMPLING TRAIN CONFIGURATIONS OF 40 CFR PART 60

INTRODUCTION

A number of sampling train configurations are used in the reference methods detailed in 40 CFR Part 60. Since we have already studied Method 5, it is quite easy to note the differences between Method 5 and the other methods. In fact, the Method 5 sampling technique has proven to be the "basic" particulate sampling method, with most other sampling methods being merely variations -on the same theme. The placement of a filter, the addition of Tenax adsorbent, and changes in impinger reactants or absorbents are all features that have given rise to a large "bag of tricks" that the source tester can use to sample particulate matter, metals, acid gases, and volatile organic compounds. Federal Reference Methods which use the basic principles of Method 5, mainly isokinetic sampling, are listed in Table 8-1.

	Table 8-3. Federal Reference Methods that require isokinetic sampling.
Method Number	**Title**
5	Determination of Particulate Matter Emissions From Stationary Sources
5A	Determination of Particulate Matter emissions from the Asphalt Processing and Asphalt Roofing Industry
5B	Determination of Nonsulfuric Acid Particulate Matter Emissions from Stationary Sources
5D	Determination of Particulate Matter Emissions from Positive Pressure Fabric Filters
5E	Determination of Particulate Matter Emissions From the Wool Fiberglass Insulation Manufacturing Industry
5F	Determination of Nonsulfate Particulate Matter Emissions From Stationary Sources
5G	Determination of Particulate Matter Emissions From Wood Heaters (Dilution Tunnel Sampling Location)
5H	Determination of Particulate Matter Emissions From Wood Heaters From a Stack Location
5I	Determination of Low Level Particulate Matter Emissions From Stationary Sources
8	Determination of sulfuric acid mist and sulfur dioxide emissions from stationary sources
12	Determination of inorganic lead emissions from stationary sources
13A	Determination of total fluoride emissions from stationary sources—SPADNS zirconium lake method
13B	Determination of total fluoride emissions from stationary sources—Specific ion electrode method
14	Determination of fluoride emissions from potroom roof monitors for

	primary aluminum plants
17	Determination of particulate emissions from stationary sources (in-stack filtration method)
23	Determination of Polychlorinated Dibenzo-p-Dioxins and Polychlorinated Dibenzofurans From Stationary Sources
26A	Determination of Hydrogen Halide and Halogen Emissions From Stationary Sources Isokinetic Method
29	Determination of metals emissions from stationary sources
101	Determination of Particulate and Gaseous Mercury Emissions From Chlor-Alkali Plants (Air Streams)
101A	Determination of Particulate and Gaseous Mercury Emissions From Sewage Sludge Incinerators
102	Determination of Particulate and Gaseous Mercury Emissions From Chlor-Alkali Plants (Hydrogen Streams)
103	Beryllium Screening Method
104	Determination of Beryllium Emissions From Stationary Sources
108	Determination of Particulate and Gaseous Arsenic Emissions
201	Determination of PM_{10}Emissions
201A	Determination of PM_{10} and $PM_{2.5}$ Emissions from Stationary Sources
202	Dry Impinger Method for Determining Condensable Particulate Emissions From Stationary Sources
306	Determination of chromium emissions from decorative and hard chromium electroplating and chromium anodizing operations - Isokinetic Method

One must be careful when using other train configurations, since the configuration and sampling conditions can affect what is collected. For example, different materials, such as volatile organic compounds, may be present in the stack as vapor, but may condense at the lower temperatures of the sampling train. These so-called "condensibles" may be caught in the impingers, the back half of the Method 5 train. If this impinger catch is added to the filter catch, the total mass of particulate matter collected will of course be higher.

Adding or ignoring the impinger catch has been a significant issue in many regulatory programs. When specifying a sampling method, it is important that the issue be addressed.

To see the effect of sampling train configuration on the particulate catch, consider the following methods.

METHOD 5

Method 5 is presented schematically in Figure 8-1.

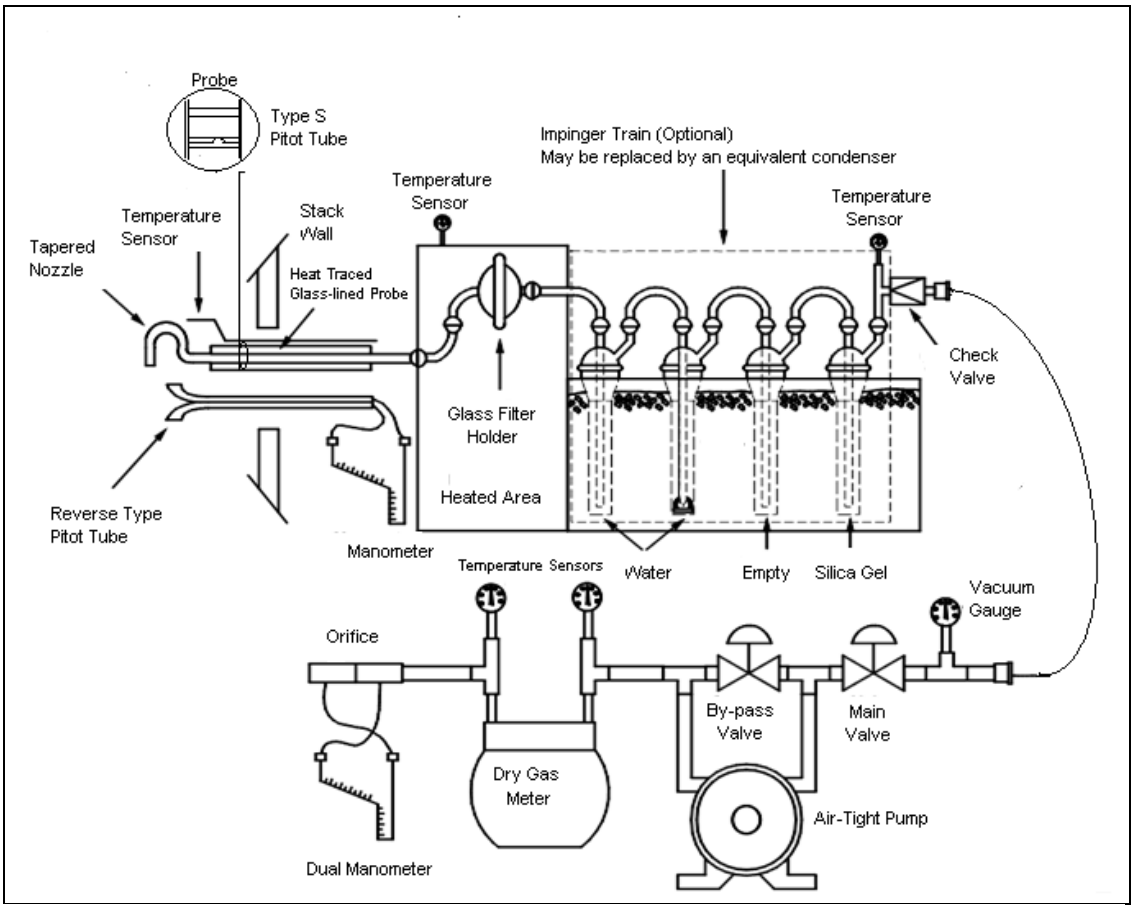

Figure 8-1. Method 5 sampling train configuration.

The analytical procedures for the method require the following:

1. Filter glass mat and particulate matter be desiccated to constant weight ± 0.5 mg.
2. Probe, nozzle, and filter holder be washed with acetone.
    a. Acetone blank (100 mL) evaporated at room temperature and pressure.
    b. Acetone and particulate matter evaporated at room temperature and pressure in a tared weighing bottle.
    c. Particulate matter desiccated and weighed to constant weight ± 0.5 mg.
3. Silica gel weighed to nearest gram.
4. Volume of water in condenser measured and recorded. Water discarded.

The sampling train configuration and the analytical procedure outlined constitute a technical definition of "particulate matter." In effect, particulate matter is solid or liquid matter caught on the filter at the specified temperature of the filter box. This temperature is typically 248°F.

Method 5 has several variations as shown in Table 8-1 including Method 5A through I. The variations account for differences in source type and specify different filter temperatures as

shown in Table 3-1. Automated Method 5 sample trains are also now becoming available. These systems:

- Maintain isokinetic sampling conditions without operator assistance,
- Calculate stack traverse points,
- Calculate correct nozzle diameter for site conditions,
- Store and display user entered data and parameters,
- Upload and download data files,
- Perform instantaneous isokinetic sample flow calculations,
- Alerts operator to move the probe, and
- Provide alarms to indicate when acceptable conditions are not met.

METHOD 17 – THE IN-STACK FILTER

A schematic diagram of the Method 17 in-stack train is illustrated in Figure 8-2.

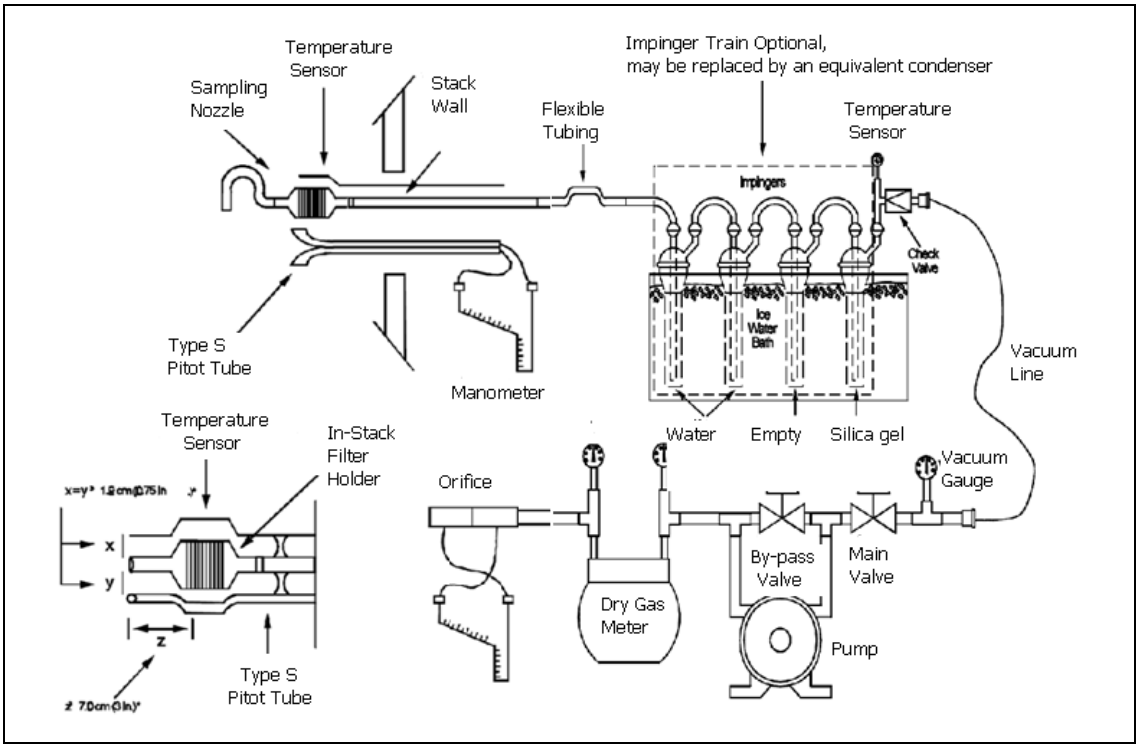

Figure 8-2. Schematic of an in-stack filter system.

During Method 17, the filter is maintained at stack temperature and pressure. This method is applicable for the determination of PM emissions, where PM concentrations are known to be independent of temperature over the normal range of temperatures characteristic of emissions from a specified source category. Typical analytical procedures consider the particulate matter collected on the filter only. This system, therefore, defines only solid or liquid particulate matter collected at stack conditions. Particles penetrating the filter and settling in the probe or impingers are generally ignored.

Gaseous pollutants that condense at temperatures lower than the stack temperature are trapped in the condenser. If the analysis excludes the condenser catch, these materials are not part of the "particulate matter" and the resultant particulate concentration calculated could be lower than that determined by Method 5 (e.g., if the material condensed at 248°F, the Method 5 filter box temperature). The use of this type of system must therefore be carefully evaluated in the context of the test objectives and source operating conditions.

METHOD 8 (FOR SULFURIC ACID AEROSOL)

The configuration for this modification of Method 5 is illustrated in Figure 8-3.

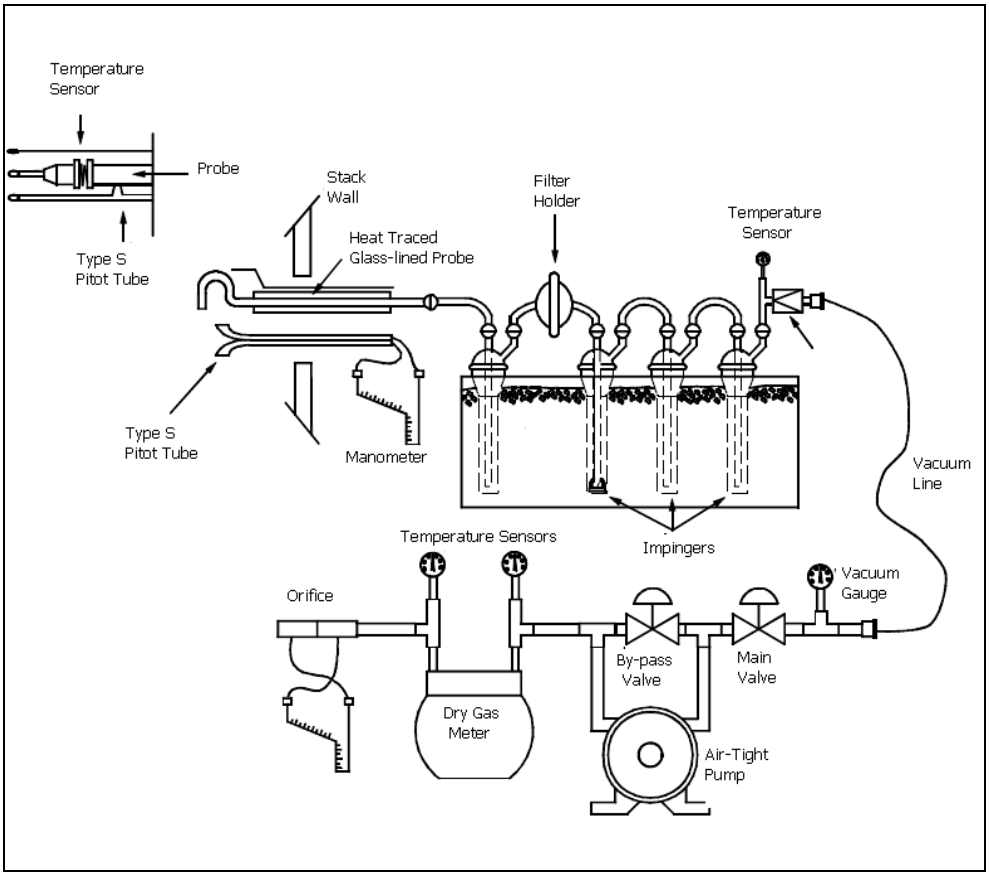

Figure 8-3. Schematic diagram of Method 8.

This system uses an out-of-stack filter that collects at ambient temperature and pressure. The filter is located between the first and second condenser and there is no requirement to heat the filter. The system traps liquid aerosols and solids on the filters and in the condenser. The particulate matter caught on the filter is trapped at a temperature much lower than the 248°F recommended for Method 5. Also, the particulate matter found in the first and second condensers might be artifacts of the collection process and not actually be present under stack conditions. Again, application of this method must be evaluated in the context of test objectives and source operations.

Method 8 physically separates the sulfuric acid/sulfur trioxide from the sulfur dioxide in the

sample train. At the conclusion of the sample collection, the sulfuric acid/sulfur trioxide sample is contained in the isopropyl alcohol solution recovered from the first impinger and the backup filter. The sulfur dioxide sample is contained in the hydrogen peroxide solution recovered from impingers two and three. Once the sulfur oxides are collected, they are in the chemically identical form of a sulfuric acid solution. The analysis for both sample fractions is removed and placed in a flask. Isopropyl alcohol is added to the sample to adjust the concentration of the alcohol to at least 80%. A few drops of a solution of Thorin is added to the sample, and the sample is titrated with a 0.01 N solution of barium perchlorate until the color of the sample changes from straw yellow to salmon pink.

METHOD 13A AND B (FOR FLUORIDES)

The modification depicted in Figure 8-4 for Method 13A shows filters located both behind and in front of the condenser.

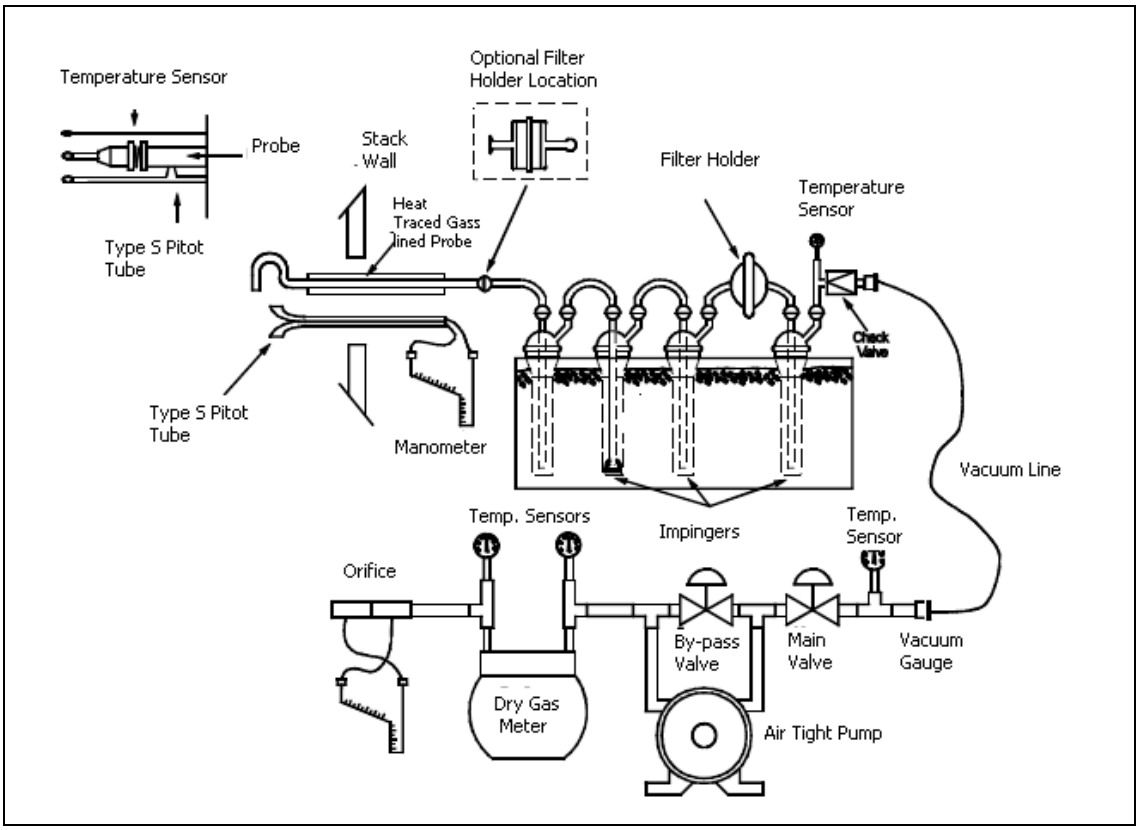

Figure 8-4. Schematic diagram of Method 13A (SPADNS Zirconium Lake Method).

The front filter is optional and should be maintained at a temperature of 275°F when collecting fluorides. The second filter temperature is at ambient temperature but may be heated and maintained at a maximum of 248°F. This system can trap particulate matter both on the filters and in the condenser. The selective analysis of various parts of the train is therefore very important. The system can be subject to the biases noted in the other systems; however, it can give a full assessment of the gaseous and particulate fluoride emitted.

Method 13B is also available and is similar to 13A except that total fluoride is determined by

the specific ion electrode method.

COMBINED METHOD 5/METHOD 17 SYSTEM

Figure 8-5 illustrates a combined system that utilizes both in-stack and external filters.

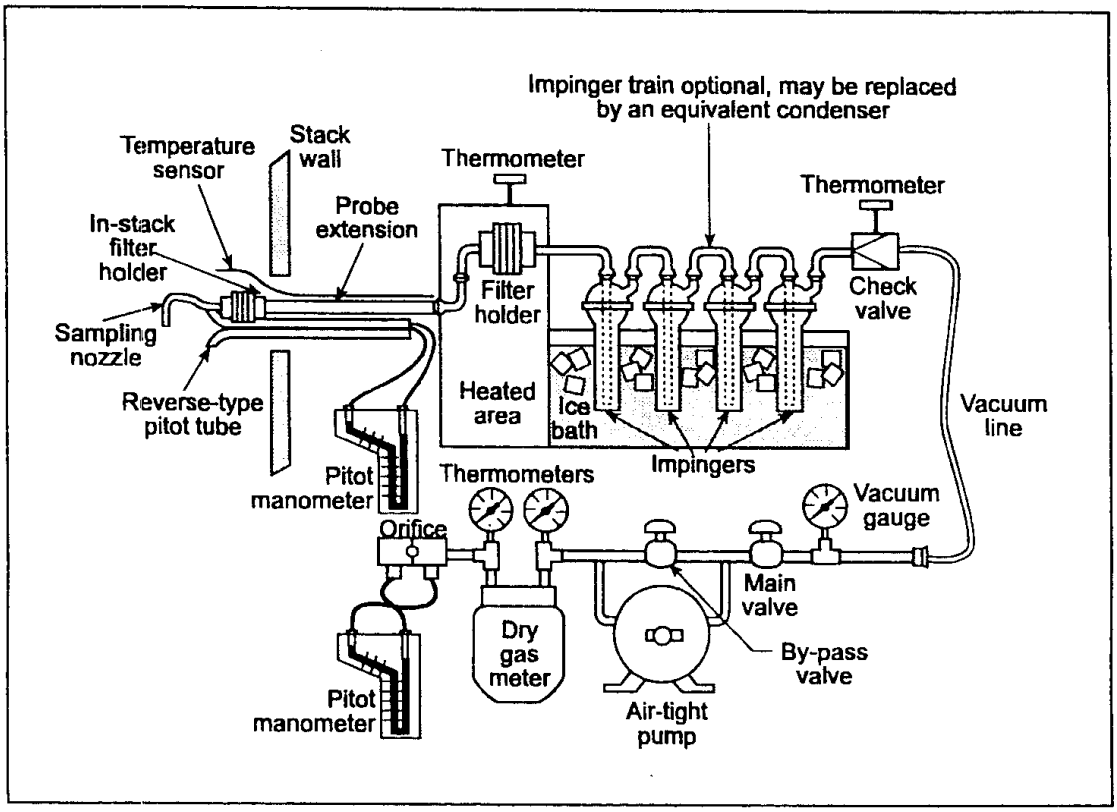

Figure 8-5. A combined system.

The in-stack filter in this system collects particulate matter under flue gas conditions, whereas the external filter can be maintained at a temperature suitable for other particulate matter definitions. Depending on the temperatures at which the external filter is maintained, this modification of Method 5 could assess in-stack particulate matter, Method 5 particulate matter, or ambient particulate matter. This system could be a useful research tool.

PM_{10}, PM2.5, AND CONDENSABLE PM METHODS OF 40 CFR PART 51 APPENDIX M

On December 21, 2010, in Federal Register notice 75 FR 80118, the EPA promulgated significant revisions to Method 201A and 202. Method 201A was originally released on April 17, 1990 (56 FR 65433) to provide a test method for measuring filterable PM_{10} emissions from Stationary Sources. The amendments to Method 201A on December 21, 2010, added a particle-sizing device to allow for sampling of particulate matter with mean aerodynamic diameters less than or equal to 2.5 micrometers ($PM_{2.5}$ or fine particulate matter).

Method 202 was originally promulgated on December 17, 1991 (56 FR 65433) to provide a test method for measuring condensable particulate matter (CPM). The amendments to Method 202 on December 21, 2010, revised the sample collection and recovery procedures of the method to reduce the formation of reaction artifacts that could lead to inaccurate measurements

of condensable particulate matter. Additionally, the amendments to Method 202 eliminated most of the hardware and analytical options in the existing method, thereby increasing the precision of the method and improving the consistency in the measurements obtained between source tests performed under different regulatory authorities.

Method 201 is also available for the in-stack measurement of particulate matter (PM) emissions equal to or less than an aerodynamic diameter of nominally 10 µm (PM_{10}) from stationary sources. Finally, the EPA has developed Conditional Test Method 039 to quantify $PM_{2.5}$ and CPM using dilution sampling. Methods 201, 201A, 202, and 039 are described in the following sections.

Method 201 (PM_{10} Exhaust Gas Recycle Method)

In the Exhaust Gas Recycle (EGR) method, the flue gas is isokinetically extracted from the source into an in-stack cyclone as shown in Figure 8-6. The cyclone separates particulate matter greater than PM_{10} and an in-stack glass fiber filter is used to collect the PM_{10}.

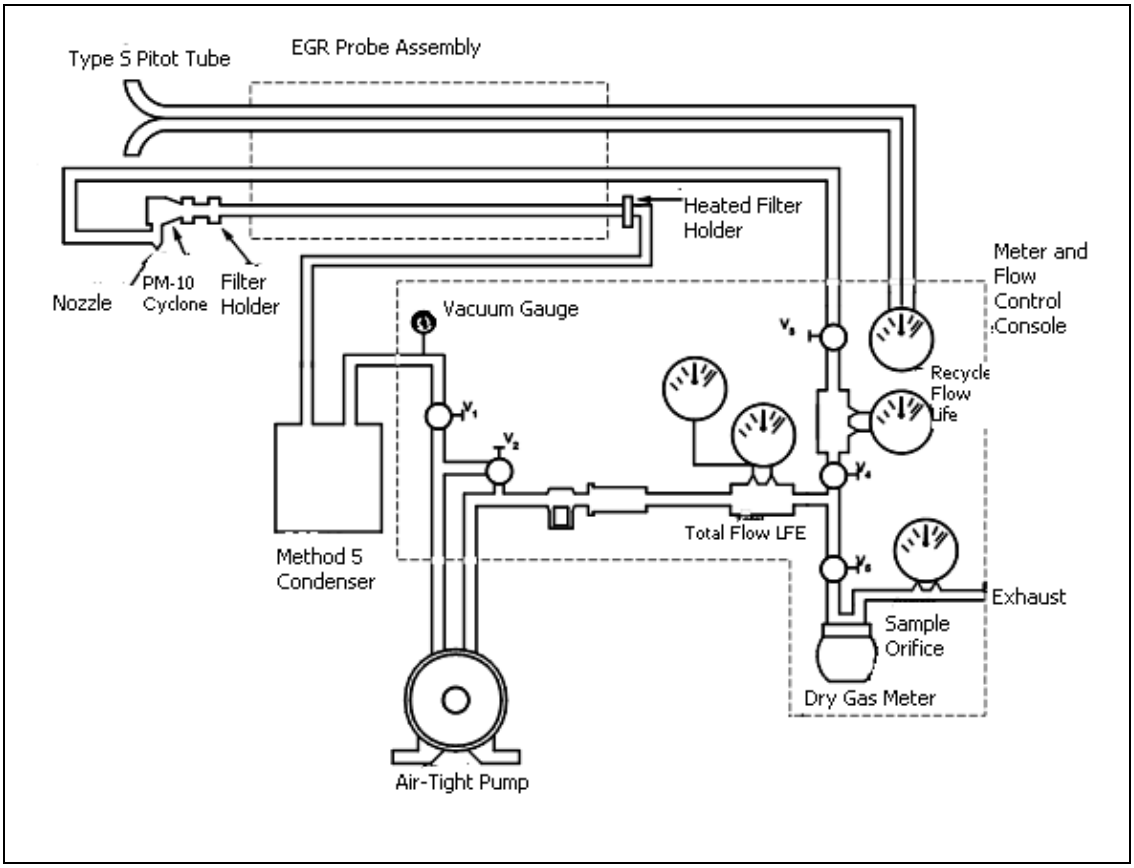

Figure 8-6. The exhaust gas recycle (EGR) method for PM_{10}.

The ERG technique utilizes clean, dry gas from the sampling train exit to maintain a constant flow rate through the cyclone since the cut size holds only for a given, constant flow rate. This exhaust gas is recycled into the nozzle. The amount of gas recycled must be calculated and the

recycle flow rates must be carefully set.

CPM emissions not collected by the in-stack filter in Figure8-6 are also PM_{10}. As noted in Chapter 1, emissions that contribute to ambient PM_{10} levels are the sum of condensible emissions and emissions measured by an in-stack PM_{10} method, such as this method or Method 201A (described in the next section). Therefore, for establishing source contributions to ambient levels of PM_{10}, such as for emission inventory purposes, the EPA suggests that source PM_{10} measurement include both in-stack PM_{10} and condensible emissions. Condensible emissions may be measured by an impinger analysis in combination with method 201.

Method 201A (Constant Sampling Rate Procedure)

The CSR method is somewhat easier to perform than the EGR method, but does require a relatively constant flue gas flow rate. Variations from isokinetic sampling conditions must be maintained within well-defined limits. The sampling train is shown in Figure 8-7.

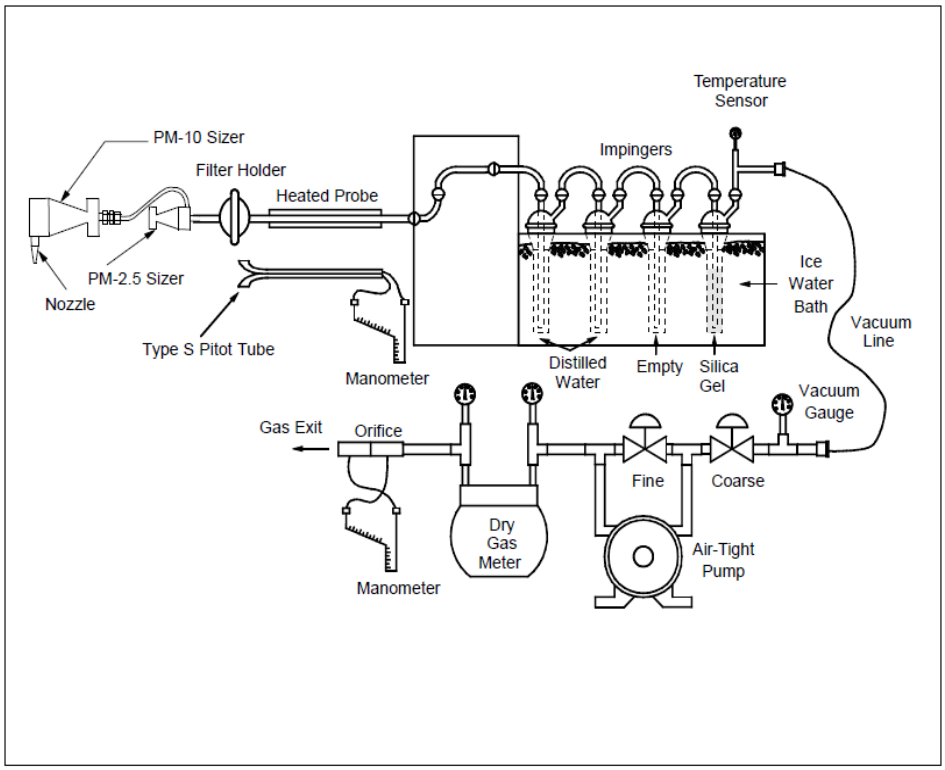

Figure 8-7. In-stack PM_{10} and $PM_{2.5}$ sampling train.

To measure PM_{10} and $PM_{2.5}$, a sample of gas is extracted at a predetermined constant flow rate through an in-stack sizing device. The particle-sizing device separates particles with nominal aerodynamic diameters of 10 micrometers and 2.5 micrometers.

To minimize variations in the isokinetic sampling conditions, well-defined limits are established. After a sample is obtained, uncombined water is removed from the particulate and a gravimetric analysis is used to determine the particulate mass for each size fraction.

The original method, as promulgated in 1990, was changed by adding a $PM_{2.5}$ cyclone

downstream of the PM_{10} cyclone. Both cyclones were developed and evaluated as part of a conventional five-stage cascade cyclone train. The addition of a $PM_{2.5}$ cyclone between the PM_{10} cyclone and the stack temperature filter in the sampling train supplements the measurement of PM_{10} with the measurement of $PM_{2.5}$. Without the addition of the $PM_{2.5}$ cyclone, the filterable particulate portion of the sampling train may be used to measure total and PM_{10} emissions. Likewise, with the exclusion of the PM_{10} cyclone, the filterable particulate portion of the sampling train may be used to measure total and $PM_{2.5}$ emissions.

Method 202 Condensible Particulate Matter

As shown in Figure 8-7, Method 202 collects CPM in dry impingers after filterable PM has been collected on a filter maintained as specified in either Method 5, Method 17, or Method 201A as described previously in this chapter. The organic and aqueous fractions of the impingers and an out-of-stack CPM filter are then taken to dryness and weighed. The total of the impinger fractions and the CPM filter represents the CPM.

Compared to the version of Method 202 that was promulgated on December 17, 1991, this method eliminates the use of water as the collection media in the impingers and includes the addition of a condenser followed by a water dropout impinger immediately after the final in-stack or heated filter. This method also includes the addition of one modified Greenburg Smith impinger (backup impinger) and a CPM filter following the water dropout impinger.

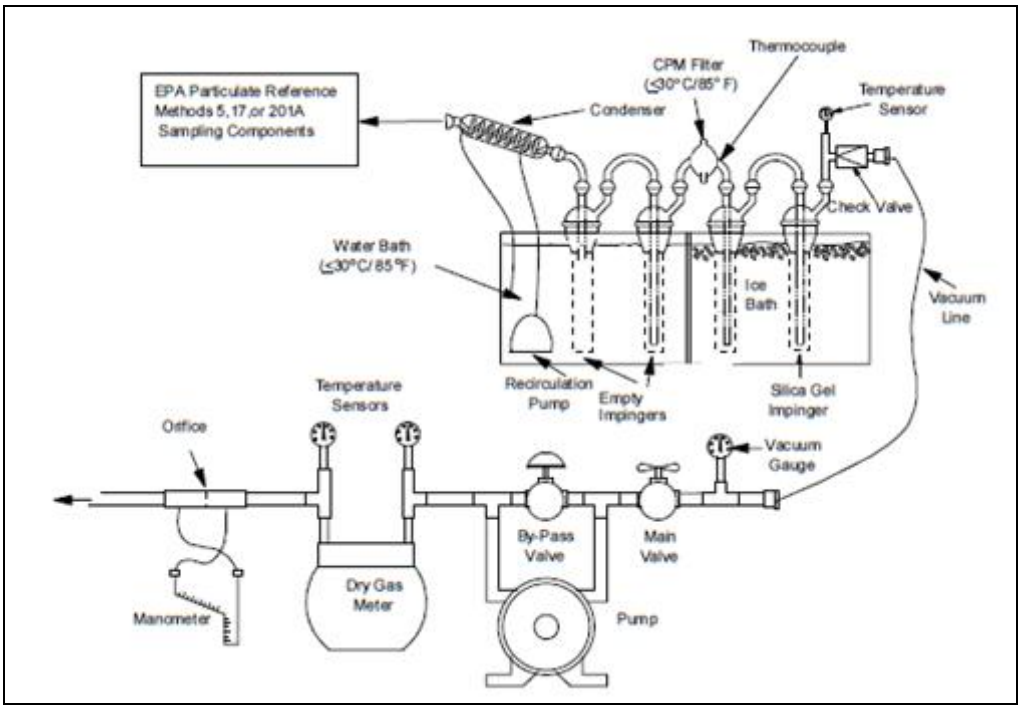

Figure 8-8. Schematic of Condensable Particulate Sampling Train.

DILUTION SAMPLING SYSTEM

The EPA has developed a dilution sampling method under CTM 039 to expand on the

measurement Capabilities of Method 201A and CTM-040 by:

- Incorporating a $PM_{2.5}$ sizer (cyclone IV) behind (or replacing) the PM_{10} sizer (cyclone I) as in CTM-040,
- Removing the in-stack filter,
- Diluting the sample gas utilizing a mixing cone and residence chamber,
- Using a dilution air system to supply clean air at a temperature less than 85°F (low enough to achieve a filtration temperature of less than 85°F) and a relative humidity less than 50%,
- Adding a 142-mm filter to the residence chamber exit to capture any particulate that passes through the residence chamber, and
- Providing a sample stream and extraction location for speciating $PM_{2.5}$ in a manner similar to that utilized for ambient $PM_{2.5}$ speciation.

As shown in Figure 8-9, the $PM_{2.5}$ captured on the filter includes any particulate matter condensed and/or formed during the dilution and cooling of the sample gas. Because the sample gas is cooled and diluted to near ambient conditions, aliquots of the diluted sample gas upstream of the 142-mm filter can be collected for analyses using ambient air methodologies. This method was designed specifically to allow for the collection of particulate matter samples for use in developing speciation profiles to be used in conjunction with the ambient air speciation sampling network.

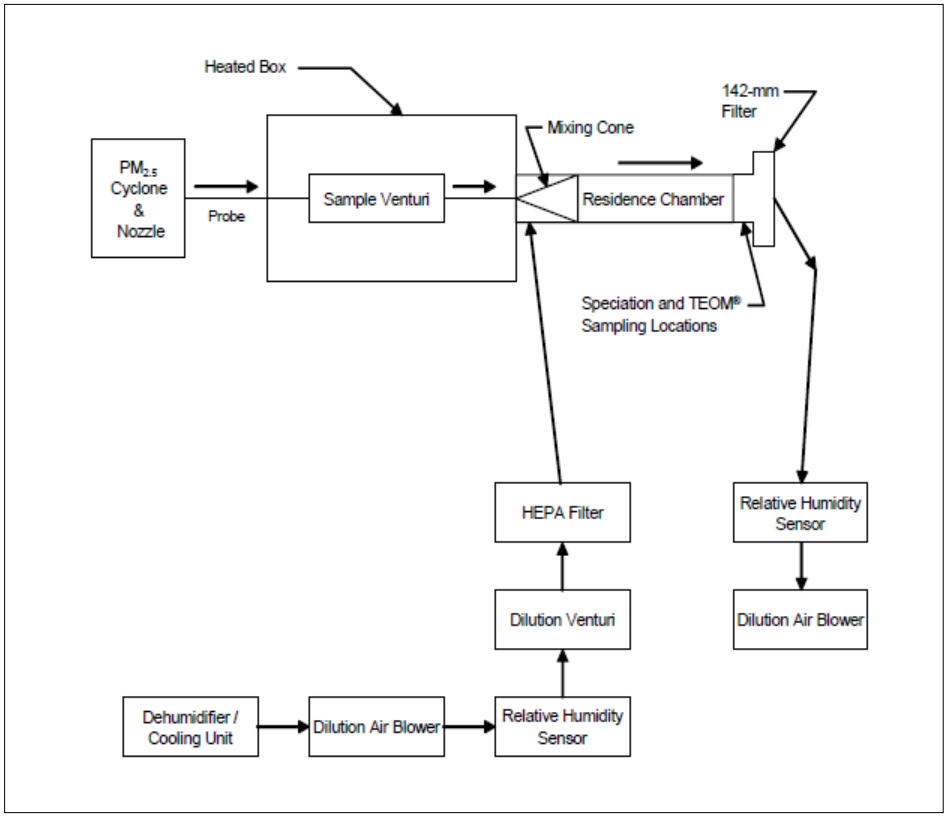

Figure 8-9. Dilution sampling train schematic.

The sources for which this method is most applicable are those with exhaust gas temperatures above approximately 35°C (95°F) and below 425°C (797°F). The sources of particulate matter

emissions that meet this criteria include but are not limited to the following:

- Fossil-fuel fired steam generators
- Industrial, Commercial and Institutional boilers
- Portland cement kilns and clinker coolers
- Municipal waste combustors
- Medical waste incinerators
- Stationary gas turbines
- Stationary reciprocating internal combustion engines
- Petroleum refinery catalytic cracking units
- Fertilizer (Nitrate, Sulfate,& Phosphate) production facilities
- Acid (Nitric, Phosphoric, & Sulfuric) production plants
- Chemical wood pulping plants
- Reconstituted wood products plants
- Lime manufacturing plants
- Wool fiberglass and mineral wool manufacturing plants
- Glass manufacturing plants
- Primary and secondary metals smelting and refining facilities
- Gray iron and steel foundries
- Carbon black production furnaces

8.3 SUMMARY

SAMPLING TRAIN CONFIGURATIONS AND PM_{10} SAMPLING METHODS

This chapter covered the following topics:

- Gas stream characteristics.
- Selection of a gaseous control system.
- Control technologies to remove gaseous contaminants from gas streams.
- Techniques to control gaseous contaminants.

BIBLIOGRAPHY

Office of the Federal Register National Archives and Records Administration. 1992. Requirements for preparation, adoption, and submittal of implementation plans. *Code of Federal Regulations*, Title 40 (Protection of Environment), Part 51, Appendix M.

Office of the Federal Register National Archives and Records Administration. 1992. Standards of performance for new stationary sources. *Code of Federal Regulations*, Title 40 (Protection of Environment), Part 60, Appendix A.

OAQPS/EMAD/EFPAG Briefing. 2005 Conditional Test Method 039, "*Measurement of PM2.5 and PM10 Emissions by Dilution Sampling* (Constant Sampling Rate Procedures)."

CHAPTER 9

9.0 PARTICLE SIZING

9.1 OVERVIEW

PURPOSE

The purpose of this chapter is to review and understand the operation of particle sizing measurement devices as well as when these devices are needed.

LEARNING OBJECTIVES

At the conclusion of this training, students will be able to:

- Identify devices used for characterizing particulate matter sizes in stacks and ducts.
- Understand the operation of particulate matter sizing devices.
- Reduce and analyze data collected from particulate matter sizing devices.
- Identify the need and regulatory drivers for particulate sampling devices.
- Characterize particles by their properties including mass, volume, surface area, aerodynamic diameter, and distribution.

9.2 DETERMINING PARTICLE SIZE AND MASS

INTRODUCTION

In the field of air pollution measurement and control, particles are characterized by their physical, optical, and chemical properties. In Method 5, we are primarily concerned with the size and mass of the particles. The size is important in our isokinetic sampling considerations and the mass of particles collected relates to the reported results of Method 5-particulate mass concentration. The optical properties of a particle are also related to the particle size and are important when considering issues of opacity. The chemical and toxic properties of a particle are important also. However, as we have seen in Chapter 1, the size of a particle will determine whether or not it will remain in the human pulmonary system and cause damage. The primary distinguishing physical feature of any particle is, therefore, the particle size.

In terms of PM_{10} and $PM_{2.5}$ emission standards and the dependence of pollution control equipment efficiency on particle size, knowledge of flue gas particle size distributions has become increasingly important.

PARTICLE SIZE

A particle's size is usually expressed in terms of a diameter. The most widely used unit describing particle diameter is the micron.

1 micron (µm) = 0.001 mm = 10^{-4} cm = 10^{-6} m
1000 µm = 1.0 mm = 0.1 cm

A common assumption holds that particles in flue gases are spherical and that the particle diameter represents the diameter of a sphere. However, except for liquid droplets and metallurgical fumes, particles may be non-spherical. To deal with such particles, it becomes necessary to define an "equivalent diameter" that depends upon the geometric or aerodynamic properties of the particle.

Diameters, volumes, and surface areas of particle sizes commonly found in emission testing and air pollution control, are shown in Table 9-1.

Table 9-1. Spherical particle diameter, volume, and area.

Particle Diameter (µm)	Particle Volume (cm^3)	Particle Area (cm^2)
0.1	5.3×10^{-16}	3.14×10^{-10}
1.0	5.3×10^{-13}	3.14×10^{-8}
10.0	5.3×10^{-10}	3.14×10^{-6}
100.0	5.3×10^{-7}	3.14×10^{-4}
1,000.0	5.3×10^{-4}	3.14×10^{-2}

The data in Table 9-1 indicates that particles of 1000 micrometers are 1,000,000,000,000 (one trillion) times larger in volume than 0.1 micrometer particles.

Assume that all of the particles are simple spheres. The small raindrop shown in Figure 9-1 has a diameter of 1000 micrometers. The 100-micrometer particle, which is shown next to the raindrop, looks like a small speck compared to the office pushpin in the background. However, both the raindrop and the 100-micrometer particle are on the large end of the particle size range of interest in the air pollution field.

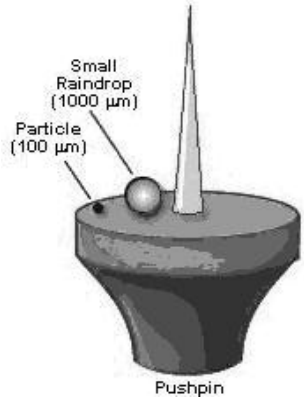

Figure 9-1. Size comparison: raindrop vs. 100µm particle.

In air pollution control, it is necessary to use a particle size definition that directly relates to how the particle behaves in a fluid such as air. The term "aerodynamic diameter" has been developed by aerosol physicists in order to provide a simple means of categorizing the sizes of particles having different shapes and densities with a single dimension. The aerodynamic diameter is the diameter of a spherical particle having a density of 1 gm/cm^3 that has the same inertial properties (i.e., same terminal settling velocity or falling speed [Figure 9-2.] in the gas as the particle of interest). The aerodynamic diameter is a function of the physical size, shape, and density of the particle. The aerodynamic diameter for all particles greater than 0.5 micrometers can be approximated using the equation below.

(Eq. 9-1) $$d_{pa} = d_{ps} \sqrt{\rho_p}$$

Where: d_{pa} = aerodynamic particle diameter, µm
d_{ps} = stokes diameter, µm
ρ = particle density, gm/cm^3

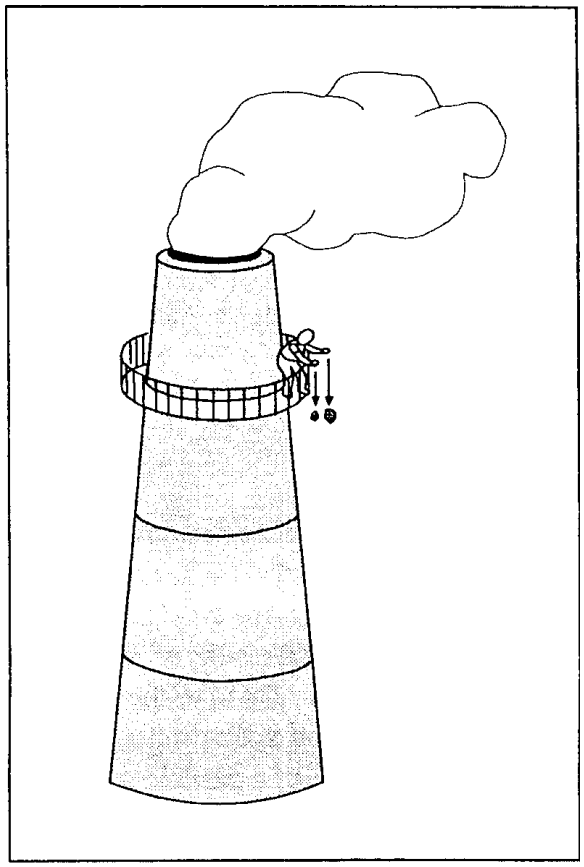

Figure 9-2. Aerodynamic diameter.

Particle density affects the motion of a particle through a fluid and is taken into account in Equation 9-1. The Stokes diameter for a particle is the diameter of the sphere that has the same density and settling velocity as the particle. It is based on the aerodynamic drag force caused by the difference in velocity of the particle and the surrounding fluid. For smooth, spherical particles, the Stokes diameter is identical to the physical or actual diameter.

Inertial sampling devices such as cascade impactors are used for particle sizing (see Figure 9-3). These sampling devices determine the aerodynamic diameter and will be discussed in the next section. The term "aerodynamic diameter" is useful for all particles including fibers and particle clusters. It is not a true size because "non-spherical" particles require more than one dimension to characterize their size. Particles that appear to have different physical sizes and shapes can have the same aerodynamic diameter as illustrated below.

Figure 9-3. Mark III in-stack cascade mpactor.

Table 9-2. Aerodynamic diameters of differently shaped particles.

Solid Sphere	P ρ_p = 2.0 gm/cm^3 d_{ps} = 1.4 μm	d_{pa} = 2 μm
Hollow Sphere	ρ_p = 0.5 gm/cm^3 d_{ps} = 2.8 μm	
Irregular Shape	ρ_p = 2.4 gm/cm^3 d_{ps} = 1.3 μm	

Note: ρ_p = particle density
d_{ps} =stokes particle diameter
d_{pa} = aerodynamic diameter

Particles that appear to have different physical sizes and shapes can have the same aerodynamic diameter as illustrated in Table 9-3.

Table 9-3. Aerodynamic diameters of particles with different densities.		
Low-density particle	ρ_p = 1 gm/cm^3 d_{ps} = 2 µm	d_{pa} = 2.0 µm
Medium-density particle	ρ_p = 2 gm/cm^3 d_{ps} = 2 µm	d_{pa} = 2.8 µm
High-density particle	ρ_p = 3 gm/cm^3 d_{ps} = 2 µm	d_{pa} = 3.5 µm

EPA PARTICLE SIZE TERMINOLOGY

Since the range of particle sizes of concern for air emission evaluation is quite broad it is beneficial to divide this range into smaller categories. Defining different size categories is useful since particles of different sizes behave differently in the atmosphere and the respiratory system. The EPA has defined four terms for categorizing particles of different sizes. Table 9-4 displays the EPA terminology along with the corresponding particle sizes.

Table 9-4. EPA terminology for particle sizes.

EPA Description	Particle Size
Supercoarse	$d_{pa} \geq 10$µm
Coarse	2.5 µm $\leq d_{pa} \leq$ 10 µm
Fine	0.1 µm $\leq d_{pa} \leq$ 2.5 µm
Ultra-fine	$d_{pa} \leq$ 0.1 µm

Figure 9-4 provides a visual comparison of the size of a fine particle (1.0 µm), coarse particle (10 µm), and a supercoarse particle (100 µm). There is a substantial difference in size between these particles, all of which are considered moderate-to-large in air pollution control.

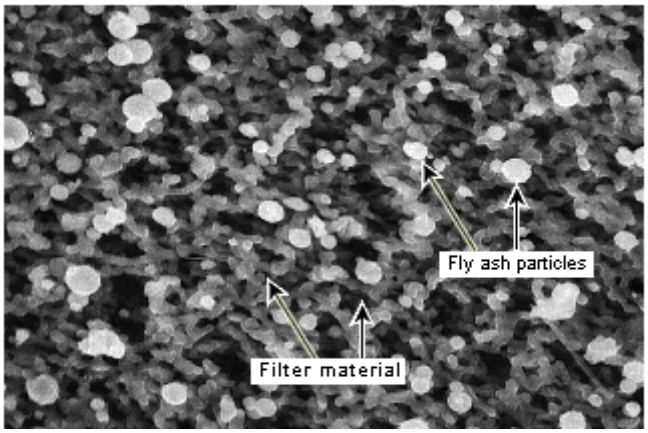

Figure 9-4. Photomicrograph of flyash particles on an MCE filter .

(Image courtesy of Air Control Techniques, P.C.).

Regulated Particle Matter Categories

In addition to the terminology provided in Table 9-4 the EPA also categorizes particles as follows:

- Total Suspended Particulate Matter (TSP)
- PM_{10}
- $PM_{2.5}$
- Particles less than 0.1 µm
- Condensable Particulate Matter

These particle categories are important because particulate matter is regulated and tested in ambient air and from emission sources under these various categories. Figure 9-5 displays a typical size distribution of atmospheric particulate matter that combines the two classification schemes discussed previously.

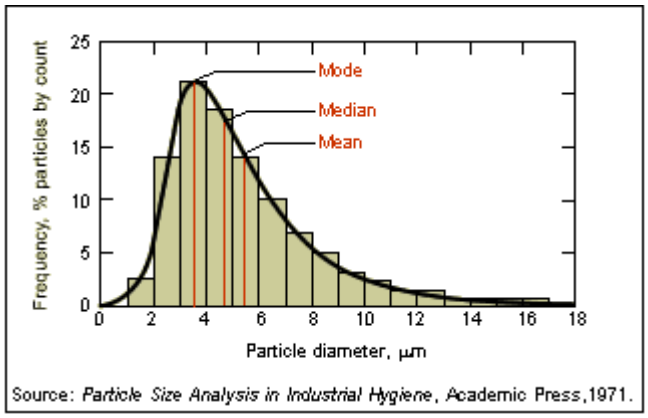

Figure 9-5. Ambient particulate matter size distributions.

INERTIAL PARTICLE SIZING

An inertial impactor is the most frequently used device for flue gas particle size determinations. The impactor measures the distribution of different particle sizes in the flue gas. In practice, the impactor is attached to the end of a sample probe to collect particles on a number of in-stack filters. The operating principle of an impactor is illustrated in Figure 9-6.

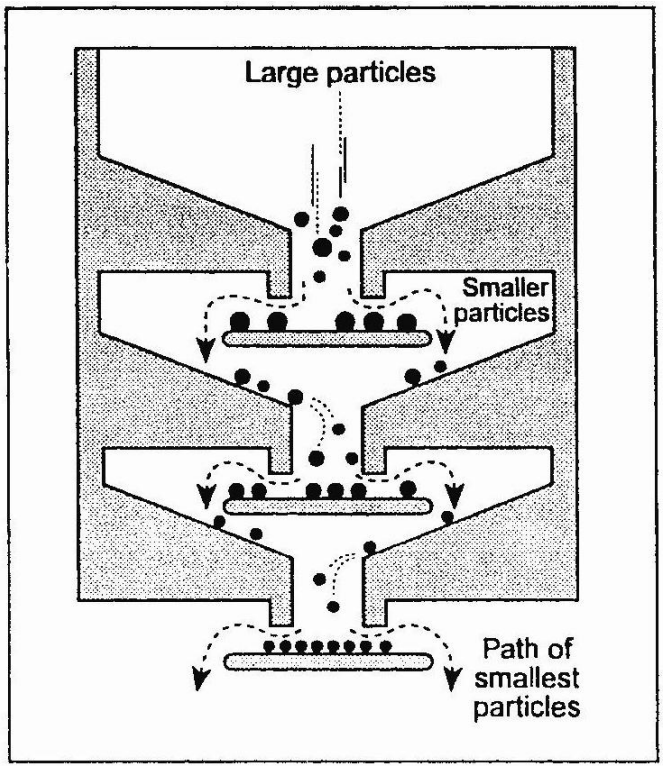

Figure 9-6. Operation of an inertial impactor.

The device is constructed using a succession of stages. A stage consists of an orifice plate containing a pattern of small orifice openings. In each stage, the gas stream passes through the orifice opening and forms a jet that is directed toward an impaction plate. The larger particles will impact on the plate if their momentum is large enough to overcome the drag of the gas stream as it moves around the plate. The orifice openings in each successive plate are smaller than those in the preceding stage. The velocity of the gas stream and the particles in the stream increase as the stream advances through the impactor. Eventually, the smaller particles acquire enough momentum to break through the gas streamlines to impact on a plate. Each plate collects particles over a size range determined by the orifice size and gas stream velocity. The smallest particles are caught on a back-up filter.

Typical cascade impactors consist of a series of stacked stages and collection surfaces. Depending on the calibration requirements, each stage contains from one to as many as 400 precisely drilled jet orifices, identical in diameter in each stage, but decreasing in diameter in each succeeding stage (Figure 9-7).

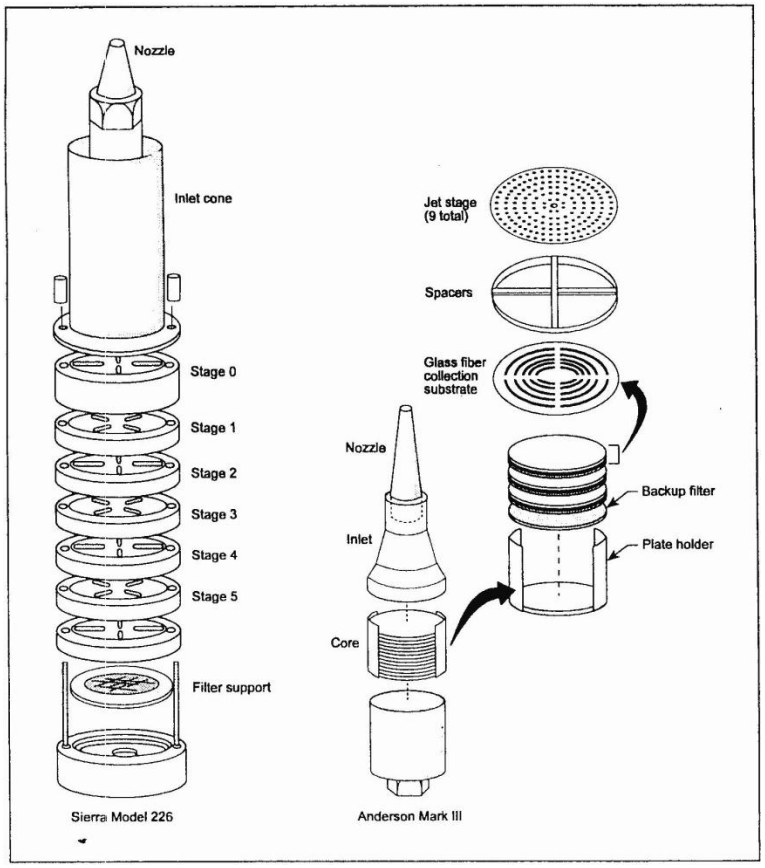

Figure 9-7. Two types of commercial cascade impactors.

Particles are collected on pre-weighed, individual stages-usually filters made of glass fiber or thin metal foil. Adhesive, electrostatic, and Van der Waals forces hold the particles to the collection surfaces and to each other. The particles are not blown off the collecting plates by the jets of gas because these jets follow laminar flow paths. Because there are no turbulent areas, a dead air space results over and around the samples. Particles that bounce or are otherwise difficult to collect may require the addition of grease to the collection filter so that the particles will "stick."

Once the sampling is completed, the collection filters are weighed. A particle size distribution is obtained by calculating the relative mass of particulate matter collected on each stage. The effective range for measuring the aerodynamic diameter using an impactor is generally between 0.3 and 20 µm Some vendors have claimed size fractionation as small as 0.02 µm with the use of 20 or more stages.

Impactors are one of the most useful devices for determining particle size because of their compact arrangement and their ability to draw a sample directly from the flue gas. This in-situ device is generally not subject to biases created by electrostatic and thermal gradients, particle agglomeration in the sample probe, or new particle formation at lower than stack temperature. Also, the particle fractionation occurring in the impactor is based on the particle aerodynamic diameter. The resultant particle size distribution is therefore directly relevant to particle behavior in air pollution control equipment.

The particle size for a given stage is a "fractionation size," corresponding to size cutoff with a percentage of different size particles above or below this size cutoff. The size of particles collected on each stage having at least a 50% collection efficiency for a given set of impactor conditions is called the D_{50}. A D_{50} for a collection stage can be maintained only if the particle-sizing device is operated at a gas flow rate that does not cause fracturing or scouring of particles. If the sample gas flow rate is too high, particles can be broken upon impact with the collection stage, or settled particles could be re-entrained into the gas stream. This would create significant errors in collection efficiency.

Other problems, such as particle bounce, overloading, and deposition of particles on the impactor walls, and the diffusion of smaller particles between stages, can cause errors in the sizing measurements. The use of a cascade impactor requires both the application of careful technique and knowledge of the particle characteristics. The source tester performing this method should be trained and familiar with the considerable body of technical literature that addresses its application and limits.

Sampling Cyclones

Cyclone samplers operate in the same manner as cyclones used for PM collection, in that the gas with PM is forced to spin so that some of the PM hits the cyclone walls and is collected (see Figure 9-8). PM above a certain size specific to the cyclone will be largely collected and particles below a certain size will mostly pass through the cyclone uncollected. Individual sampling cyclones are only able to determine the mass of particles either above or below a specific size.

Figure 9-8. In-stack cyclone.
(Source: New Star Environmental)

As discussed in Chapter 8, EPA Methods 201 and 201A use cyclones to quantify PM_{10} and $PM_{2.5}$. Figure 9-9 shows an EPA Method 201A train which includes cyclones for PM_{10} and $PM_{2.5}$

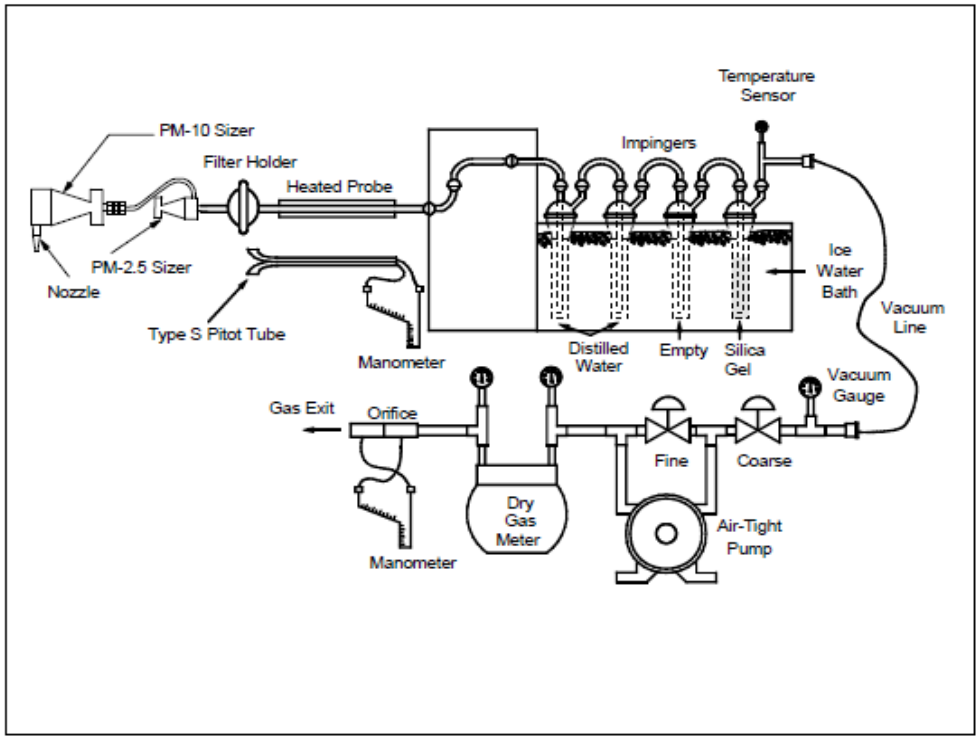

Figure 9-9. EPA Method 201A sampling train.

Size Distribution of Bulk Samples

Particulate matter can be collected from the source and later analyzed for the particle size distribution in the laboratory using various available techniques. These techniques should be used with caution, however, because the original flue gas particle distribution may be altered by agglomeration, particle breakup, chemical reactions, or loss of volatiles that occur during sample collection and storage.

Also, artifact mass may be formed from filter materials, such as glass fiber, that oxidize in contact with acid gases in the sample air. Therefore, the size distribution results obtained with these methods are meaningful only if the effects of sample collection and storage are negligible or clearly known.

Particle sizing of stack particulates, collected on sampling filters can be determined by scanning electron microscopy (SEM). The sampled source's size distributed particle volume is estimated from the size distribution determined by the SEM. The SEM can be used for particles down to about 0.01 μm in diameter.

ELECTRICAL MOBILITY ANALYZERS

Measurements of particle size distributions can also be made by taking advantage of the electrical properties of the particles. If a particle is electrically charged, either by natural processes or by the addition of a charge by some device, its time of flight will be influenced by an electric field. The particle's time of flight in an electric field is known as **drift velocity** and the ratio of the drift velocity to the electric field strength is known as its **electrical mobility**:

(Eq. 9-2) $$\mu_\varepsilon = \frac{v_d}{\varepsilon}$$

Where: v_d = drift velocity (cm/sec)

ε = electric field strength (volt/cm)

μ_ε = electrical mobility (cm^2/volt-sec)

For singly charged particles, the electrical mobility decreases as the particle size increases. In concept then, an electrical mobility analyzer can be constructed by first charging the particles to be analyzed, injecting them into an electric field and measuring their time of flight (Figure 9-10.)

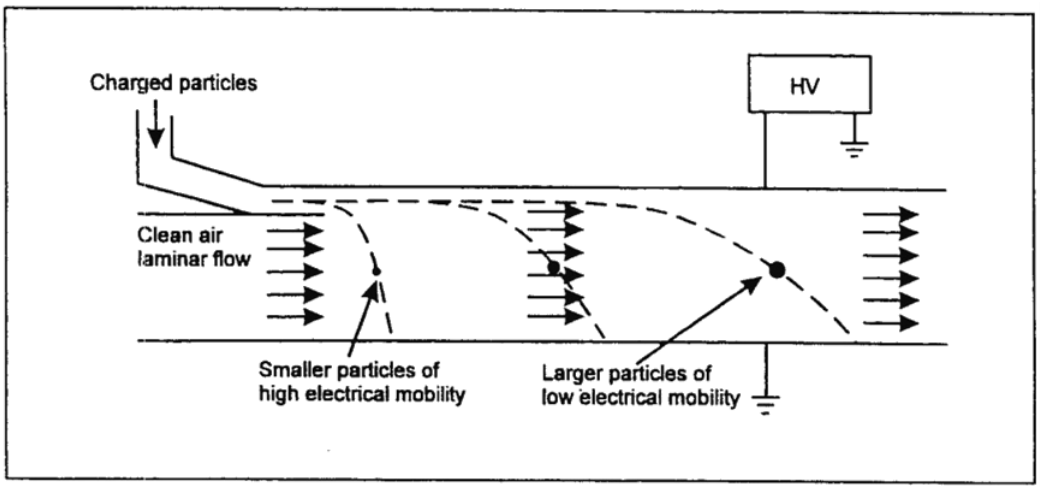

Figure 9-10. Principle of electrical mobility analyzers.

In, a parallel plate electrical mobility spectrometer (Figure 9-10), the particles are charged and injected between the plates. A uniform electric field, ε, is placed across the plates, transverse to the motion of the particles. The particle mobility is then determined by detecting where a given size particle settles on the grounded, bottom plate.

Several different types of electrical mobility analyzers have been developed for ambient and source particle sizing studies. The electrical aerosol analyzer (EAA) has been used in source measurements, however; the sample extracted from the stack must first be diluted to a concentration between 1 and 1000 $\mu g/m^3$.

Electrical mobility analyzers measure submicron particles (from 0.003 to 1 µm) well. However, larger particles must first be removed. Problems also occur in charging the particles to a known value and calibration tables are necessary. These tables have been developed for spherical particles, and have limited use when irregularly shaped particles, such as fibers, are to be analyzed.

OTHER TECHNIQUES

A number of other techniques have been used for particle-sizing measurements (Willeke, 1993). However, many of the methods are only feasible for the analysis of particulate matter in ambient air. Other methods, promising for source measurements, have not been commercially developed. Optical methods, such as those based on the phenomenon of Mie scattering (see Chapter 10), and multi-wavelength transmissometry have been widely studied and show promise for the in-situ measurement of particle size. However, such instruments are expensive and the analysis complicated. At present there exists no great commercial need for particle size measurement that the cascade impactor cannot fulfill. Consequently, most of the advanced work in this area is performed in university and government research laboratories.

DATA ANALYSIS

A variety of methods exist for presenting particle size data, the most common being the use of frequency or cumulative frequency distribution curves.

A **frequency distribution curve** plots the weight of the particles in a given, incremental size range, against the average particle size of that range (Figure 9-11a.). Most flue gas particle distributions do not follow a simple bell-shaped, normal probability curve. Instead, they are quite often "log-normally" distributed, as shown in Figure 9-11a. If the particle size is plotted on a logarithmic scale (the x-axis) for such distributions, the resultant curve will appear as a typical bell-shaped probability curve (Figure 9-11b).

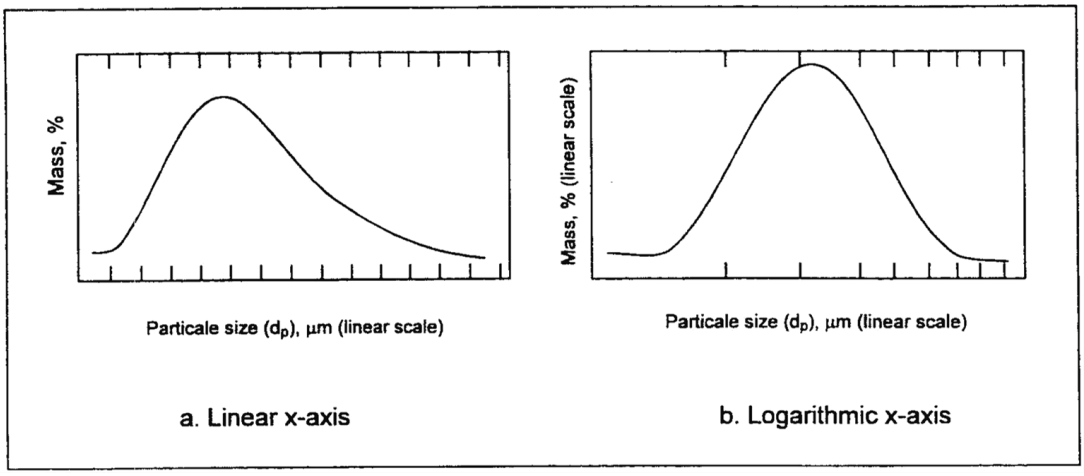

Figure 9-11. Typical log normal frequency distribution curves for flue gas particles.

A histogram (shown in Figure 9-11) is one of the simplest ways to display a particle size distribution. It is a particle frequency distribution that shows the percentage of particles found in each size range. Frequency can be plotted (on the Y-axis) by number count, surface area, or mass. This lesson focuses primarily on particle distributions based on the mass of the particles. The skewed distribution shown in Figure 9-12 is typically encountered in the field of air pollution control.

The median, arithmetic mean, and mode help characterize the arithmetic mass distribution. The **median** particle size (**mass median particle diameter**) is the particle diameter that divides the frequency distribution in half; 50% of the aerosol mass has particles with a larger diameter, and

50% of the aerosol mass has particles with a smaller diameter. The **arithmetic mean diameter**, usually simply termed the mean diameter, is the arithmetic average particle diameter of the distribution. The value of the arithmetic mean is sensitive to the quantities of particulate matter at the extreme lower and upper ends of the distribution. The **mode** represents the value that occurs most frequently in a distribution. In particle size distributions, the mode is the particle diameter that occurs most frequently.

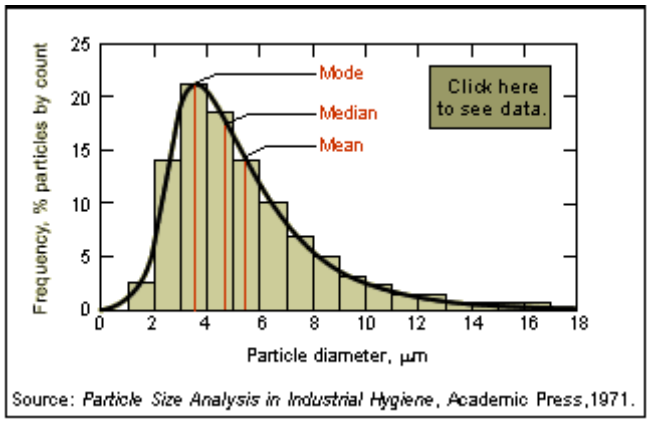

Figure 9-12. Particle histogram.

Table 9-5. Particle size and frequency data used for constructing histogram (Figure 9-12).

Class Interval (µm)	Observed Number	Frequency (%)
0-1	0	0
> 1-2	8	2
> 2-3	56	14
> 3-4	84	21
> 4-5	72	18
> 5-6	56	14
> 6-7	40	10
> 7-8	28	7
> 8-9	20	5
> 9-10	12	3
> 10-11	8	2
> 11-12	4	1
> 12-13	4	1
> 13-14	2	0.5
> 14-15	2	0.5
> 15-16	2	0.5
> 16-17	2	0.5

The **cumulative frequency distribution** (Figure 9-12) is a plot of the fraction of the total weight of particles that have a diameter less than a given size, plotted against that size.

It is not always possible to graph equidistant particle size ranges on a logarithmic scale. In many cases the size ranges are determined by the data collection method (e.g., data obtained from a cascade impactor). Since the observed particulate matter distribution approximates a lognormal distribution, it is often beneficial to work with particle size distributions on a logarithmic basis.

The terms, **geometric mean diameter** and **geometric standard deviation**, are substituted for arithmetic mean diameter and standard deviation when incorporating logarithms of numbers. When the frequency of the particle size distribution is based on mass, the more specific term **geometric mass mean diameter** is used.

The geometric mass mean diameter is the diameter of a particle that has the logarithmic mean for the size distribution. It is the *n*th root of the product of *n* terms. The geometric mass mean diameter is expressed in Equation 9-3 and Equation 9-4.

(Eq. 9-3) $$\log d_g = \frac{\log d_{pa(1)} + \log d_{pa(2)} + \log d_{pa(3)} + \ldots + \log d_{pa(n)}}{n}$$

(Eq. 9-4) $$d_g = \sqrt[n]{d_{pa(1)} \times d_{pa(2)} \times d_{pa(3)} \times \ldots \times d_{pa(n)}}$$

Where: d_{pa} = aerodynamic particle diameter, µm
d_g = geometric mass mean diameter, µm
n = number of particles in distribution

The geometric mass mean diameter is equivalent to the mass median diameter for lognormal graphs due to the bell-shaped symmetrical curve produced. The geometric standard deviation of a lognormal distribution is determined by dividing the mass median particle diameter by the particle size at the 15.78 percent probability *or* by dividing the particle size at the 84.13 percent probability by the mass median particle diameter.

(Eq. 9-5) $$\sigma_g = \frac{d_{50}}{d_{15.78}}$$

(Eq. 9-6) $$\sigma_g = \frac{d_{84.13}}{d_{50}}$$

Where: σ_g = geometric standard deviation of particle mass distribution
d_{50} = mass median particle diameter, µm
$d_{15.78}$ = diameter of particle that is equal to or less than 15.78% of the mass of particles present, µm
$d_{84.13}$ = mass median particle diameter, µm

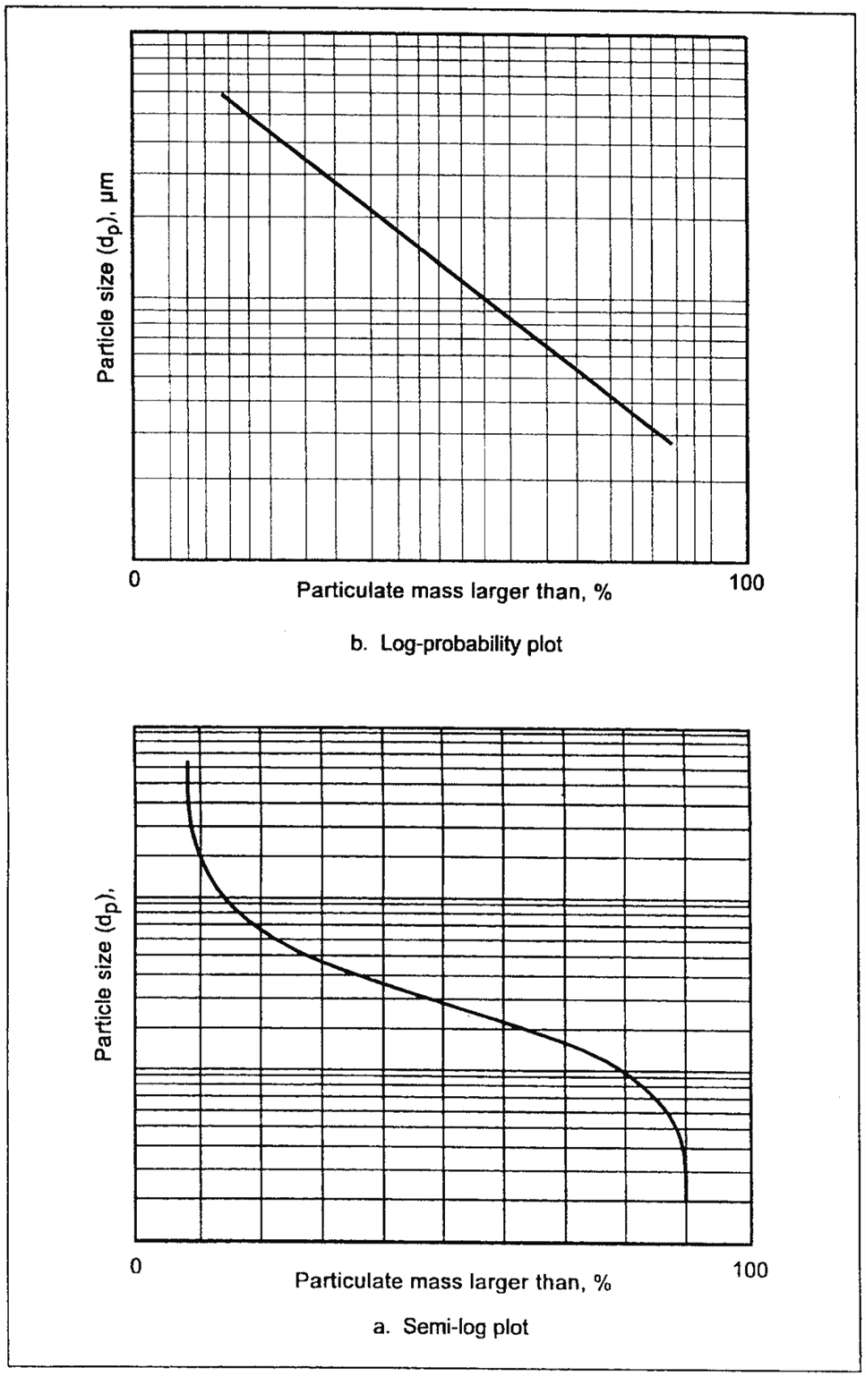

Figure 9-13. Cumulative frequency distribution curve in chapter.

In a cumulative plot, the weight of the particles collected on each stage is presented as a percent of the total particulate catch. The data are then plotted as percent versus particle diameter. Figure 9-13a. shows a plot for a typical log-normal distribution. For a log-probability plot of such a distribution (see Figure 9-13b.), the resultant curve is linear graphical device that greatly aids in data analysis.

The majority of inertial impactor particle size data reduces to the use of D_{50} data. The particles on a given stage are assumed to have a diameter equal to the calculated D_{50} for that stage. Once the D_{50} for each stage has been determined, the weight data can be used to develop a cumulative plot of the particle size distribution.

The following example demonstrates the determination of the mass median particle diameter and the geometric standard deviation.

Table 9-6. Particle size and concentration data for Figure 9-14.

Size Range (µm)	d_{pa} min (µm)	Concentration (µg/m^3)	% Mass in Size Range	Cum. % Mass < d_{pa} min
0-2	-	1.0	0.5	-
2-4	2	14.5	7.25	0.5
4-6	4	24.7	12.35	7.75
6-10	6	59.8	29.90	20.1
10-20	10	68.3	34.15	50.0
20-40	20	28.9	14.45	84.13
> 40	40	2.8	1.4	98.6
		Total = 200		100.0

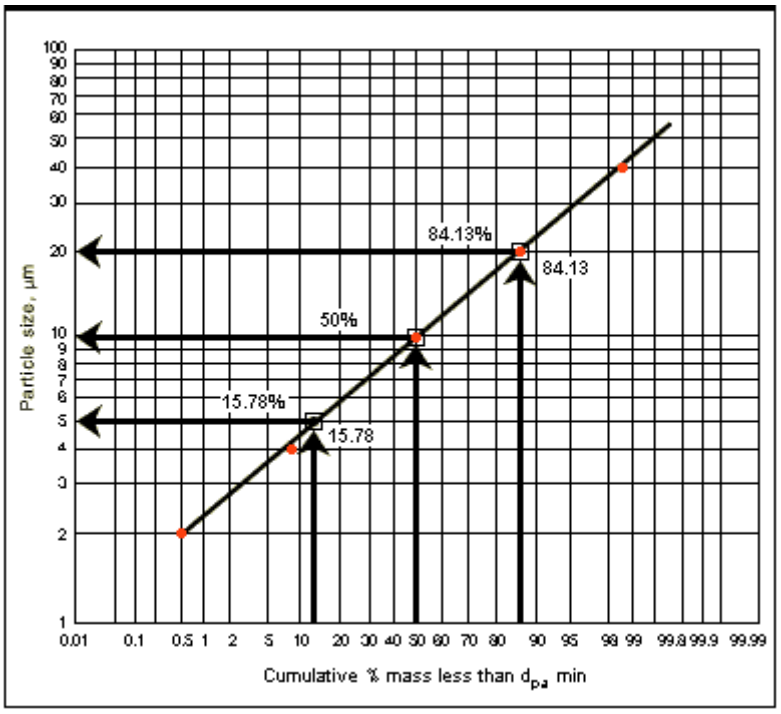

Figure 9-14. Particle size distribution log-probability plot form data in Table 9-6.

The straight line indicates that the particle size data set is lognormal and the approximate particle size at 15.78, 50, and 84.13 percent probability can be determined. The mass median particle diameter can be determined as follows: Mass median particle diameter = d_{50} = 10µm.

The geometric standard deviation of the particle mass distribution can also be determined using Equations 9-5 or 9-6 as shown in the next equation.

$$\sigma_g = \frac{d_{50}}{d_{15.78}} = \frac{10\mu m}{5\mu m} = 2.0 \text{ or } \frac{d_{84.13}}{d_{50}} = \frac{20\mu m}{10\mu m} = 2.0$$

Particle size distributions resulting from complex particle formation mechanisms or several simultaneous formation mechanisms may not be lognormal. As shown in Figure 9-15, these distributions may exhibit more than one peak (multi-modal). In these cases, plots of the data on log-probability paper will not yield a straight line. In order to characterize this type of particle size data, it may be necessary to treat the data as two separate lognormal distributions

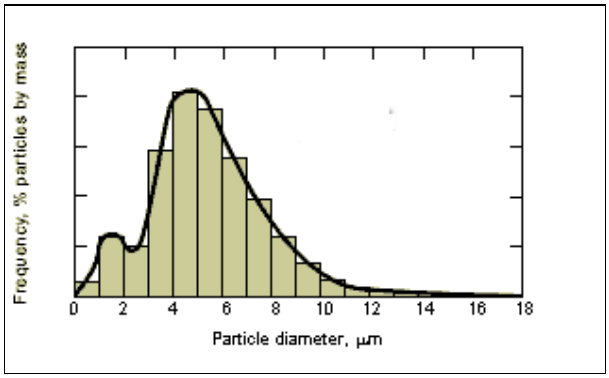

Figure 9-15. Histogram of a bi-modal particle size distribution.

9.3 SUMMARY

CONTROL TECHNIQUES FOR GASEOUS CONTAMINANTS

This chapter covered the following topics:

- Determining Particle Size and Mass.
- EPA Particle Size Terminology.
- Inertial Particle Sizing.
- Particle Size Measurement Devices.
- Particle Size Distributions and Calculations.

BIBLIOGRAPHY

Beachler, D.S., and J.A. Jahnke. 1981. *Control of Particulate Emissions*. (APTI Course 413 Student Manual.) EPA 450/2-80-006. U.S. Environmental Protection Agency.

Cushing, K.M., G.E. Lacey, J.D. McCain, and W.B. Smith. 1976. *Particulate Sizing Techniques for Control Device Evaluation: Cascade Impactor Calibrations*. EPA 600/2-76-280. U.S. Environmental Protection Agency.

Felix, L.G., G.I. Clinard, G.E. Lacey, and J.D. McCain. 1977. *Inertial Cascade Impactor Substrate Media for Flue Gas Sampling*. EPA 600/7-77-060. U.S. Environmental Protection Agency.

Harris, B. 1977. P*rocedures for Cascade Impactor Calibration and Operation in Process Streams*. EPA 600/2-77-004. U.S. Environmental Protection Agency.

Lundgren, D.A., and W.D. Balfour. 1980. *Use and Limitation of Instack Impactors*. EPA 600/2-80-048. U.S. Environmental Protection Agency.

Patterson, R.G., A. Riersgard, and C. Calvert. 1978. *Effects of Charged Particles on Cascade Impactor Calibrations*. EPA 600/7-78-195. U.S. Environmental Protection Agency.

Smith, W.B., K.M. Cushing, G.E. Lacey, and J.D. McCain. 1975. *Particle Sizing Techniques for Control Device Evaluation*. EPA 650/2-74-102a. U.S. Environmental Protection Agency.

Smith, W.B., P.R. Cavanaugh, and R.R. Wilson. 1978. *Technical Manual: A Survey of Equipment and Methods for Particulate Sampling in Industrial Process Streams*. EPA 600/7-78-043. U.S. Environmental Protection Agency.

Stockman, J.D., and E.G. Fochtman (Eds.). 1977. *Particle Size Analysis*. Ann Arbor, MI: Ann Arbor Science Publishers.

U.S. Environmental Protection Agency. 1979. *Advances in Particle Sampling and Measurement*. EPA-600/7-79-065.

U.S. Environmental Protection Agency. 1980. *Advances in Particle Sampling and Measurement*. EPA 600/9-80-004.

U.S. Environmental Protection Agency. 1982. *Proceedings of Third Symposium on the Transfer and Utilization of Particulate Control Technology*. EPA 600/9-82-005d.

U.S. Environmental Protection Agency, *Integrated Policy and Strategies Group Air Quality Strategies and Standards Division "Stationary Source Control Techniques Document for Fine Particulate Matter"*. Submitted by: EC/R Incorporated October 1998.

U.S. Environmental Protection Agency website http://www.epa.gov/air/oaqps/

Willeke, K., and P. A. Baron. 1993. *Aerosol Measurement: Principles, Techniques and Applications*. New York: Van Nostrand Reinhold.

Wilson, R.R., P.R. Cavanaugh, K.M. Cushing. W.E. Farthing, and W.B. Smith. 1979. *Guidelines for Particulate Sampling in Gaseous Effluents from Industrial Processes*. EPA 600/7-79-028. U.S. Environmental Protection Agency.

CHAPTER 10

10.0 CONTINUOUS PARTICULATE EMISSIONS MONITORING

10.1 OVERVIEW

PURPOSE

The purpose of this chapter is to explore the methods and requirements of continuous emission monitoring.

LEARNING OBJECTIVES

At the conclusion of this training, students will be able to:

- Recognize the requirements for continuous monitoring of particulates.
- Identify the appropriate measurement techniques for monitoring particulates.
- Recognize the instruments and performance standards for monitoring particulates.
- Recognize ISO 10155 test methods used in continuous mass emissions monitoring.
- Recognize procedures for performing statistical analysis.

OVERVIEW

In the preceding chapters, we have discussed manual reference methods. Although these methods can be used to provide valuable source information, the data obtained may not be necessarily representative of day-to-day operating conditions. Due to the planning and preparations necessary for the manual methods, the source is usually notified prior to the actual testing. This lead time allows the source to optimize both operations and control equipment performance in order to pass the tests. Consequently, the tests may not be truly representative of actual source performance.

As a result of this problem, since 1971, the U.S. EPA has, promulgated numerous continuous emission monitoring (CEM) requirements for stationary sources (Jahnke, 1993). These requirements have focused primarily on the continuous measurement of gases such as carbon monoxide (CO), sulfur dioxide (SO_2), nitric oxides (NO_x), and flue gas opacity. With the release of Performance Specification 11 (PS-11), "Specifications and Test Procedures for Particulate Matter Continuous Emission Monitoring Systems at Stationary Sources," in January of 2004, several regulations have included continuous particulate matter (PM) monitoring to demonstrate compliance with PM emission limitations. For example, New Source Performance Standards for Electric Utility Steam Generating Units and Portland Cement Manufacturing include PM standards with compliance demonstrations using PS-11. A few states have also required continuous mass measurement systems through operating permits or through negotiating agreements; however, these applications have not

been extensive. Continuous mass measurement requirements are more common in Europe, particularly in Germany where both the regulatory and technical sophistication of continuous mass measurement has become quite advanced.

PS–11 is different from other performance specifications because it is based on a technique of correlating PM CEMS responses relative to emission concentrations determined by the reference method. This technique is called “the correlation.” This differs from other CEMS used to measure gaseous pollutants (e.g., CO, NO_x, etc.) that have available calibration gases of known concentration. Because the type and characteristics of PM vary from source to source, a single PM correlation, applicable to all sources, is not possible.

The problem with continuous mass monitoring of PM is that a method does not exist that can measure mass both directly and continuously. An opacity monitor measures the ability of a flue gas to transmit light. A light-scattering instrument measures the light intensity scattered back from flue gas particles. A beta gauge measures the transmission of electrons through a spot of collected particulate matter. All of these commercially available continuous mass monitoring instruments produce an instrument output that is something other than "grams per cubic meter." This output, however, can be correlated to the particulate concentration.

To continuously measure particulate mass, one first chooses an instrument that measures some property of the particles in the flue gas. The instrument readings are correlated with manual particulate source test method data from Method 5 or Method 17. Source and control equipment operating conditions are varied in order to obtain a range of particulate concentrations. A graph, or correlation, is then made between the instrument response and the manually determined particulate concentrations.

In this chapter, we will discuss commercially available techniques currently used to measure flue gas particulate parameters. We will also discuss the most generally accepted correlation method, the International Standards Organization (ISO) continuous mass measurement standard, ISO 10155.

10.2 MEASUREMENT TECHNIQUES

INTRODUCTION

Measurement techniques used in continuous particulate monitor systems are given in Table 10-1.

Table 10-5. Automated measurement methods for particulate matter.

Optical	Light Attenuation (Opacity Monitors) Light Scattering
Nuclear	Beta Ray Attenuation
Electrical	Contact Charge Transfer
Electromechanical (Loaded Oscillator)	Piezoelectricity Cantilevered Beam

Of the methods listed in Table 10-1, the light attenuation technique (using opacity monitors) has been the most extensively studied. Opacity-mass correlation methods are routinely used in Germany and occasionally in the United States. The light-scattering and beta gauge techniques are increasingly being applied due to the good correlations that can be obtained.

OPTICAL – LIGHT ATTENUATION (OPACITY MONITORS)

In an opacity monitor, the light attenuation or transmittance through the flue gas is determined by passing a light beam through the stack. The intensity of the light returning, I, is compared with a previously determined reference signal, I, to give the transmittance $T = I/I_0$. Because the transmittance of the light beam is the parameter that is actually measured, the opacity monitor is often called a **transmissometer**. Transmittance and opacity are related by the expression:

(Eq. 10-1) $T = 1.0 - Op$

Where: T = the fractional transmittance
Op = the fractional opacity

A transmissometer may be constructed in two ways, using either a single-pass system or a double-pass system. In a single-pass system, the light crosses the stack directly to a detector. In a double-pass system (Figure 10-1), the light crosses the stack twice.

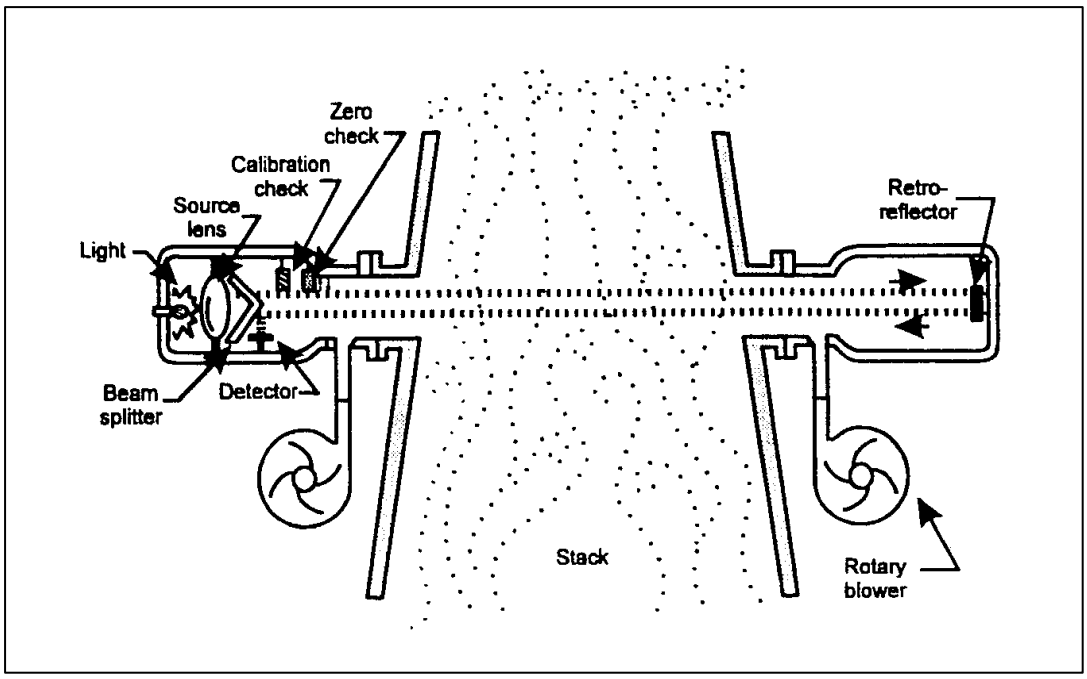

Figure 10-1. A double-pass transmissometer.

In the double-pass system shown in Figure 10-1, the transceiver assembly on the left houses both the light source and light detector. By reflecting the projected light from a mirror on the opposite side of the stack, systems can be easily designed to check all of the electronic circuitry, including the lamp and photodetector, as part of the operating procedure. Most transmissometer systems include some type of air-purging system or blower to keep the optical windows clean.

The way in which a transmissometer is used can affect its design. If the instrument data are intended to be correlated with visible emissions data obtained by applying Method 9, the monitor must meet the EPA design specifications given in Performance Specification 1 of 40 CFR Part 60 Appendix B. This specification requires that the projected light be in the visible region of the electromagnetic spectrum (to compare with observations made by the human eye) and that certain criteria for such things as projection angle, view angle, calibration error, and response time be met. In addition, the monitor must pass a performance test after it is installed in order to determine its drift limits.

If data are to be correlated with particulate mass rate, red or infrared light may be more appropriate. The smaller particles (<5 µm in diameter) contribute greatly to the opacity but not to the particulate mass loading of the flue gas. Red light is not as sensitive to small particles as it is to larger particles, and thus gives a better correlation to particulate mass.

Opacity-mass correlations have been successfully developed for many types of emission sources. However as implied above, correlations may be somewhat sensitive to changes in the particle-size distribution in the flue gas. The conditions for applicability are specified in the ISO 10155 correlation method, which we will discuss later.

OPTICAL – LIGHT SCATTERING

When light is directed toward a particle, the particle may both absorb and scatter the light. If the wavelength of the light is approximately the same as the radius of the particle, a type of scattering, called Mie scattering will occur (originally described by Gustav Mie in 1908). This form of scattering is shown in Figure 10-2.

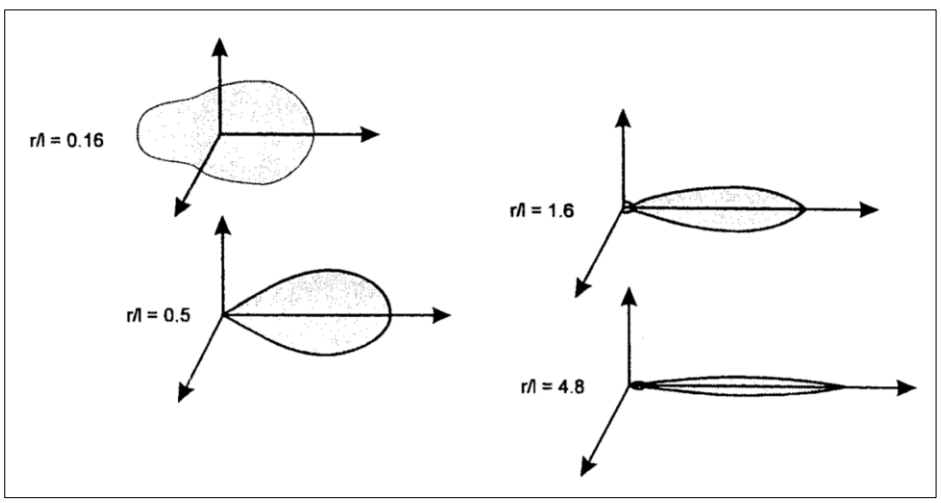

Figure 10-2. Angular dependence of the intensity of light scattered by a spherical particle of index of refraction 1.20. The intensity is arbitrarily normalized in each case.

(Source: Ashley, L.E., 1958)

Note from the figure that for values of r/λ, < 1.0 (where r is the particle radius and λ. the wavelength of the light), the particle will scatter the light in many directions-forward, backwards,

up, down, and so on. For values of r/ λ, >1.0, the scattering will principally be in the forward direction.

Baghouses and electrostatic precipitators used to control the emission of particulate matter will effectively collect particles that are greater than 1 µm (1000 nm) in diameter. It is more difficult, however, to collect particles in the submicron range (<1 µm). These are the particles that will have a higher probability of escaping into the atmosphere. Visible light (range 400 nm to 700 nm) scattering from these particles is, therefore, within the region of applicability of Mie theory for visible and infrared light.

Analyzers have been developed to take advantage of scattering effects. They can be designed to measure either back-scattered light, forward-scattered light, or light scattered at a specified angle. Figure 10-3 illustrates a back-scattering instrument.

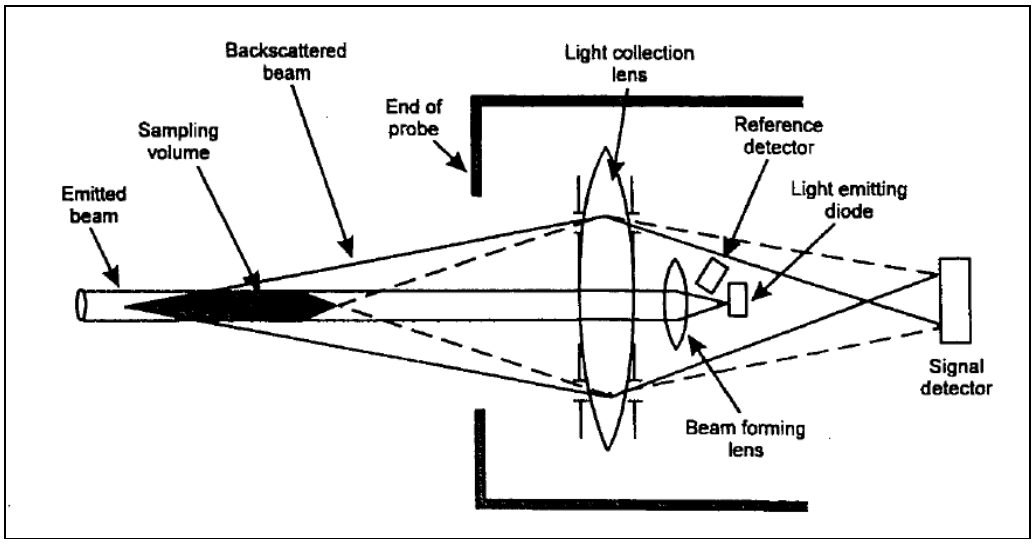

Figure 10-3. A back-scattering continuous mass emission monitor.

In this instrument, the light is focused on a sampling volume where the particulate matter in that volume scatters the light. The back-scattered light is in turn focused on the signal detector. A reference detector is positioned next to the light source to monitor the lamp intensity. Figure 10-4 illustrates a side-scattering instrument.

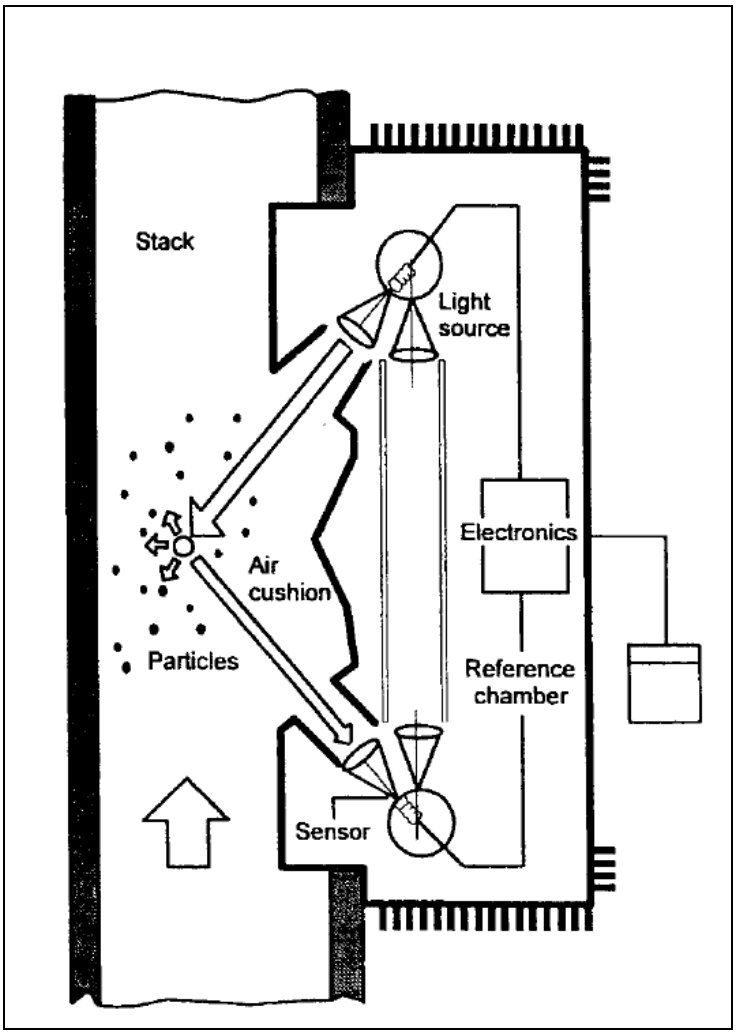

Figure 10-4. A side-scattering continuous mass emission monitor.

In this side-scattering device, infrared light is again focused on a sample volume. Instead of measuring the back-scattered radiation, the device locates a detector beneath the lamp such that side-scattered light is detected. A reference measurement is made by monitoring the lamp intensity through a tube passing from the lamp to the detector.

The response of such instruments tends to be linear with respect to particulate concentration; however, manual particulate measurements are still necessary to correlate the response to mass concentrations. The technique is capable of monitoring emission concentrations as low as 0.4 mg/m^3.

NUCLEAR – BETA RAY ATTENUATION

When beta rays pass through a material, they can be absorbed or reflected by that material. The transmission of the beta rays is therefore attenuated and the reduction in beam intensity can be correlated to the amount of material present. By using a radioisotope for the beta source (e.g., Kr^{85}, C^{14}), beta gauges have been developed that can continuously monitor particulate mass (LBL, 1972) (Figure 10-5).

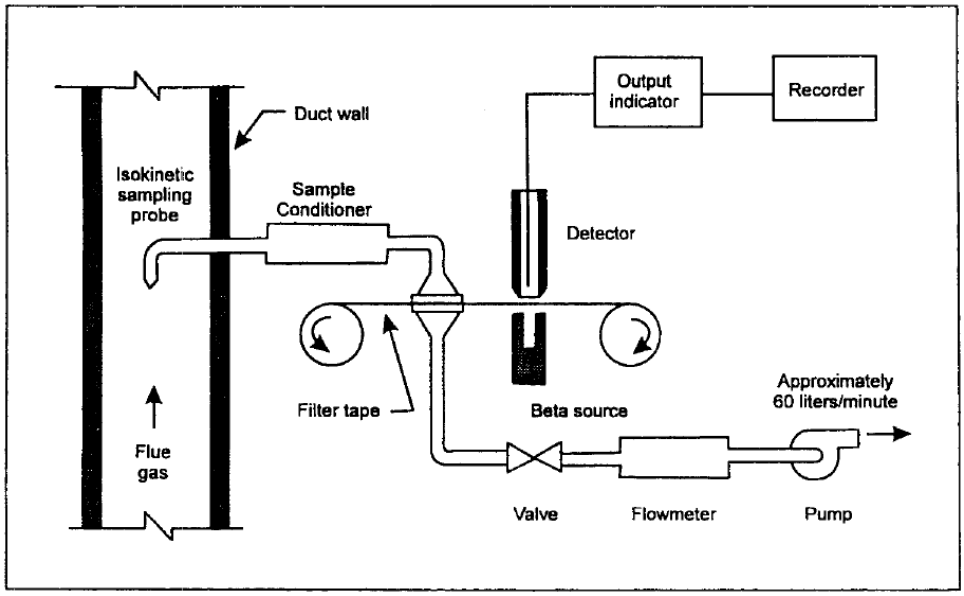

Figure 10-5. A typical beta gauge paper tape monitor.

In this device, the flue gas is first drawn isokinetically through a probe. It is then diluted in order to reduce the dew point to levels where condensation of flue gas moisture will not occur in the instrument. The gas is then filtered through a glass fiber filter to produce a spot of collected particulate matter. This spot is then moved between the beta source and detector for a determination of the beta ray attenuation. In practice, a moving filter tape allows the collection and measurement of one data point every 15- to 30-minute period to produce a semi-continuous measurement.

The reduction of the beta ray beam intensity through the spot depends upon the electron density of the collected material and the amount of material present. To produce consistent measurements, there must be a constant relationship between the number of electrons per molecule and the molecular weight. This ratio is essentially the same for most particulate matter found in coal and oil combustion sources. In principle, the method therefore allows a direct measure of particulate mass without necessarily requiring correlation with Method 5 data. In this method, the sample gas volume is also measured to provide a value for the particulate matter concentration.

The method does however require that the sample be collected isokinetically. Problems may occur with particulate deposition in the sample probe and sampling lines. Spot collection efficiency, particle composition, and gas volumes and dilution ratios are all factors that may produce error. It is therefore still advisable to check or correlate the beta gauge with corresponding Method 5 measurements.

ELECTRICAL – CONTACT CHARGE TRANSFER

When two materials having different work functions make contact, there will be a net transfer of electrons from one material to the other after they are separated. This is not an effect based on the accumulation or transfer of static charges, but an effect based upon the intrinsic electronic properties of the materials themselves. The amount of charge transferred depends on other factors

besides the differences in work function. These include the particle resistivity, dielectric constant, and the physical conditions of contact (e.g., particle deformation, duration of contact, area of contact) (Wang, 1988). Unfortunately, the operating mechanism is being advertised as the "triboelectric effect," a term which is not commonly found in the scientific literature. This has confused evaluation of the technique.

The instrument is simple, consisting of a metal surface probe inserted into the stack. It has been qualitatively successful as a baghouse particulate monitor. The instrument, however, lacks a method of probe calibration and has shown problems in monitoring after electrostatic precipitators.

ELECTROMECHANICAL - PIEZOELECTRICITY, LOADED BEAM

Electromechanical devices have been developed on the principle that the frequency of a vibrating oscillator will change if the mass of the vibrating element changes. A piezoelectric crystal, a cantilevered beam, or oscillating metal band may be used to provide the mechanical vibration. When particulate matter comes into contact with the vibrating element, it adheres to it and changes its total mass, and consequently, its vibration frequency. This mass-dependent vibration frequency is then measured as the correlation parameter.

When applied to flue gas measurements, the sample must be withdrawn isokinetically from the flue and it must be diluted to avoid condensation of the flue gas moisture. When the particles don't adhere to the vibrating element, the data is not representative. When the particles do adhere, the vibrating element will eventually become overloaded and it must be cleaned and recalibrated. In over 15 years of work on this technique, problems of cleaning and recalibration have not been successfully resolved to provide a truly continuous emission electromechanical monitor.

PERFORMANCE STANDARDS FOR CONTINUOUS, PARTICLE MASS MONITORS

Although there are a number of techniques that may be suitable for continuous mass monitoring applications, the technique should meet a set of minimum performance criteria to be accepted for regulatory purposes. Parameters such as response time, zero drift, span, and span drift are commonly specified in any CEM regulation. Table 10-2 lists ISO specifications for continuous mass monitors.

Table 10-6. ISO instrument performance specifications.

Response time	– within the manual reference method sampling time
Zero Drift	– ± 2% of the range/month
Span	– 2-3 times the allowable emission concentration
Span Drift	– ± 2% of the range/month

From the preceding discussion, it may be realized that there is no automated method that can measure mass directly. The beta attenuation technique comes closest to this capability; however, inaccuracies due to changes in particle composition and deficiencies in instrument operation can still occur. Since there is no one best method for continuous mass monitoring, continuous mass monitoring systems should be evaluated and certified by using performance-based standards. Performance-based standards for continuous mass monitoring systems are used in practice today in

Germany (VDI, 1980 and Federal Ministry for the Environment, Nature Conservation, and Nuclear Safety, 1992). A more general set of standards has also been prepared by the International Standards Organization (ISO) (ISO, 1993). The ISO standards are more compatible with the United States procedures for certifying CEM systems and will be used internationally.

As noted in the overview section of this chapter, the EPA released its own performance specification in January of 2004. PS-11 can be found in Appendix B of 40 CFR Part 60. The purpose of PS-11 is to establish the initial installation and performance procedures that are required for evaluating the acceptability of a PM CEMS. PS-11 does not provide an evaluation of the ongoing performance of a PM CEMS over an extended period of time, nor will it identify specific calibration techniques and auxiliary procedures to assess CEMS performance. Procedures for evaluating the ongoing performance of a PM CEMS in Procedure 2 of 40 CFR Part 60 Appendix F, Quality Assurance Requirements for Particulate Matter Continuous Emission Monitoring Systems Used at Stationary Sources.

PS-11 can be used with several different types of PM CEMS technologies (e.g., light scattering, Beta attenuation, etc.) that were described in this chapter. The technologies can be designed with in-situ or extractive sample gas handling systems. Each PM CEMS technology and sample gas handling technology has certain site-specific advantages.

The method also includes performance specifications for 7-day drift check, the accuracy of the correlation, and the sampling periods and cycle/response time as outlined in Table 10-3.

Table 10-7. PS-11 Performance Specifications
7-Day Drift Check – Daily PM CEMS internal drift checks must demonstrate that the average daily drift of the PM CEMS does not deviate from the value of the reference light, optical filter, Beta attenuation signal, or other technology-suitable reference standard by more than 2% of the upscale value.
PM CEMS correlation - The PM CEMS must meet each of the minimum specifications in paragraphs (1), (2), and (3). (1) The correlation coefficient must satisfy the criterion specified in paragraph (i) or (ii), whichever applies. (i) For sources that are not low-emitting, as defined in section 3.16 of PS-11, the correlation coefficient (r) must be greater than or equal to 0.85. (ii) For sources that are low-emitting, as defined in section 3.16 of PS-11, the correlation coefficient (r) must be greater than or equal to 0.75. (2) The confidence interval half range must satisfy the applicable criterion specified in paragraph (i), (ii), or (iii), based on the type of correlation model. (i) For linear or logarithmic correlations, the 95 percent confidence interval half range at the mean PM CEMS response value from the correlation test must be within 10 percent of the PM emission limit value specified in the applicable regulation. Therefore, the CI% calculated using Equation 11–10 of PS-11 must be less than or equal to 10 percent.

(ii) For polynomial correlations, the 95 percent confidence interval half range at the PM CEMS response value from the correlation test that corresponds to the minimum value for Δ must be within 10 percent of the PM emission limit value specified in the applicable regulation. Therefore, the CI% calculated using Equation 11–28 of PS-11 must be less than or equal to 10 percent.

(iii) For exponential or power correlations, the 95 percent confidence interval half range at the mean of the logarithm of the PM CEMS response values from the correlation test must be within 10 percent of the PM emission limit value specified in the applicable regulation. Therefore, the CI% calculated using Equation 11–10 must be less than or equal to 10 percent.

(3) The tolerance interval half range must satisfy the applicable criterion specified in paragraph (i), (ii), or (iii), based on the type of correlation model.

(i) For linear or logarithmic correlations, the half range tolerance interval with 95 percent confidence and 75 percent coverage at the mean PM CEMS response value from the correlation test must be within 25 percent of the PM emission limit value specified in the applicable regulation. Therefore, the TI% calculated using Equation 11–13 of PS-11 must be less than or equal to 25 percent.

(ii) For polynomial correlations, the half range tolerance interval with 95 percent confidence and 75 percent coverage at the PM CEMS response value from the correlation test that corresponds to the minimum value for Δ must be within 25 percent of the PM emission limit value specified in the applicable regulation. Therefore, the TI% calculated using Equation 11–32 of PS-11 must be less than or equal to 25 percent.

(iii) For exponential or power correlations, the half range tolerance interval with 95 percent confidence and 75 percent coverage at the mean of the logarithm of the PM CEMS response values from the correlation test must be within 25 percent of the PM emission limit value specified in the applicable regulation. Therefore, the TI% calculated using Equation 11–13 of PS -11 must be less than or equal to 25 percent.

Sampling Periods and Cycle/Response Time –

(1) Batch sampling PM CEMS, evaluate the limits presented in paragraphs (i) and (ii).

(i) The response time of the PM CEMS, which is equivalent to the cycle time, must be no longer than 15 minutes. In addition, the delay between the end of the sampling time and reporting of the sample analysis must be no greater than 3 minutes.

(ii) The sampling time of the PM CEMS must be no less than 30 percent of the cycle time. If you have a batch sampling PM CEMS, sampling must be continuous except during pauses when the collected pollutant on the capture media is being analyzed and the next capture medium starts collecting a new sample.

ISO STANDARD - ISO 10155 - TEST METHODS

The ISO 10155 method ("Automated Monitoring of Mass Concentration of Particles in Stationary Source Emissions: Performance Characteristics, Test Procedures, and Specifications") includes both performance characteristics and test procedures for certifying continuous mass monitoring systems. Essentially, the method requires that a correlation be made between a manual particulate sampling method such as Method 5 or Method 17 and a parameter measured by the instrument. The method defines how a statistical correlation is to be made and defines the acceptance criteria for confidence and tolerance intervals.

Developing a correlation depends on three principal activities:

- Varying source particulate emissions.
- Automated monitoring.
- Manual source testing.

For the first activity, emission levels can be varied in a number of ways. The following techniques can be used:

- Load levels or charging rates can be changed.
- Excess air levels can be adjusted.
- ESP fields or baghouse section can be shut off or bypassed.
- Wet scrubber pressure drop can be adjusted.
- Process failures or other control equipment failures can be simulated.
- Fuel types can be changed.

The purpose of developing the correlation should be kept in mind when planning a program for varying emissions. Particulate concentrations should not be changed just to obtain points on a graph. Instead, each change should represent a possible operating condition or control condition that would lead to higher (or lower) emission levels. Ideally, the range of variables that contribute to the regulated emissions should be incorporated in the testing program.

Changing fuels, bypassing control systems, or simulating equipment failures may all change the size distribution of the emitted particles. The resulting instrument data may or may not be well-correlated to the manual test data, depending on the extent of the changes in the measured parameters of the particles.

The ISO 10155 method specifies that a minimum of three levels of particulate mass concentration be determined and that these measurements be repeated three times to provide a total of at least nine measurements. In order to obtain varying conditions, it is recommended that process load conditions be varied.

The correlation procedure requires concurrent manual extraction of a particulate sample from the exhaust gas stream. The important point to remember in this testing procedure is that a comparison is being established between the particulate concentration and the instrument measurement parameter at a given time and under a given set of conditions. The instrument may measure an in-situ sample, or an extracted, diluted sample. Method 5 measures particulate concentration on a dry basis, and Method 17 measures on a wet basis. The in-stack filter of Method 17 will give a measurement characteristic of stack conditions, but a Method 5 out-of stack filter may only approximate these conditions. An out-of-stack filter should be maintained at the stack temperature. If this is not possible, the concentration data should be corrected back to stack conditions on a wet

basis. However, if materials are present that condense at the filter temperature but not the stack temperature, difficulties may occur in developing the correlation.

Another problem that may occur is in comparing the instrument readings with concentrations determined by manual sampling at Method 1 traverse points. An extractive beta gauge measures at one point only. A transmissometer obtains a line-averaged measurement on one diameter only, and back-scattering instruments measure only a small sampling volume. The degree of correlation between the instrument method and the manual method may be reduced if the particulate matter is non-uniformly distributed over the stack cross-section. Also, the correlation may be obtained under a set of temperature, pressure, and moisture conditions, but the instrument system may be measuring under other sets of conditions in the future. In such cases, the actual conditions of measurement should be provided with the correlation so that the future results are not incorrectly interpreted or incorrectly compared to other studies.

The principal concern in obtaining a valid instrument-manual method correlation is to make sure that the procedures are conducted in *a representative* manner.

- The source and control equipment should be operated under a representative set of conditions when obtaining the varying mass concentrations.
- The automated system should measure a sample that is representative of emissions to the atmosphere.
- The manual sampling method should extract a sample representative of that measured by the instrument system.
- Measurements should be representative in time. Instrumented and manual measurements should be concurrent. Source operating conditions should remain stable during these measurement periods.

STATISTICAL ANALYSIS PROCEDURES

The monitoring method chosen (e.g., transmissometer, beta gauge, etc.) is acceptable for continuous monitoring if the correlation with manual source testing measurements meets specified statistical criteria. The 1993 International Standards Organization criteria are given in Table 10-5.

Table 10-8. Correlation specifications for continuous mass monitoring.

Correlation Coefficient	Z 0.95
Zero Drift	± 10% of particulate emission standard
Span	95% confidence that 75% of values are within ± 25% of emission standard

If any of these specifications cannot be met, the sampling strategy should be re-examined. If no problems have occurred in the manual sampling, another method of instrumental measurement may have to be selected.

In the ISO statistical correlation method, either a linear or nonlinear calibration curve is established between the instrument measurements and reference method measurements. When developing the correlation, the following procedures are to be followed.

- Initially set up the instrument. Zero and calibrate the instrument.
- Operate the instrument for an initial 168-hour period in its normal mode, prior to conducting the manual reference method testing.
- Check the instrument zero and span drift according to the manufacturer's instructions. Determine the drift over a period of seven days to see if it meets the specifications given in Table 10-2.
- Develop the correlation curve.

  a. Perform measurements within normal process operation at three levels of particulate mass concentration. The levels should range from low, intermediate, and high emission values.

  b. Repeat the measurements at the three concentration levels to provide a total of at least nine measurements.

  c. If low, intermediate, and high emission values cannot be attained within normal process operation, vary emissions by adjusting the particulate emission control system (e.g., baghouse, electrostatic precipitator, etc.).

  d. Integrate the instrumental monitoring system data over the periods of manual testing.

  e. Perform the statistical calculations as defined in the method given below to determine if the monitoring system meets the specifications of Table 10-3.

In the ISO method, a least squares approach is used to develop the graphical correlation. Figure 10-6 illustrates a typical correlation developed for a transmissometer system.

The instrument reading is plotted on the abscissa and the mass concentration is plotted on the ordinate of the graph. A line of regression is drawn through the plotted points by the method of least squares. In these calculations, y is the predicted value of the mass concentration based on the calibration curve, in contrast to the empirical value, y, based on the manual reference method.

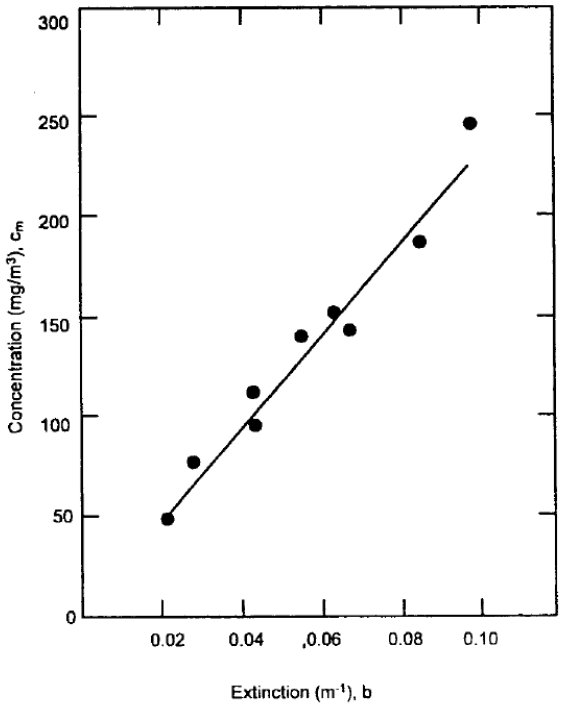

Figure 10-6. Manual reference: extinction correlation for a transmissometer continuous particulate mass monitoring system.

After a regression line such as that shown in Figure 10-6 is produced, it can be used to obtain a particulate mass concentration value from a measured instrument parameter. In this example, the parameter, b, is the flue gas value of the "extinction," obtained from the transmissometer measured optical density.

Since predictions for concentration are essentially being made from the fitted line, we would like to obtain some estimate of how good the predictions will be. This is obtained from the confidence and tolerance interval calculations. Figure 10-7 illustrates how the confidence intervals can be used.

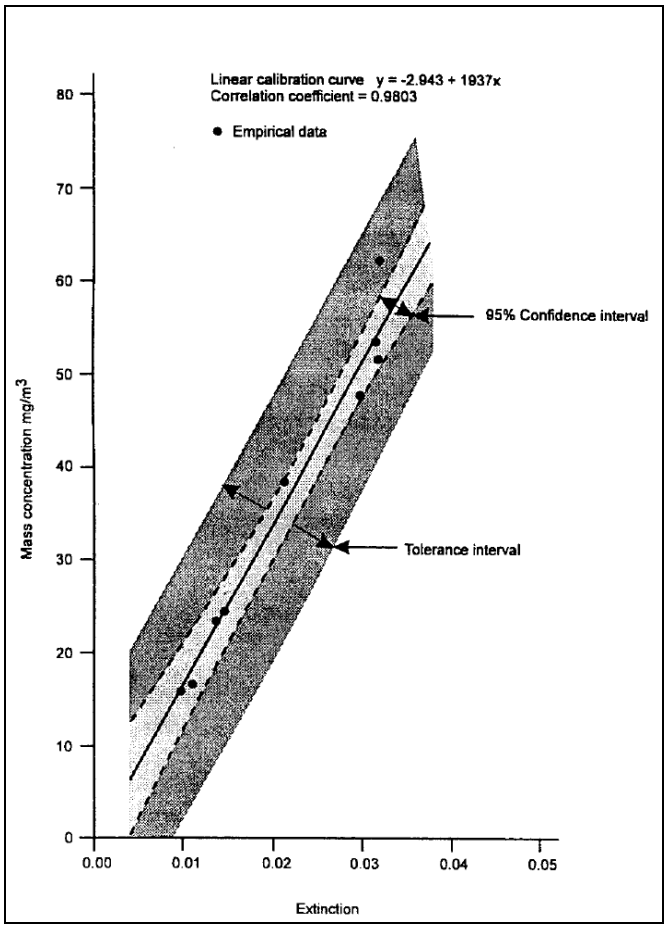

Figure 10-7. Confidence intervals and the concentration-extinction plot.

The combination of the correlation coefficient, r, and the confidence intervals can give an estimate of how well the correlation technique works in a specific application. All reported data should include a graphical representation of the regression line, the 95% confidence intervals, the tolerance intervals, and the value of the correlation coefficient, r.

Note that the correlation is developed under *actual* stack conditions. If, for regulatory reasons, it is desired to report the concentration value at standard conditions, the gas law corrections should be performed after the concentration values are obtained from the graph.

APPLICATION

The approach presented here emphasizes the correlation to representative field data. Source operating conditions should be representative of normal and/or malfunction conditions, instrument measurements should be taken at a representative location, and mass concentration measurements should be made so as to be representative of the emissions sensed by the instrument.

The correlation coefficient gives an estimate of how well the concentration data correlates with the measured instrument parameter and the confidence intervals give estimates of error associated with values obtained from the graph. It should be sufficient in a regulation to state that the method is

acceptable if r is equal to a chosen value, such as 0.75 or 0.90. The value of r will be essentially a regulatory decision, since the lower the value, the greater the imprecision in the values determined from the graph. If r is smaller, the confidence intervals will be larger. This has to be taken into account if the information is intended for source compliance determinations.

The correlation technique described above is valid only so long as the conditions under which a correlation was developed are representative of the source operation. Changes in operation that lead to significant changes in particle characteristics or the particle size distribution may greatly affect the slope of the correlation line. Changes in fuel, changes in control equipment, or changes in process operation may contribute to this problem. A new correlation should be developed in such situations and such guidance should be provided in the regulatory specifications. Quality assurance performance audits that check single points on a routine basis can also alleviate this problem.

10.3 SUMMARY

CONTINUOUS PARTICLE EMISSION MONITORING

This chapter covered the following topics:

- Requirements for continuous monitoring of particulates.
- Appropriate measurement techniques for monitoring particulates.
- Instruments and performance standards for monitoring particulates.
- ISO 10155 test methods used in continuous mass emissions monitoring.
- Procedures for performing statistical analysis.

BIBLIOGRAPHY

Ashley, L.E., and C.M. Cobb. 1958. Single particle scattering functions for latex spheres in water. Journal of the Optical Society of America 18:261-268.

Federal Ministry for the Environment, Nature Conservation, and Nuclear Safety. 1992. Air Pollution Control Manual of Control Emission Monitoring: Federal Republic of Germany. Berlin.

International Standards Organization (ISO). 1993. Automated Monitoring of Mass Concentration of Particles in Stationary Source Emissions: Performance Characteristics, Test Procedures and Specifications. ISO 10155.

Jahnke, J.A. 1984. Transmissometer Systems: Operation and Maintenance. (APTI Course 476A). EPA 450-84-004. U.S. Environmental Protection Agency.

Jahnke, J.A. 1993. Continuous Emission Monitoring. New York: Van Nostrand Reinhold.

Lawrence Berkeley Laboratory (LBL). 1972. Instrumentation for Environmental Monitoring. Vol 1. LBL-1. University of California, Berkeley.

Nader, J.S. 1975. Current technology for continuous monitoring of particulate emissions.

Journal of the Air Pollution Control Association 25(8):814-821.

Verein Deutscher Ingenieure (VDI). 1980. Staubmessung in Stromenden Gasen Bestimmung der Staubbeladung durch Kontinuierliches Messen der Optischen Transmission. Band 4, VDIHandbook Reinhaltung der Luft. VDI 2066. Dusseldorf, Germany.

Wang, H., and W. John. 1988. Dynamic contact charge transfer considering plastic deformation. Journal of Aerosol Science 19(4):399-411.

Willeke, K. and P.A. Baron. 1993. Aerosol Measurement: Principles, Techniques and Applications. New York: Van Nostrand Reinhold

APPENDICES

APPENDIX A: EQUATION DERIVATIONS

A.1 DERIVATION OF THE EQUATION FOR MOLECULAR WEIGHT OF STACK GAS

INTRODUCTION

- Calculations involved in source sampling require knowledge of the molecular weight of a stack gas.
- Stack gas is almost always a mixture of gases.
- The apparent molecular weight of the gas mixture is a function of the composition of the mixture.
- Stack gas containing significant quantities of gaseous effluents other than oxygen, nitrogen, carbon dioxide, and water vapor should be analyzed chemically for composition and apparent molecular weight determined from this data.

CALCULATION OF APPARENT MOLECULAR WEIGHT OF GAS MIXTURE

This derivation assumes the major components of the gases from a hydrocarbon combustion source to be oxygen, nitrogen, carbon dioxide, water vapor, and carbon monoxide.

THE IDEAL GAS LAWS

1. Boyle's law states that at constant temperature the volume of a given mass of a perfect gas of a given composition varies inversely with the absolute pressure.

2. Charles' law states that at constant volume the absolute pressure of a given mass of a perfect gas of a given composition varies directly as the absolute temperature.

3. Combining these relationships into an equation, it may be stated.

$$PV = \frac{mRT}{M} \qquad \text{(Eq. A-1)}$$

Where: P = absolute pressure
T = absolute temperature
V = volume of gas
M = molecular weight of the gas (mass/mole)
m = mass of the gas

4. Equation A-1 satisfies Dalton's law of partial pressures when

$$P_x V_{mix} = \frac{m_x R T_{mix}}{M_x} \qquad \text{(Eq.A-2)}$$

Where: P_x = partial pressure of a gas component in a mixture of nonreacting gases
V_{mix} = volume of the gas mixture
m_x = mass of a gas component
R= universal gas constant (in appropriate units)
T_{mix} = absolute temperature of the gas mixture
M_x= molecular weight (mass/mole) of a gas component

Note that $\frac{P_x V_{mix}}{T_{mix}}$ is constant only if $\frac{m_x}{M_x}$ remains constant.

Proportion by volume of a component in a gas mixture

1. Equation A-3 states that for a gas mixture

$$P_{mix} V_{mix} = \frac{m_{mix} R T_{mix}}{M_{mix}} \qquad \text{(Eq. A-3)}$$

2. Applying this relationship in Eq. A-2 and removing the common term

$$\frac{RT_{mix}}{V_{mix}}$$

it may be seen that the partial pressure of a given gas component is directly related to the mole fraction of that component in the gas mixture

$$\frac{P_x}{P_{mix}} = \frac{\frac{m_x}{M_x}}{\frac{m_{mix}}{M_{mix}}} \qquad \text{(Eq. A-4)}$$

3. At constant temperature and pressure equation A-1 may be written

$$\frac{m}{M} = \frac{PV}{RT} \qquad \text{(Eq. A-5)}$$

4. Rearranging Eq. A-2 and Eq. A-3 as Eq. A-5 and substituting in Eq. A-4

$$\frac{P_x}{P_{mix}} = \frac{V_x}{V_{mix}} \qquad \text{(Eq. A-6)}$$

5. Letting the proportion by volume (B_x) equal $\frac{V_x}{V_{mix}}$, Eq. A-6 may now be expressed

$$B_x = \frac{P_x}{P_{mix}} \qquad \text{(Eq. A-7)}$$

6. Equation A-7 gives the proportion by volume of a gas component as a function of partial pressure, which (from Dalton's law) is directly related to the mole fraction.

   The apparent molecular weight of a gas mixture may now be derived using the relationship of partial pressure to the mole fraction.

1. Rewriting Equation A-2

$$M_x P_x V_{mix} = m_x R T_{mix} \qquad \text{(Eq. A-8)}$$

2. Dalton's law tells us that Eq. A-8 is actually

$$V_{mix} \Sigma P_x M_x = R T_{mix} \Sigma m_x \qquad \text{(Eq. A-9)}$$

3. $\Sigma m_x = m_{mix}$ and from Eq. A-5

$$m_{mix} = \frac{P_{mix} V_{mix} M_{mix}}{R T_{mix}} \qquad \text{(Eq. A-10)}$$

4. Substituting for Σm_x and solving for M_{mix} in Eq. A-10, we obtain

$$M_{mix} = \frac{\Sigma P_x M_x}{P_{mix}} \qquad \text{(Eq. A-11)}$$

5. Since $\frac{P_x}{P_{mix}} = B_x$, Eq. A-11 can be

$$M_{mix} = \Sigma B_x M_x \qquad \text{(Eq. A-12)}$$

A.2 Stack Gas Analysis Using Orsat Analyzer

1. The Orsat apparatus operates at constant proportion by volume of water vapor.

2. The Orsat method yields volume data on a dry basis (volume related to mole fraction and partial pressure).

3. The apparent molecular weight must include the water vapor component of the stack gas.

4. The stack gas moisture content may be obtained as described in the moisture content section.

5. The actual apparent molecular weight may be calculated by:

$$M_{mix} = \Sigma B_x M_x (1 - B_{ws}) + B_{ws} M_{H_2O}$$

$\Sigma B_x M_x$ = sum of dry mole fractions
B_{ws} = proportion by volume of H_2O in stack gas
M_{H_2O} = molecular weight of H_2O

A.3 Derivation of Concentric Equal Areas of a Circular Duct

Traverse points are located at the centroid of an equal area in a circular duct.

A traverse point is thus a distance from the center of the duct (a radius of a concentric equal area).

The distance or radius (r'_j) for a traverse point (j) for any circular duct having (N) equal areas may be determined in the following manner:

We know that πr^2 = area of a circle.

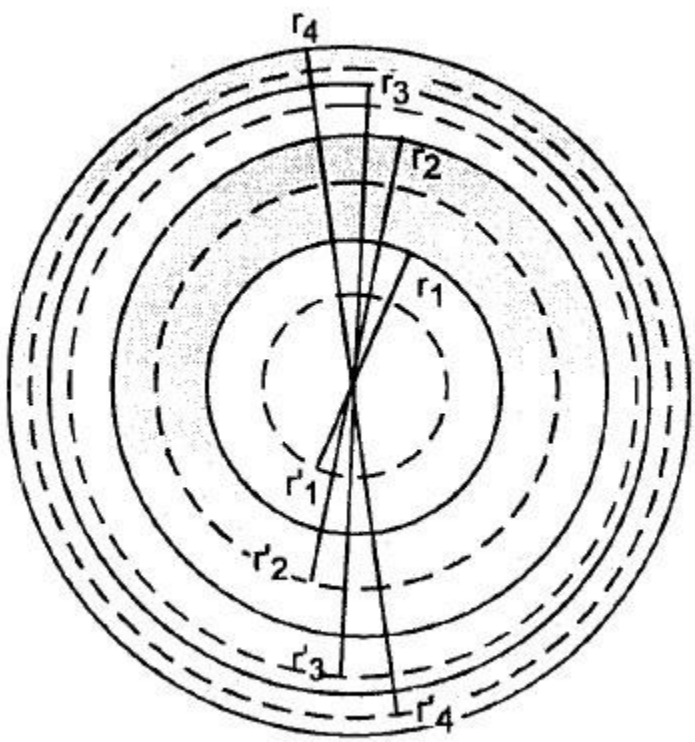

Figure A-8. Traverse points for a circular duct with four equal areas.

From Figure A-1 we see:

$$\pi r_2^2 - \pi r_1^2 = \pi r_1^2 \qquad \text{(Eq. A-14)}$$

which simplifies to:

$$r_1^2 = \frac{r_2^2}{2} \qquad \text{(Eq. A-15)}$$

Dividing these again into equal areas

$$r_2^2 - r_1^2 = r_2^2 - r'^2_2 \qquad \text{(Eq. A-16)}$$

$$r'^2_3 - r_2^2 = r_3^2 - r'^2_3 \qquad \text{(Eq. A-17)}$$

Solving Eq. A-16 and A-17 and expressing in generalized form, the locus of points r'_j separating any area (j) into two equal areas is:

$$r'^2_j = \frac{r_j^2 + (r_{j-1})^2}{2} \qquad \text{(Eq. A-18)}$$

Dividing the duct of radius R into N equal areas we find:

$$\frac{\pi R^2}{N} = \pi (r_j^2 - (r_{j-1})^2)$$

$$(r_{j-1})^2 = r_j^2 - \frac{R^2}{N} \qquad \text{(Eq. A-19)}$$

Substituting for $(r_{j-1})^2$ in Eq. A-19

$$r'^2_j = \frac{r_j^2 + r_j^2 - \frac{R^2}{N}}{2}$$

$$= \frac{2r_j^2 - \frac{R^2}{N}}{2}$$

$$= \frac{2Nr_j^2 - R^2}{2N}$$

Then, solving for r'_j:

$$r'^2_j = \frac{R^2\left(\frac{2Nr_j^2}{R^2} - 1\right)}{2N} \qquad \text{(Eq. A-20)}$$

$$r'_j = R\sqrt{\frac{2N\left(r_j^2/R^2\right)-1}{2N}}$$

The duct was divided into N equal areas each defined by a radius, r_1, r_2, r_3, r_4,...r_j. r'_j is the locus of points dividing each area into two equal areas. From Figure A-1, N = 4 and:

$$\frac{r_1^2}{R^2} = 1/4$$

$$\frac{r_2^2}{R^2} = 2/4$$

$$\frac{r_3^2}{R^2} = 3/4$$

$$\frac{r_4^2}{R^2} = 4/4$$

generalizing:

$$\frac{r_j^2}{R^2} = \frac{j}{N} \qquad \text{(Eq. A-21)}$$

Substituting Eq. A-21 into Eq. A-20 and simplifying:

$$r'_j = R\sqrt{\frac{2N\frac{j}{N}-1}{2N}} \qquad \text{(Eq. A-22)}$$

$$= R\sqrt{\frac{2j-1}{2N}}$$

Where: j= any locus of points dividing an equal area into two equal areas
(i.e., traverse point at the centroid of an equal area)
N= number of equal areas

The percent of the duct diameter (P) (the distance from the inside wall of the duct to a traverse point) is obtained for r'_j by the following method.

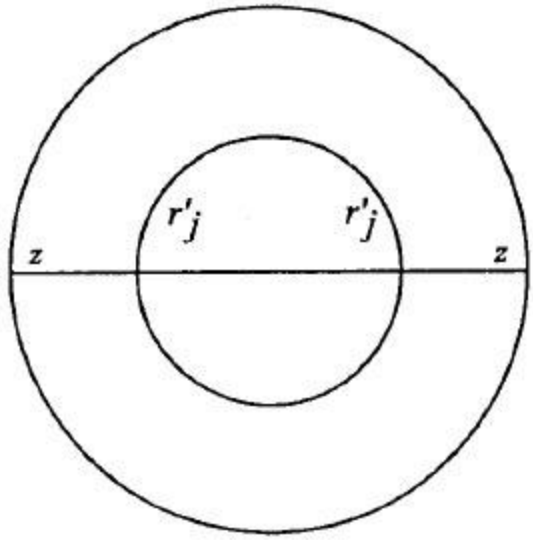

Figure A-9. Radius r'_j for a circular duct.

a. From Figure A-2:

$$2r'_j + 2z = \text{Diameter } D$$

$$z = \frac{D - 2r'_j}{2}$$

b. Percent of diameter $(P) = \frac{Z}{D} \times 100$

Substituting from Eq. A-22 and simplifying

$$P = \frac{(D - 2r'_j)\,100}{2} \div D$$

$$= \frac{50(D - 2r'_j)}{D}$$

$$P = \frac{50\left(D - 2R\sqrt{\frac{2_j - 1}{2N}}\right)}{D} \qquad \text{(Eq. A-23)}$$

Where: P= percent of diameter from inside wall to radius r'_j
N= total number of equal areas
j= specific area for which the location of points is calculated
(i.e., 1, 2, 3, 4...from the center of duct outward)

A.4 Derivation of the Equivalent Diameter Equation for a Duct of Any Shape

The equivalent diameter (E_D) for a duct is also defined as the hydraulic duct diameter (H_D). The hydraulic radius (R_H) for a duct transporting fluids is defined as the cross-sectional area of that part of the channel that is filled with fluid divided by the length of the wetted perimeter.

A stack gas will completely fill a duct and the entire duct perimeter will be wetted. Considering this situation for a circular duct we find:

$$R_H = \frac{\pi\left(\frac{d}{2}\right)^2}{\pi d} = \frac{\frac{d^2}{4}}{d} = \frac{d}{4} \qquad \text{(Eq. A-24)}$$

This illustrates that the hydraulic radius of a circular duct is one-fourth the duct diameter. The equivalent or hydraulic diameter for a noncircular pipe is four times the hydraulic radius:

$$4R_H = H_D = E_D \qquad \text{(Eq. A-25)}$$

The equivalent diameter for the rectangular duct illustrated would be:

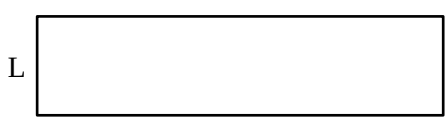

$$4R_H = 4\frac{L \times W}{2L + 2W} = 2\frac{L \times W}{L + W} = E_D \qquad \text{(Eq. A-26)}$$

which is the equation given in Method 1. This equation can be used for determining the equivalent diameter of any duct. Method 1 guidelines can then be applied.

A.5 DERIVATION OF THE PITOT TUBE EQUATION

The pitot tube (standard or Type S) is used to measure the velocity of a gas. The pitot is actually a pressure-sensing device that allows the determination of the gas stream velocity based upon the total system energy. Figure A-3 illustrates the fluid flow around a standard pitot tube submerged in a gas stream.

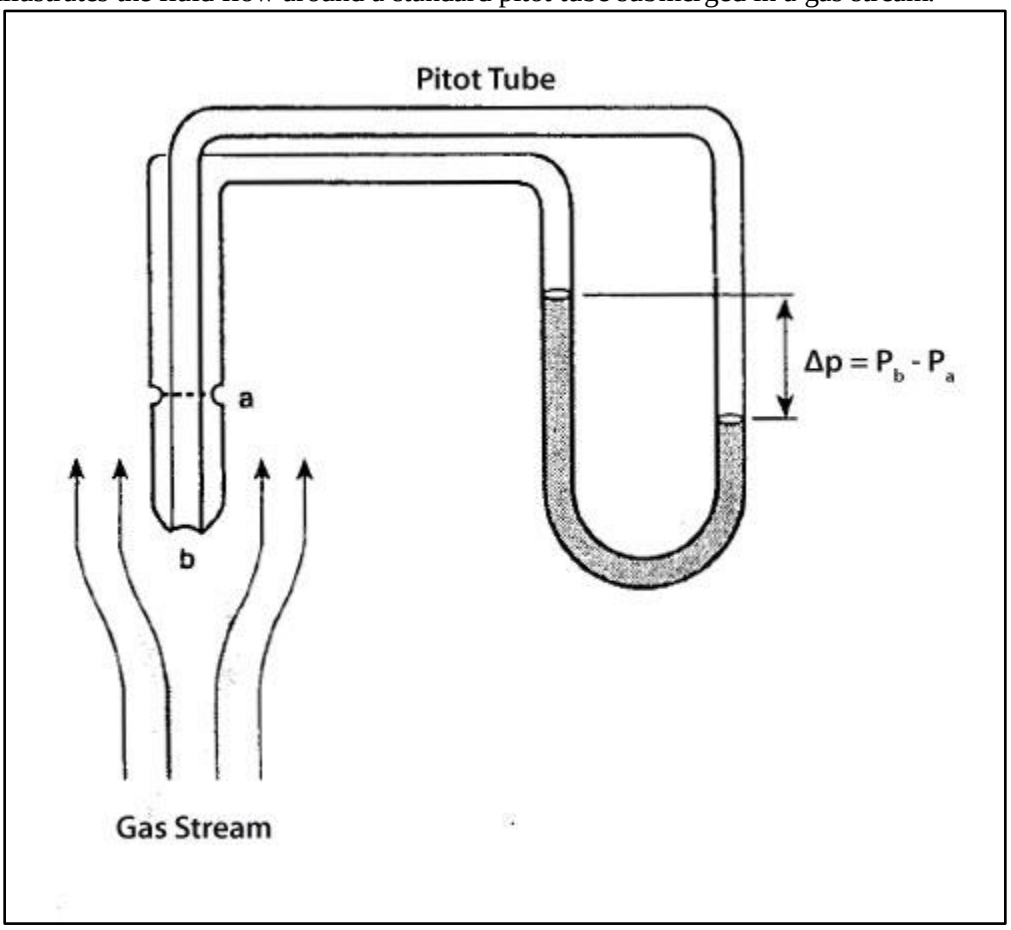

Figure A-10. Fluid flow around a standard pitot tube.

Applying Bernoulli's equation to points "a" and "b" we may describe the system:

$$P_b + \frac{1}{2}\rho v_s^2 + \rho g y_1 = P_a + \frac{1}{2}\rho v_s^2 + \rho g y_2 \qquad \text{(Eq. A-27)}$$

Where: P_b = full ram gas pressure at point b
P_a = free-stream gas pressure at point a - a static pressure
ρ= gas density
g= acceleration of gravity
y= some elevation above a reference level, which in this case is negligible, therefore,
$y_1 \cong y_2 \cong 0$
v_s= stack gas velocity

Since $y_1 \cong y_2 \cong 0$ Eq. A-27 may be written:

$$P_b + \frac{1}{2}\rho v_s^2 = P_a + \frac{1}{2}\rho v_s^2 \qquad \text{(Eq. A-28)}$$

At point b, the gas molecules stagnate, giving up their kinetic energy. The gas velocity at b is zero (v_s= 0) and Eq. A-28 becomes:

$$P_b = P_a + \frac{1}{2}\rho v_s^2 \qquad \text{(Eq. A-29)}$$

The kinetic energy of the gas molecules at b has been used to perform work on the manometer fluid changing the height of the column (Δp). The knowledge that the total energy in the system is conserved allows this derivation to proceed based on a description of pressure terms in the system. The pressures in the system are balanced when:

$$P_b = P_a + \rho' g(\Delta p) \qquad \text{(Eq. A-30)}$$

Where: ρ'= density of the manometer fluid
Δp= change in height of the manometer column

The full ram pressure is equal to the sum of the system static pressure and the pressure of the manometer column. Rearranging terms in Eq. A-29 and Eq. A-30 we see:

$$\frac{1}{2}\rho v_s^2 = \rho' g(\Delta p) \qquad \text{(Eq. A-31)}$$

And

$$v_s = \sqrt{\frac{2\rho' g(\Delta p)}{\rho}} \qquad \text{(Eq. A-32)}$$

which describes the calculation of the gas velocity of an ideal gas in a system free of frictional energy losses. The gas density may be described for a given gas of unknown density by using the ideal gas law. The gas density is defined:

$$\rho = \frac{\text{mass}}{\text{volume}} \qquad \text{(Eq. A-33)}$$

We know from the ideal gas law that:

$$P_s V = \frac{m}{M_s} R T_s \qquad \text{(Eq. A-34)}$$

Where: P_s= absolute pressure
V= volume
m= mass of the gas
M_s= molecular weight of the gas
R= universal gas constant (in appropriate units)
T_s = absolute gas temperature

Rearranging terms in Eq. A-34, we obtain:

$$\frac{m}{V} = \frac{M_s P_s}{RT_s}$$

Then substituting this into Eq. A-33 and Eq. A-32, we obtain:

$$v_s = \sqrt{\frac{2\rho' g\,\Delta p\,RT_s}{P_s M_s}} \qquad \text{(Eq. A-35)}$$

By using the following values in Eq. A-35, we can calculate a constant (K_p):

$$\rho'_{H_2O} = 62.428\ \text{lb/ft}^3$$

$$g = 32.174\ \text{ft/sec}^2$$

$$R = 21.83 \frac{\text{in. Hg} - \text{ft}^3}{\text{lb mole} - °\text{R}}$$

$$12\ \text{in. } H_2O = 1\ \text{ft}$$

$$K_p = \sqrt{\frac{2\,(62.428)\,(32.174)\,(21.83)}{12}}$$

$$= 85.486\ \text{ft/sec}\sqrt{\frac{(\text{lb/lb mole})\ (\text{in. Hg})}{°\text{R} - \text{in. } H_2O}}$$

$$v_s = K\sqrt{\frac{T_s\,\Delta p}{P_s M_s}} \qquad \text{(Eq. A-36)}$$

The final term in our equation must account for the effect of friction and the resultant turbulence in our system. A properly constructed standard pitot tube will not be measurably influenced by frictional effects. It may be assigned a coefficient of friction 0 $C_{p(std)}$ of units. Any other pitot tube would have to be corrected for the effects of turbulence about the tube. If we include $C_{p(std)}$ in our velocity equation we have:

$$v_s = K_p C_{p_{(std)}} \sqrt{\frac{T_s\,\Delta p}{P_s M_s}} \qquad \text{(A-37)}$$

The gas velocity calculated using a standard pitot tube with $C_{p(std)}$ will be equal to the velocity measured with a Type S pitot tube if we know the $C_{p(s)}$ for the Type S pitot. This may be written:

$$K_p C_{p_{(std)}} \sqrt{\frac{\Delta p_{std} T_s}{P_s M_s}} = K_p C_{p_{(s)}} \sqrt{\frac{\Delta p_s T_s}{P_s M_s}}$$

Solving for $C_{p(s)}$ we get an expression that allows us to compare the Type S pitot tube to a standard pitot tube with a known coefficient of friction:

$$C_{p_{(s)}} = C_{p_{(std)}} \sqrt{\frac{\Delta p_{std}}{\Delta p_s}} \qquad \text{(A-38)}$$

We may now use any pitot tube to measure gas velocity once we know its $C_{p(s)}$.

A.6 Derivation of Isokinetic Rate Equation

Introduction

The orifice meter setting ΔH actually correlates many factors to produce a gas velocity at the sampling nozzle equal to the velocity of the approaching gas stream.

Developing the derivation will depend on the following relationships:

- Velocity of the stack (v_s) equals the velocity of the gas entering the nozzle (v_n) at isokinetic conditions. From the pitot tube equation:

$$v_s = K_p C_p \sqrt{\frac{T_s \Delta p}{P_s M_s}} \qquad \text{(A-39)}$$

- The volumetric flow rate at the nozzle tip (Q_n) equals the nozzle cross-sectional area (A_n) times the gas velocity at the nozzle (v_n):

$$Q_n = A_n v_n = A_n v_s \qquad \text{(A-40)}$$

- The volumetric flow rate at the meter Q_m is related to Q_n by the ideal gas law. Assuming that the mass flow rate does not change:

$$Q_n = A_n v_s = Q_m \frac{P_m}{P_s} \frac{T_s}{T_m} \qquad \text{(A-41)}$$

- Correcting the mass flow rate at the meter for the condensation of water vapor:

$$Q_n = Q_m \frac{P_m}{P_s}\frac{T_s}{T_m}\left(\frac{1-B_{wm}}{1-B_{ws}}\right) \qquad \text{(A-42)}$$

- The flow rate at the meter is given as:

$$Q_m = K_m\sqrt{\frac{T_m \Delta H}{P_m M_m}} \qquad \text{(A-43)}$$

DERIVATION

Equations will be solved to give ΔH (the pressure differential across the orifice meter) for a given Δp in the stack.

From Eq. A-42

$$Q_n = Q_m\left(\frac{P_m}{P_s}\frac{T_s}{T_m}\right)\left(\frac{1-B_{wm}}{1-B_{ws}}\right) \qquad \text{(A-44)}$$

Substituting for Q_m from Eq. A-39

$$Q_n = K_m\sqrt{\frac{T_m\,\Delta H}{P_m M_m}}\left(\frac{P_m}{P_s}\frac{T_s}{T_m}\right)\left(\frac{1-B_{wm}}{1-B_{ws}}\right) \qquad \text{(A-45)}$$

Replacing $A_n v_s$ for Q_n from Eq. A-40:

$$A_n v_s = K_m\sqrt{\frac{T_m\,\Delta H}{P_m M_m}}\left(\frac{P_m}{P_s}\frac{T_s}{T_m}\right)\left(\frac{1-B_{wm}}{1-B_{ws}}\right) \qquad \text{(A-46)}$$

Substituting $A_n = \frac{\pi D_n^2}{4}$ and $v_s = K_p C_p\sqrt{\frac{T_s\,\Delta p}{P_s M_s}}$ and squaring both sides:

$$\left(\frac{\pi D_n^2}{4}\right)^2 K_p^2 C_p^2\left(\frac{T_s\,\Delta p}{P_s M_s}\right) = K_m^2\left(\frac{T_m\,\Delta H}{P_m M_m}\right)\left(\frac{P_m^2}{P_s^2}\frac{T_s^2}{T_m^2}\right)\left(\frac{1-B_{wm}}{1-B_{ws}}\right)^2 \qquad \text{(A-47)}$$

Solving for ΔH:

$$\Delta H = D_n^4\left(\frac{\pi K_p C_p}{4K_m}\right)^2\left(\frac{1-B_{ws}}{1-B_{wm}}\right)^2\frac{M_m}{M_s}\frac{T_m}{T_s}\frac{P_s}{P_m}[\Delta p] \qquad \text{(A-48)}$$

Substituting $M_m = M_d\,(1 - B_{wm}) + 18B_{wm}$ and $M_s = M_d\,(1 - B_{ws}) + 18B_{ws}$

$$\Delta H = D_n^4 \left(\frac{\pi K_p C_p}{4K_m} \right)^2 \frac{(1-B_{ws})^2}{(1-B_{wm})^2} \left[\frac{M_d(1-B_{wm}) + 18B_{wm}}{M_d(1-B_{ws}) + 18B_{ws}} \right] \frac{T_m}{T_s} \frac{P_s}{P_m} [\Delta p] \qquad \text{(A-49)}$$

or

$$\Delta H = \left[846.72 \;\; D_n^4 \;\; \Delta H_@ \;\; C_p^2 (1-B_{ws})^2 \frac{M_d}{M_s} \frac{T_m}{T_s} \frac{P_s}{P_m} \right] \Delta p$$

when assuming

$B_{wm} = 0$

$\Delta H_@ = \dfrac{0.9244}{K_m^2}$

$K_p = 85.49$

A.7 Derivation of the Isokinetic Variation Equations

The term isokinetic sampling is defined as an equal or uniform sampling of gas in motion. This is accomplished when the fluid streamlines of the stack gas are not disturbed. The Method 5 source sampling system is designed to extract an isokinetic gas and particulate sample from a stack. A 100% isokinetic source sample is taken when the gas velocity into the sampling nozzle (v_n) is equal to the velocity of the approaching gas stream (v_s):

$$\text{\% isokinetic variation} = \frac{v_n}{v_s} \times 100 \qquad \text{(A-50)}$$

The stack gas velocity (v_s) is measured using a pitot tube to determine the stack gas impact and static pressures. Bernoulli's theorem applied for the pitot tube and solved for gas velocity gives the expression

$$v_s = K_p C_p \sqrt{\frac{T_s \, \Delta p}{P_s M_s}} \qquad \text{(A-51)}$$

The velocity of the gas entering the source sampling nozzle is determined from the principles in the equation of continuity. Solving the equation of continuity for velocity at the nozzle, we may express the relationship

$$v_n = \frac{Q_n}{A_n} \qquad \text{(A-52)}$$

The nozzle cross-sectional area (A_n) is measured directly. The volumetric flow rate of gas at nozzle conditions (Q_n) is determined by correcting the dry gas volume metered by the orifice back to stack conditions. The water vapor condensed in the impingers must be included in this correction. Liquid water collected is converted to vapor phase volume at stack conditions to obtain the volume sampled at the nozzle.

The liquid water condensed (V_{lc}) multiplied by the water density (ρ_{H_2O}) gives the mass of water collected in the impingers

$$(V_{lc})(\rho_{H_2O}) = m$$

In the ideal gas law

$$PV = \frac{m}{M_{H_2O}} RT \qquad \text{(A-53)}$$

Solving the expression for volume

$$V = \frac{T}{P} \frac{mR}{M_{H_2O}}$$

This provides the conversion of the volume of condensed liquid water (from the impingers) to vapor form in the stack gas (V_{SW})

$$(V_{lc})(\rho_{H_2O}) = m$$

$$V_{sw} = \frac{T_s}{P_s} \frac{mR}{M_{H_2O}}$$

$$V_{sw} = \frac{T_s}{P_s} \frac{(V_{lc})(\rho_{H_2O})R}{M_{H_2O}}$$

$$V_{sw} = \frac{T_s}{P_s}(V_{lc})K$$

The gas volume metered at the orifice is corrected for orifice pressure and temperature then added to V_{sw}. This total is corrected to stack conditions over the sampling time period to give Q_n

$$Q_n = \frac{\frac{T_s}{P_s}\left[(V_{lc})\,(K) + (V_m / T_m)\left(P_b + \frac{\Delta H}{13.6}\right)\right]}{\theta} \qquad \text{(A-54)}$$

Then, since

$$\%I = \frac{v_n}{v_s} \times 100$$

and

$$v_n = \frac{Q_n}{A_n}$$

we have by substitution

$$\%I = \frac{\frac{T_s}{P_s}\left[V_{lc}\,(K) + (V_m / T_m)\left(P_b + \frac{\Delta H}{13.6}\right)\right]}{\theta\, A_n v_s}$$

Rearranging terms and including a correction for converting minutes to seconds to cancel out dimensions, we obtain the expression given in Method 5 for isokinetic variation

$$\%I = 100 \times \frac{T_s\left[V_{lc}\,K + (V_m / T_m)\left(P_b + \frac{\Delta H}{13.6}\right)\right]}{60\,\theta\, A_n P_s v_s} \qquad \text{(A-55)}$$

with the constant (K) equal to

$$K = 0.002669 \frac{\text{in. Hg} - \text{ft}^3}{\text{ml} - °\text{R}} \quad \text{(English units)}$$

$$K = 0.003454 \frac{\text{mm Hg} - \text{m}^3}{\text{ml} - °\text{K}} \quad \text{(Metric units)}$$

A.8 DERIVATION OF THE CONCENTRATION CORRECTION EQUATIONS

After a value for the concentration of a pollutant in a flue gas stream is obtained by a reference method test, it is often necessary to correct the value to some standard set of conditions, which is done to compare the data from one source to that of another. Different stack temperatures and different amounts of excess air would make a comparison of the actual concentrations almost meaningless. Therefore, terms such as scfm for "standard cubic feet per minute" instead of acfm ("actual cubic feet per minute") and c_{Scorr} (corr. 50%) instead of c_s are generally used when reporting data. Note that in reporting data in units of the standard, E (lb/10^6 Btu heat input), the pollutant concentration is expressed as pounds per dry *standard* cubic foot and an excess air correction is included in the F factor equation (Chapter 7). In this section, derivations for correcting a concentration to standard conditions, 50% excess air, 12% $C0_2$, and 6% 0_2 are given.

CONCENTRATION CORRECTED TO STANDARD CONDITIONS

A concentration is expressed as weight (mass) per volume or lb/ft^3.

$$c_s = \frac{m}{V} \qquad \text{(A-56)}$$

The volume of gas passing through the nozzle will be at stack pressure and temperature. After going through the Method 5 train and meter, that temperature and pressure will change. A reference or standard set of conditions must be used, therefore, to make the data meaningful. The ideal gas law is used in these considerations:

$$PV = nRT \qquad \text{(A-57)}$$

$$V_{stack} = \frac{nRT_{stack}}{P_{stack}} \quad \text{and} \quad V_{\substack{\text{corr to}\\ \text{standard}\\ \text{conditions}}} = \frac{nRT_{std}}{P_{std}}$$

Clarification:

$$PV = mRT/M$$

(A-1)

$$n = m/M$$
$$PV=nRT$$

(A-57)

For the same number of moles of gas (n), the volume that that number would occupy at standard conditions would be as follows.

Dividing

$$\frac{V_{corr}}{V_s} = \frac{\dfrac{nRT_{std}}{P_{std}}}{\dfrac{nRT_s}{P_s}} = \frac{T_{std}P_s}{T_sP_{std}} \qquad \text{(A-58)}$$

Clarification:

$$V_{stack} = V_s \text{ (and same for T and P),}$$

or

$$V_{corr} = V_s \frac{T_{std}P_s}{T_sP_{std}}$$

and

$$c_s \text{ (at standard conditions)} = \frac{m}{V_{corr}} = \frac{m}{V_s}\frac{T_sP_{std}}{T_{std}P_s}$$

$$c_{s_{corr}} = c_s \frac{T_sP_{std}}{T_{std}P_s}$$

EPA has defined T_{std} = 68 °F / 20 °C (527.49 °R / 293.16 K), and P_{std} = 29.92 in. Hg. (1 atm)
To report a concentration on a dry basis, the volume must be expressed as if all water had been removed. The value of B_{ws} must be known in this case.

$$V_{dry} = V_{wet} - V_{wet}B_{ws} \qquad \text{(A-59)}$$

$$V_{dry} = V_{wet}(1 - B_{ws})$$

or

$$c_{s_{(dry)}} = \frac{m}{V_{dry}} = \frac{m}{V_{wet}(1 - B_{ws})}$$

$$c_{s_{(dry)}} = \frac{c_{s_{(wet)}}}{(1 - B_{ws})}$$

Combining these two corrections,

$$c_s \text{ (corr to dry standard conditions)} = \frac{c_{s_{(wet)}}}{(1 - B_{ws})}\frac{T_sP_{std}}{T_{std}P_s} \qquad \text{(A-60)}$$

EXCESS AIR

Several types of concentration corrections have been devised based on the combustion characteristics of fossil fuels. Excess air is defined as that percentage of air added in excess of that required to just combust a given amount of fuel. Normally, to achieve efficient fuel combustion, more air is needed than the stoichiometric amount, i.e., one carbon atom and two oxygen molecules.

Depending on the amount of excess air, different concentrations of carbon dioxide and oxygen in the stack gas will result, as shown in Figure A-4.

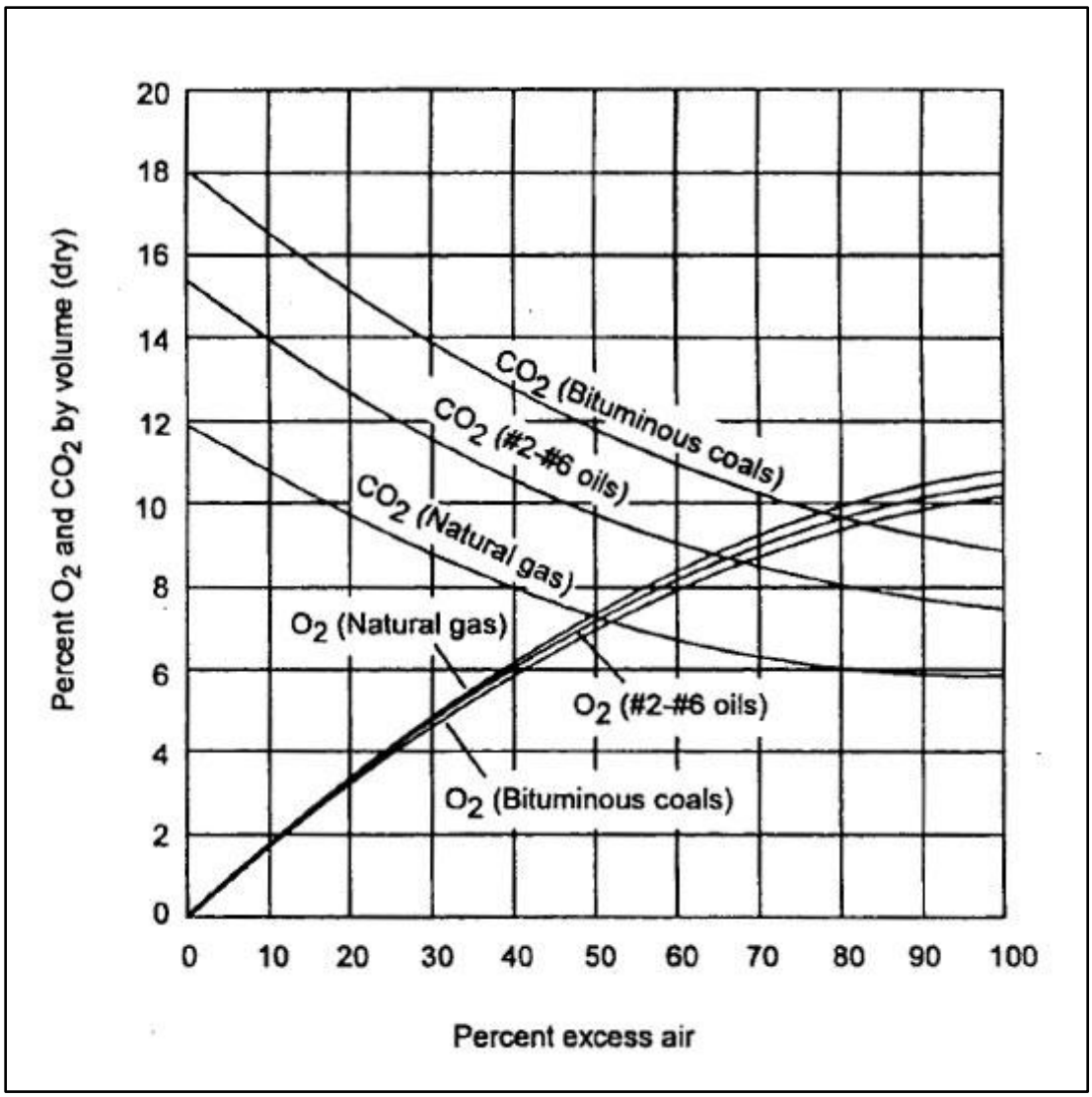

Figure A-11. Concentrations of $C0_2$ and 0_2 in stack by amount of excess air.

Since the concentration of the pollutants produced in the source could be reduced by adding more excess air, (i.e., if c_s= m/V, if V is increased with m constant, c_s would decrease), it has been found necessary in some cases to correct to a given excess air condition. A value of 50% excess air has been chosen as a reference condition since at one time many boilers operated at this condition. Note also that if such a correction is made, that it will account for dilution caused by air leaking in at the preheater or other duct work.

$$\%EA = \frac{\%O_2 - 0.5\%CO}{0.26\%N_2 - (\%O_2 - 0.5\%CO)} \times 100 \qquad \text{(A-61)}$$

To derive this expression, gas volumes associated with the combustion of the fuel must be considered.

$$V_{th} = V_T - V_{EA} \qquad \text{(A-62)}$$

stoichiometric volume of air required to consume an amount of fuel

total volume of air used

volume of air in excess of $Y_{Theoretical}$

Assuming that air is composed of 79% nitrogen and 21% oxygen, all oxygen would be consumed by complete stoichiometric combustion and

$$V_{N_2} = 0.79V_{th} \qquad \text{(A-63)}$$

$$V_{th} = \frac{V_{N_2}}{0.79}$$

Remember, however, that when excess air is added, the oxygen contained in that volume will not react since there will be no carbon left to consume it,

or

$$V_{O_2}\,(\text{remaining}) = 0.21V_{EA} \qquad \text{(A-64)}$$

The problem of incomplete combustion must also be considered in this calculation. Carbon monoxide is produced if burning conditions are not adequate.

$$C + O_2 \longrightarrow CO + \frac{1}{2}O_2$$

The amount of oxygen remaining in the flue gas must then be corrected for incomplete combustion since for each two molecules of CO produced, one molecule of oxygen will result,

$$0.5V_{CO} = V_{O_2}\ \text{(incomplete combustion)} \qquad \text{(A-65)}$$

Equation A-64 must be modified so that

$$V_{O_2}\,(\text{remaining}) = 0.21V_{EA} + 0.5V_{CO} \qquad \text{(A-66)}$$

Looking at this another way, one-half an oxygen molecule is released for each carbon monoxide molecule and would contribute to V_{O_2} (remaining). Therefore, from Eq. A-66

$$V_{EA} = \frac{V_{O_2} - 0.5V_{CO}}{0.21} \qquad \text{(A-67)}$$

Substituting Eq. A-63 and Eq. A-67 into Eq. A-62, we have

$$V_{th} = V_T - V_{EA} \qquad \text{(A-68)}$$

$$V_{th} = \frac{V_{N_2}}{0.79} - \frac{(V_{O_2} - 0.5V_{CO})}{0.21}$$

Percent excess air is defined as that percent of air in excess of that needed for complete combustion, or

$$\%EA = \frac{V_{EA}}{V_{th}} \times 100 \qquad \text{(A-69)}$$

Therefore:

$$\%EA = \frac{\dfrac{V_{O_2} - 0.5V_{CO}}{0.21}}{\dfrac{V_{N_2}}{0.79} - \dfrac{(V_{O_2} - 0.5V_{CO})}{0.21}} \times 100 \qquad \text{(A-70)}$$

$$\%EA = \frac{V_{O_2} - 0.5V_{CO}}{0.26V_{N_2} - V_{O_2} + 0.5V_{CO}} \times 100 \qquad \text{(A-71)}$$

Divide the numerator and denominator by V_T to obtain

$$\%EA = \frac{V_{O_2}/V_T - 0.5V_{CO}/V_T}{0.26V_{N_2}/V_T - V_{O_2}/V_T + 0.5V_{CO}/V_T} \times 100$$

$$\%EA = \frac{\%O_2 - 0.5\%CO}{0.26\%N_2 - \%O_2 + 0.5\%CO} \times 100 \qquad \text{(A-72)}$$

Concentration Corrected to 50% Excess Air

To correct a pollutant concentration to 50% excess air:

$$\frac{V_{EA} \pm \Delta V}{V_{th}} \times 100 = 50\%EA \qquad \text{(A-73)}$$

Where: ΔV = the volume that would have to be added or subtracted to give 50% EA.

$$\Delta V = V_{EA} \pm 0.5V_{th}$$

and

$$F_{EA}V_T = V_T \pm \Delta V$$

Where: F_{EA} = the proportion of V_T that would have to be changed to give 50% EA.

$$F_{EA} = \frac{V_{EA} \pm \Delta V}{V_T} = \frac{V_{th} + V_{EA} - V_{EA} + 0.5V_{th}}{V_{th} + V_{EA}}$$

$$= \frac{1.5V_{th}}{V_{th} + V_{EA}}$$

Divide the numerator and denominator by V_{th} to obtain

$$F_{EA} = \frac{1.5}{1 + \frac{V_{EA}}{V_{th}}} = \frac{150}{100 + \%EA} \qquad \text{(A-74)}$$

Therefore, since

$$c_s = \frac{m}{V_T}$$

$$c_s \text{ (corrected 50\% EA)} = \frac{m}{V_T F_{EA}} = \frac{m}{V_T \left(\frac{150}{100 + \%EA} \right)}$$

$$c_s \text{ (corr)} = c_s \left(\frac{150}{100 + \%EA} \right) \qquad \text{(A-75)}$$

It should be noted that there is a method of calculating c_s, corrected to 50% EA without first calculating % EA.

Starting from

$$F_{EA} = \frac{V_T \pm \Delta V}{V_T} = 1 - \frac{(V_{EA} - 0.5V_{th})}{V_T} \qquad \text{(A-76)}$$

$$F_{EA} = 1 - \left(\frac{V_{EA} - 0.5(V_T - V_{EA})}{V_T} \right)$$

$$= 1 - \left(\frac{1.5V_{EA} - 0.5V_T}{V_T} \right)$$

from Eq. A-63 and Eq. A-68, we have

$$= 1 - \left[\frac{1.5\,(V_{O_2} - 0.5V_{CO}) - 0.5 \left(\frac{V_{N_2}}{0.79} \right)}{V_T} \right]$$

$$= 1 - \frac{1.5\%O_2 - 0.75\%CO - 0.133\%N_2}{21}$$

and

$$c_s\,(\text{corr}) = \frac{m}{V_T F_{EA}} = c_s \frac{1}{1 - \left[\dfrac{1.5\%O_2 - 0.75\%CO - 0.133\%N_2}{21}\right]} \qquad \text{(A-77)}$$

It should be noted that Eq. A-75 and Eq. A-76 are not equivalent and cannot be made equivalent. They do, however, give the same answers using values characteristic of combustion sources. Note that Eq. A-69 becomes discontinuous for percent excess air as the flue gas approaches a composition corresponding to that of air (neglecting carbon monoxide). Equation A-75 also becomes discontinuous under certain conditions (e.g., $\%O_2 = 7.7\%$, $\%N_2 = 79$, $\%CO = 0$).

Correcting Concentration to 12% CO_2

The derivations for correcting a concentration to 12% CO_2 or 6% O_2 are similar to that for the 50% excess air correction. For a correction to 12% CO_2 in the flue gas:

$$\frac{V_{CO_2}}{V_T \pm \Delta V} = 0.12 \qquad \text{(A-78)}$$

or

$$F_{CO_2} V_T = V_T \pm \Delta V$$

Where: ΔV = amount of air added or subtracted to give 12% CO_2

F_{CO_2} = the fraction by which V_{actual} would have to be reduced or increased to do this

Substituting,

$$\frac{V_{CO_2}}{F_{CO_2} V_T} = 0.12 \qquad \text{(A-79)}$$

and

$$F_{CO_2} = \frac{\%CO_2}{12} \qquad \text{(A-80)}$$

$$c_{s12\%CO_2} = \frac{m}{V_T F_{CO_2}} = \frac{c_s}{F_{CO_2}}$$

$$c_{s12\%CO_2} = \frac{12}{\%CO_2} c_s$$

Correcting Concentration to 6% 0_2

Instead of correcting a concentration to 12% CO_2, a correction may be made using just the oxy- gen concentration. The oxygen correction is somewhat more complicated than that for carbon dioxide, since dilution air will contain oxygen.

The derivation begins with

$$\frac{V_{O_2} \pm 0.21\Delta V}{V_T \pm \Delta V} = 0.06 \qquad \text{(A-81)}$$

Where: V= the amount of air added or subtracted to give 6% O_2 in the corrected volume. Note that the term ± 0.21ΔV is due to the oxygen contained in the air.

When: F_{O_2} = is the fractional amount, V_T must be changed,

$$F_{O_2} V_T = V_T - \Delta V \qquad \text{(A-82)}$$

and substituting into Eq. A-81

$$\frac{V_{O_2} + 0.21V_T - 0.21V_T \pm 0.21\Delta V}{V_T - \Delta V} = 0.06$$

$$\frac{V_{O_2} - 0.21V_T + 0.21F_{O_2} V_T}{F_{O_2} V_T} = 0.06$$

$$V_{O_2} - 0.21V_T = -0.15F_{O_2} V_T$$

and

$$F_{O_2} = \frac{0.21V_T - V_{O_2}}{0.15V_T} = \frac{21 - \%O_2}{15} \qquad \text{(A-83)}$$

and similarly to the previous derivations

$$c_s\,(6\%O_2) = \frac{15c_s}{21 - \%O_2} \qquad \text{(A-84)}$$

Note that if a correction to 3% O_2 was needed

$$c_s\,(3\%O_2) = \frac{18c_s}{21 - \%O_2} \qquad \text{(A-85)}$$

APPENDIX B: UNITS AND CONVERSION FACTORS

This appendix introduces the units and conversion factors that are used throughout this course on source sampling for pollutants.

B.1 UNITS

CONSTANTS

Avogadro's number	6.02×10^{23} atoms/g-mole
Gas constants	82.05 atm cm^3/(g mole)(°K)
1.987 cal/(g-mole)(°K)	
10.731 ft lb $in.^2$/(lb mole)(°R)	
0.732 ft^3 atm/(lb mole)(°R)	
(I) g mole	22.4 L ideal gas at standard temperature and pressure (0°C 1 atm)
(I) lb mole	359 ft^3 ideal gas at standard temperature and pressure (32°F 1 atm)

EPA Standard Conditions

T_{std} = 20° C (68° F)
P_{std} = 29.92 in. Hg (1 atm)

CONVERSION EXPRESSIONS

Temperature

°K= °C + 273.16	Degrees Kelvin
°R = °F + 459.49 = l.8 °K	Degrees Rankine
°C = 5/9 x (°F -32)	
°F = 9/5 x (°C) + 32	

Gas Concentration Units

ppm = parts per million
mg = milligram
m^3 = cubic meters
dscm = dry standard cubic meters
MW = molecular weight
T_{std} = standard temperature in degrees Kelvin
To convert ppm to mg/m^3 at a set of standard conditions

$$\text{mg/dscm} = \frac{\text{ppm} \times \text{MW}}{22.414 \times (T_{std} / 273.16)}$$

B.2 CONVERSION FACTORS

Table B-9. Conversion factors.
Energy
1 Btu = 1055 joule
Length
1 in. = 2.54 cm
1 ft = 0.305 m
Mass
1 g = 0.0022 lb
1 lb = 453.6 g
1 lb = 7000 grains
Mass per unit volume
1 g/m^3 = 0.0283 g/ft^3
1 lb/ft^3 = 16.02 kg/m^3
Pressure
1 atm = 1.01325×10^5 Pa = 14.696 $lb/in.^2$ (psi)
= 760 torr = 407.2 in H_2O
Power
1 Btu/hr = 0.2931 kW
1 kW = 3413 Btu/hr
1 MW = 341,300 Btu/hr
Volume
1 ft^3 = 0.02832 m^3 = 2.8321×10^4 cm^3
1 m^3 = 35.31 ft^3

Table B-10. Mass, pressure.

Multiply	By	To Obtain
Atmospheres	29.92	Inches of Mercury
Atmospheres	33.90	Feet of water
Atmospheres	14.70	Pounds/square inch
Feet of water	0.02947 0.04335 62.378	Atmospheres Pounds/square inch Pounds/square foot
Inches of Mercury	0.03342	Atmospheres

	13.60 1.133 0.4912 70.727 345.32	Inches of water Feet of water Pounds/square inch Pounds/square foot Kilograms/square meter
Inches of water	0.03609 5.1981 25.38	Pounds/square inch Pounds/square foot Kilograms/square meter
Kilograms/square centimeter	0.9678 14.22	Atmospheres Pounds/square foot
Kilograms/square meter	0.00142 0.20482 0.00328 0.1	Pounds/square inch Pounds/square foot Feet of water Grams/square centimeter
Kilograms	2.2046	Pounds
Pounds	453.5924	Grams
Pounds of water	0.01602	Cubic feet
Pounds of water	0.1198	Gallons
Multiply	**By**	**To Obtain**
Pounds/square inch	0.06804	Atmospheres
Pounds/square inch	2.307	Feet of water
Pounds/square inch	70.31	Grams/square centimeter
Pounds/square inch	2.036	Inches of Mercury

Table B-11. Capacity, energy, force, heat.		
Multiply	**By**	**To Obtain**
Btu	0.252	Kilogram-calories
Btu	9.48×10^{-4}	Watt-seconds (joules)
Btu/min	3.927×10^{-4}	Horsepower-hours
Btu/min	2.928×10^{-4}	Kilowatt-hours
Btu/min	0.02356	Horsepower
Btu/min	0.01757	Kilowatts
Btu/min	1×10^{-3}	Pound/hour steam
Horsepower (boiler)	33,479	Btu/hour
Horsepower (boiler)	9.803	Kilowatts
Horsepower-hours	0.7457	Kilowatt-hours
Kilowatts	56.92	Btu/minute
Kilowatts	1.341	Horsepower
Kilowatt-hours	3415	Btu
Kilowatt-hours	1.341	Horsepower-hours
Megawatts	1360	Kilogram/hour steam
Pounds/hour steam	0.454	Kilogram/hour

BIBLIOGRAPHY

Air Pollution Training Institute. 1974. *Source Sampling for Particulate Emissions*, Research Triangle Park, NC.

Beer, Y. 1958. *Theory of Errors*. Reading, MA: Addison-Wesley Publishing Co.

Brenchley, D. L., Turley, C. D, Yarmac, R. F. 1973 *Industrial Source Sampling*. Ann Arbor, MI: Ann Arbor Science Publishers Inc.

Brooks, E. F., Williams, R. L. 1976. *Flow and Gas Sampling Manual*. EPA 600/2-76-203.

Cooper, H.B. H., Jr.:. Rossano, A. T., Jr. Source Testing for Air Pollution Control. Wilton, CT: Environmental Research and Applications Inc.; 1971.

Devorkin, H., Chass, R. L., Fudurich, A. P., Kanter, C. V. 1965. *Source Testing Manual*. Los Angeles, CA. Los Angeles County Air Pollution Control District.

Harris, D. B. 1977. *Procedures for Cascade Impactor Calibration and Operation in Process Streams*. EPA-600/2-77-004.

Hawksley, P.G. W., Badzioch, S., and Blackett, J.H. *Measurement of Solids in Flue Gases*. The Institute of Fuel, London.

Lapple, C. E. 1956. *Fluid and Particle Mechanics*. Newark, DE: University of Delaware.

Mitchell, W. J., and Midgett, M. R. 1976. Field Reliability of the Orsat Analyzer; J. Air Pollution Control Assoc. 26 (5): 491.

Neulicht, R. M. 1973. *Emission Correction Factor for Fossil Fuel-Fired Steam Generators*. Stack Sampling News 2 (8): 6-11 July 1973.

Perry, J. H. 1973. Chilton, C.H. *Chemical Engineering Handbook*. 5th ed. New York: McGraw Hill Book Company Inc.

Resnick, R., Holliday, D. 1968. *Physics for Students of Science and Engineering*. New York: John Wiley and Sons, Inc.

Shigehara, RT., Neulicht, R. M., and Smith, W. S. 1973. *A Method for Calculating Power Plant Emissions*. Stack Sampling News I (I): 5-9 July 1973.

Shigehara, R. T., Neulicht, R. M. 1976. *Derivation of Equations for Calculating Power Plant Emission Rates, 0_2 Based Method: Wet and Dry Measurements*. Internal EPA Monograph, Research Triangle Park, NC: Environmental Protection Agency, OAQPS, ESED, Emission Measurement Branch.

Shigehara, R. T., Neulicht, R. M., Smith, W. S., Peeler, J. W. 1976, *Summary of F Factor Methods for Determining Emissions from Combustion Sources*. Source Evaluation Society Newsletter, Vol. I, No. 4, November 1976.

Smith, F., Wagoner, D., Nelson, A. C. 1974. *Guidelines for Development of a Quality Assurance Program: Volume I - Determination of Stack Gas Velocity and Volumetric Flow Rate, (Type S Pitot Tube)*. EPA 650/4-74-005-a, February 1974.

Smith, F., Wagoner, D. 1974. *Guidelines for Development of a Quality Assurance Program: Volume IV - Determination of Particulate Emissions from Stationary Sources.* EPA 650/4-74-005-d, August 1974.

Steere, N. V. 1967. *Handbook of Laboratory Safety*. Cleveland, OH: The Chemical Rubber Co.

Stern, A. C. 1976. *Air Pollution: Third Edition, Volume III, Part C*. New York: Academic Press.

Vollaro, R. F. 1976. *The Effects of Impact Opening Misalignment on the Value of The Type S Pi tot Tube Coefficient*. Unpublished Paper, Emission Measurement Branch, October 7, 1976.

Vollaro, R. F. 1976. *Establishment of a Baseline Coefficient Value for Properly Constructed Type S Pitot Tubes*. Unpublished Paper, EPA Emission Measurement Branch, April 20, 1977.

Vollaro, R. F. 1977. *Recommended Procedure for Sample Traverses in Ducts Smaller than 12 Inches in Diameter*. United States Environmental Protection Agency. Unpublished Paper, EPA Emission Measurement Branch, January 3, 1977.

Vollaro, R. F. 1977. *The Use of Type-S Pi tot Tubes for the Measurement of Low Velocities*. Unpublished Paper, EPA Emission Measurement Branch, January 19, 1977.

Publications of the U. S. Environmental Protection Agency, Research Triangle Park, NC.

Guidelines for Development of a Quality Assurance Program: Volume IV - Determination of Particulate Emissions from Stationary Sources. EPA-650/4-74-005-d.

Procedures for Cascade Impaction Calibration and Operation in Process Streams, EPA-600/2-77-004.

Particulate Sizing Techniques for Control Device Evaluation. EPA-650/2-74-102-a.

Collection Efficiency Study of the Proposed Method 13 Sampling Train. EPA-600/2- 75-052 .

Rapid Method for Determining NO_X Emissions in Flue Gases. EPA-600/2-75-052.

Collaborative Study of Method for the Determination of Particulate Matter Emissions from Stationary Sources. EPA-650/4-74-029.

Collaborative Study of Method for Stack Gas Analysis and Determination of Moisture Fraction with use of Method 5. EPA-650/4-73-026.

Collaborative Study of Method for Determination of Stack Gas: Velocity and Volumetric Flow Rate in Conjunction with EPA Methods. EPA-650/4-74-033.

Method for Obtaining Replicate Particulate Samples from Stationary Sources. EPA-650/4- 75-025.

Collaborative Study of Particulate Emissions Measurements by EPA Methods 2, 3, and 5 using Paired Particulate Sampling Trains (municipal incinerators). EPA-600/4-76-014.

HP-65 Programmable Pocket Calculator Applied to Air Pollution Measurement Studies: Stationary Sources. EPA-600/8-76-002.

HP-25 Programmable Pocket Calculator Applied to Air Pollution Measurement Studies: Stationary Sources. EPA-60017-77-058.

Flow and Gas Sampling Manual. EPA-600/2-76-023.

Continuous Measurement of Total Gas Flow Rate from Stationary Sources. EPA-650/2- 75-020.

Quality Assurance Handbook for Air Pollution Measurement Systems - Vol. III – Stationary Source

Specific Methods. EPA-600/-77-027.