United States
Environmental Protection
Agency

Office of Research and
Development
Cincinnati, OH 45268

EPA/625/R-93/005
March 1994

EPA

Handbook

Control Techniques for Fugitive VOC Emissions from Chemical Process Facilities

EPA/625/R-93/005
March 1994

Handbook

Control Techniques for Fugitive VOC Emissions from Chemical Process Facilities

Center for Environmental Research Information
Office of Research and Development
U.S. Environmental Protection Agency
Cincinnati, Ohio 45268

Printed on Recycled Paper

Notice

The information in this document has been funded wholly, or in part, by the U.S. Environmental Protection Agency (EPA) under Contract No. 68-C1-0018, Work Assignment No. B-9, issued to Pacific Environmental Services, Inc. (PES), as a subcontractor to Eastern Research Group, Inc. (ERG). This document has been subjected to EPA's peer and administrative review and has been approved for publication as an EPA document. Mention of trade names or commercial products does not constitute endorsement or recommendation for use.

Acknowledgments

This document was prepared under Contract No. 68-C1-0018, WA No. B-9, by Pacific Environmental Services, Inc. (PES), as a subcontractor to Eastern Research Group, Inc. (ERG), and under the sponsorship of the U.S. Environmental Protection Agency (EPA). Justice A. Manning of the EPA Office of Research and Development, Center for Environmental Research Information, was the project officer responsible for the preparation of this document. Special acknowledgment is given to Daniel Couturier and David Markwordt of the EPA Office of Air Quality Planning and Standards for their assistance, comments, and technical review of early drafts of this Handbook and to the numerous individuals who responded so generously to our information and reference requests. Very helpful comments were received from the American Petroleum Institute's Air Toxics Multi-Year Task Force. Representatives from the Chemical Manufacturer's Association also reviewed the draft report. Participating in the development of this document for PES were: Eric Hollins, John Chehaske, Kenneth Meardon, Paul D. Koch, Andrew Weisman, and Nancy Golden. Also, Douglas A. Coggeshall, formerly with Dresser Valves, is extended appreciation for technical review and comment.

Contents

Page

List of Figures ..... **vii**

List of Tables ..... **viii**

Acronyms ..... **ix**

Chapter 1 Introduction **1**
- 1.1 Handbook Objectives 1
- 1.2 VOC Emission Control Techniques 1
- 1.3 Handbook Organization 2
- 1.4 References 4

Chapter 2 Regulatory Requirements for Fugitive Emissions **5**
- 2.1 Introduction 5
- 2.2 Federally Regulated Source Categories 6
- 2.3 State Regulation of VOC Sources 25
- 2.4 References 26

Chapter 3 Regulated Equipment **27**
- 3.1 Pumps 27
- 3.2 Compressors 29
- 3.3 Pressure Relief Devices 31
- 3.4 Sampling Connections 32
- 3.5 Open-ended Lines or Open Valves 32
- 3.6 Process Valves 32
- 3.7 Flanges and Other Connectors 34
- 3.8 Product Accumulator Vessels 34
- 3.9 Agitators 35
- 3.10 Closed-Vent Systems and Control Devices 35
- 3.11 References 35

Chapter 4 Monitoring Requirements **37**
- 4.1 Overall Survey Procedure 37
- 4.2 Monitoring Instruments 38
- 4.3 Screening Protocols 44

Contents (continued)

Chapter 4 Monitoring Requirements (continued)

4.4 Data Handling 46
4.5 Calibration Procedures for Quality Assurance 47
4.6 References 47

Chapter 5 NSPS and NESHAP Equipment Leak Records and Reports 49

5.1 Recordkeeping 49
5.2 Reporting 50
5.3 References 53

Chapter 6 Data Management Systems 55

6.1 Manual Data Management 55
6.2 Automated Data Management 57
6.3 Reference 57

Chapter 7 Engineering Considerations 65

7.1 Developing Emission Estimates 65
7.2 References 72

Appendix A Chemical Processes Affected by the Proposed HON Regulation 73

Appendix B Volatile Hazardous Air Pollutants (VHAPs) Covered by the HON 87

Appendix C Methods 21 and 22 93

Appendix D Response Factors 105

Appendix E Example Semiannual NESHAP Report (illustrating a pump repair record) 117

Appendix F Example Initial Semiannual NSPS Report 123

Appendix G Example Semiannual NSPS Report 127

Appendix H Example Benzene Semiannual NESHAP Report 131

Appendix I Example Semiannual NESHAP Report (illustrating a skip program and a difficult-to-monitor valves program) 137

Appendix J Example Semiannual NESHAP Report (closed-vent system; itemized revisions) 143

Appendix K Sample Forms 149

List of Figures

Figure		Page
1-1	LDAR model flow diagram	3
3-1	Diagram of simple packed seal	27
3-2	Diagram of basic single mechanical seal	28
3-3	Typical arrangements of dual mechanical pump seals	28
3-4	Diagram of seal-less canned-motor pump	29
3-5	Diagram of diaphragm pump	29
3-6	Typical designs of mechanical compressor seals	30
3-7	Diagram of a spring-loaded relief valve	31
3-8	Typical design of a pressure relief valve mounted on a rupture disc device	32
3-9	Diagram of two closed-loop sampling systems	32
3-10	Diagram of a globe valve with a packed seal	33
3-11	Diagram of a ball valve	33
3-12	Diagram of a sealed bellows valve	34
3-13	Diagram of a weir diaphragm seal	34
3-14	Diagram of a bonnet diaphragm seal	34
4-1	Primary valve maintenance points	45
6-1	Calibration precision for portable VOC detector—ID# ___	58
6-2	Instrument calibration for portable VOC detector—ID# ___	59
6-3	Pump identification form	60
6-4	Equipment monitoring form	61
6-5	Unsafe- and difficult-to-monitor valves	62
6-6	Leak detection report	63
7-1	Strategy for estimating emissions from equipment leaks	66

List of Tables

Table		Page
1-1	Reduction Efficiencies for SOCMI Valves and Pumps Based on LDAR Model	2
1-2	NSPS and CTG Control Levels for SOCMI Fugitive Emissions	4
2-1	Effect of Equipment Leak Controls	6
2-2	NSPS Regulations—40 CFR Part 60	7
2-3	NSPS Equipment Leak Standards—Affected Facility Definitions	13
2-4	Process Unit Definitions—Specific Qualifiers	13
2-5	Equipment Definitions	14
2-6	Recordkeeping Requirements	25
2-7	Reporting Requirements	25
4-1	Fugitive Emission Sources	37
4-2	Performance Criteria for Portable VOC Detectors	39
4-3	Portable VOC Detection Instrument Performance Specifications	41
4-4	Example of a Datasheet	46
5-1	Illustration of Skip-Period Monitoring	51
7-1	Average Emission Factors for Fugitive Emissions	65
7-2	Leaking and Nonleaking Emission Factors for Fugitive Emissions	67
7-3	Estimate of "Uncontrolled" Fugitive Emissions for a Hypothetical Case	68
7-4	Stratified Emission Factors for Equipment Leaks	69
7-5	Estimate of Fugitive Emissions Using Stratified Emission Factors for a Hypothetical Case	69
7-6	Prediction Equations for Nonmethane Leak Rate for Valves, Flanges, and Pump Seals in SOCMI Process	70
7-7	Default Zero Values and Emission Rates	70
7-8	Bagging Strategies	71
A-1	Chemical Processes Affected by the Proposed HON Regulation	74
B-1	Volatile Hazardous Air Pollutants (VHAPs) Covered by the HON	88
D-1	Response Factors for Foxboro OVA-108 and Bacharach TLV Sniffer at 10,000 ppmv Response	106
D-2	Tested Compounds Which Appear To Be Unable To Achieve an Instrument Response of 10,000 ppmv at Any Feasible Concentration	109
D-3	Response Factors for AID Model 580 and Model 585 Photoionization Type Organic Vapor Analyzers	110
D-4	Response Factors for the MIRAN Model 1A/80 Infrared Analyzer	111
D-5	Response Factors for the HNU Systems, Inc., Model PI-101 Photoionization Analyzer	116
E-1	National Emissions Standards for Hazardous Air Pollutants Benzene Equipment Leaks, 401 KAR 57:040	119
E-2	Dates of Process Unit Shutdowns	120
E-3	Additions/Deletions	121
E-4	Devices Found Leaking During Quarterly Monitoring Required Under 401 KAR 61:137	122
G-1	NSPS-VOC Leak Monitoring Results, July-December 1987	129
G-2	NSPS-VOC Process Units' Downtime Summary, July-December 1987	130

Acronyms

ASTM	American Society for Testing and Materials
BDT	best demonstrated technology
CAAA	Clean Air Act Amendments of 1990
CO	carbon monoxide
CO_2	carbon dioxide
CTG	control techniques guideline
EE	emission estimate
EPA	U.S. Environmental Protection Agency
FID	flame ionization detector
GC	gas chromatograph
HL	heavy liquid
HON	hazardous organic NESHAPs
ID	identification
LDAR	leak detection and repair
LEF	leaking emission factor
LL	light liquid
Mg	megagram
N	nitrogen
NAAQS	national ambient air quality standard
NDIR	nondispersive infrared
NESHAP	national emissions standards for hazardous air pollutants
NGL	natural gas liquid
NLEF	nonleaking emission factor
NOx	nitrogen oxides
NSPS	new source performance standard
O	oxygen
OVA	organic vapor analyzer
PCL	percent of sources found leaking
PID	photoionization detectors
PRV	pressure relief valve
PSD	prevention of significant deterioration
RACT	reasonably available control technology
RCRA	Resource Conservation and Recovery Act
RF	response factor
SARA	Superfund Amendments and Reauthorization Act
SIP	state implementation plan
SOCMI	synthetic organic chemicals manufacturing industry
TLV	threshold limit value
TSDF	treatment, storage, and disposal facility
VHAP	volatile hazardous air pollutant
VOC	volatile organic compound

Chapter 1
Introduction

1.1 Handbook Objectives

Techniques for controlling fugitive volatile organic compound (VOC) emissions from chemical process facilities are evolving continually to meet increasingly stringent emission standards, such as those outlined in the hazardous organic national emissions standards for hazardous air pollutants (HON) emission regulations (57 FR 62607) proposed December 31, 1992. As emission control techniques become more complex, the need for guidance on complying with emission standards becomes more important. This handbook is a general guide to emission control strategies that can be implemented under existing regulations. Most of these strategies will be applicable under the HON regulations, but the more stringent HON limits may require additional controls. The handbook contains a detailed review of established new source performance standards (NSPSs) and national emissions standards for hazardous air pollutants (NESHAPs), as well as information on the Resource Conservation and Recovery Act (RCRA) standards for hazardous waste treatment, storage, and disposal facilities (TSDFs); additional state requirements; and the HON standards. The handbook is intended to assist small- to medium-sized businesses and industries that are subject to NSPSs, NESHAPs, and other pertinent regulations.

1.2 VOC Emission Control Techniques

No single emission control technique can be used for all equipment leaks (U.S. EPA, 1986). The techniques used to control emissions from equipment leaks can be separated into two categories: equipment practices and work practices.

1.2.1 Equipment Practices

Equipment practices involve the use of equipment to reduce or eliminate emissions. A common example is an add-on control device, such as an incinerator, that is used to reduce organic emissions from a process vent. Other equipment controls include 1) leakless technology for valves and pumps; 2) plugs, caps, and blinds for open-ended lines; 3) rupture discs and soft seats (O-rings) for pressure relief valves (PRVs); 4) dual mechanical seals with non-VOC barrier fluid/degassing vent systems for rotary equipment; 5) closed-loop sampling systems; and 6) enclosure of seal area/vent to a combustion control device for dynamic seals. These equipment controls generally can attain up to 100 percent reduction of emissions. Mechanical seals and techniques that rely upon combustion control have been assigned an overall control efficiency of 95 percent, which is consistent with the efficiencies assigned to other frequently applied recovery techniques (U.S. EPA, 1986, p. 4-1).

1.2.2 Work Practices

Work practices refer to the plans and procedures undertaken to reduce or estimate emissions. Work practices are the most commonly used control techniques for equipment leaks. The primary work practice applied to pressure relief valves, other valves, pumps, and other sources is leak detection and repair (LDAR) of sources (U.S. EPA, 1986, p. 4-1).

The emissions reduction potential for LDAR is highly variable and depends upon several factors, including the frequency of monitoring (surveying) sources for leaks and the threshold definition of a leak. A monthly monitoring plan is generally more effective than a quarterly monitoring plan in reducing emissions, since leaks are found and corrected more quickly. Similarly, a maintenance system that corrects smaller leaks usually is more effective than a system that responds only to larger leaks.

Characteristics of individual sources can affect the emissions reduction achieved by LDAR. Important characteristics include leak occurrence rate, leak recurrence rate, accessibility of leaking equipment, and repair effectiveness. Using specific source characteristics, control effectiveness can be evaluated for different monitoring plans using the LDAR Model (Williamson et al., 1981), a set of recursive equations that operates on an overall population of sources. In this model, sources are segregated into the following subgroups for any given monitoring interval: 1) sources that leak due to the leak occurrence rate; 2) sources that leak and cannot be repaired below the 10,000 ppmv leak definition; 3) sources that leaked, were repaired successfully, but leaked again soon after the

repair (i.e., those that experienced leak recurrence); and 4) sources that do not leak (i.e., those screening below the 10,000 ppmv leak definition). The relative numbers of sources in each subgroup change with each monitoring interval step, based on the characteristics for the sources. These subgroups, and the manner in which they interact according to the individual source characteristics, are shown in Figure 1-1 (U.S. EPA, 1980).

Complex monitoring plans, such as the plan permitted by EPA under its equipment leak standard for valves in the synthetic organic chemicals manufacturing industry (SOCMI), can be examined using the LDAR Model. The SOCMI plan allows quarterly monitoring of all valves, supplemented by monthly monitoring of those valves that leaked and were repaired (U.S. EPA, 1980).

Presented in Table 1-1 are the results of simple monthly, quarterly, semiannual, and annual LDAR modeling published by EPA for valves and pumps in the SOCMI. The monthly/quarterly hybrid program allowed by EPA for valves also is shown. These results indicate that, as monitoring frequency increases, so does the anticipated emissions reduction. Furthermore, the results indicate some instances with no substantial advantage in reducing emissions, because monitoring and repair are too infrequent. Such results, however, are subject to interpretation for specific cases, since they are based on average input values for an entire industry (U.S. EPA, 1986, p. 4-4).

Table 1-1. Reduction Efficiencies for SOCMI Valves and Pumps Based on LDAR Model

	Source Type		
Monitoring Interval	**Valves, Gas**	**Valves, Light Liquid**	**Pumps, Light Liquid**
Monthly	0.73	0.59	0.61
Monthly/quarterly*	0.65	0.46	—
Quarterly	0.64	0.44	0.33
Semiannual	0.50	0.22	(0.076)
Annual	0.24	(0.19)	(0.80)

* Monthly monitoring with quarterly monitoring of "low leak" components.

Note: Numbers in parentheses indicate a negative control efficiency. Negative numbers are generated when the occurrence rate for the monitoring interval exceeds the initial leak frequency. Negative results are subject to interpretation and may not be meaningful (U.S. EPA, 1986, p. 4-7).

The ability to model the results of LDAR programs provided the means to examine alternative standards for valves. The LDAR Model was used to consider monthly LDAR programs for process units exhibiting low leak frequencies. With decreasing leak frequency, an associated decline occurs in the average emission factor and in emissions. Coupling this information with the costs of the LDAR program and analyzing resultant cost-effectiveness values led to the selection of 2 percent leaking as the performance limit. Consequently, process units with low leak rates (and low leak frequencies) were given a special provision in the NSPS for SOCMI fugitive VOC emissions (U.S. EPA, 1982).

1.2.3 Summary of Emission Reductions

Emission reductions for equipment leak control techniques can be extremely variable, particularly for work practices like leak detection and repair programs. In terms of standard-setting activities, criteria for selection of a given control technique or a particular level of control (e.g., monitoring interval of a leak detection and repair program) can be quite different. For example, the criterion used in establishing the best demonstrated technology (BDT) for NSPS might not necessarily be the best criterion for selecting the reasonably available control technology (RACT) presented in control techniques guidelines (CTG) documents used by states. In Table 1-2, CTG and NSPS levels of control are compared for VOC equipment leaks (fugitive emissions) for SOCMI; associated control effectiveness values also are presented (U.S. EPA, 1986, p. 4-6).

1.3 Handbook Organization

The focus of each handbook chapter is summarized below:

- Chapter 1 is a general introduction containing a discussion of emission control techniques, detailing the intent of the handbook, and describing the contents of each specific chapter.
- Addressed in Chapter 2 are existing regulatory requirements for fugitive VOC emissions. These include federal regulations such as the NSPS, NESHAP, and RCRA standards; certain state regulations such as the state implementation plan (SIP) revisions required by the Clean Air Act Amendments of 1977 and 1990; and the HON standards. NSPS regulations apply primarily to four source categories: SOCMI, petroleum refineries, onshore natural gas processing plants, and certain polymer manufacturing plants. NESHAP regulations apply to sources of benzene and vinyl chloride equipment leaks of volatile hazardous air pollutants (VHAPs).
- Outlined in Chapter 3 are the specific pieces of equipment covered by equipment leak standards. The equipment covered includes pumps, compressors, pressure relief devices, sampling connections, open

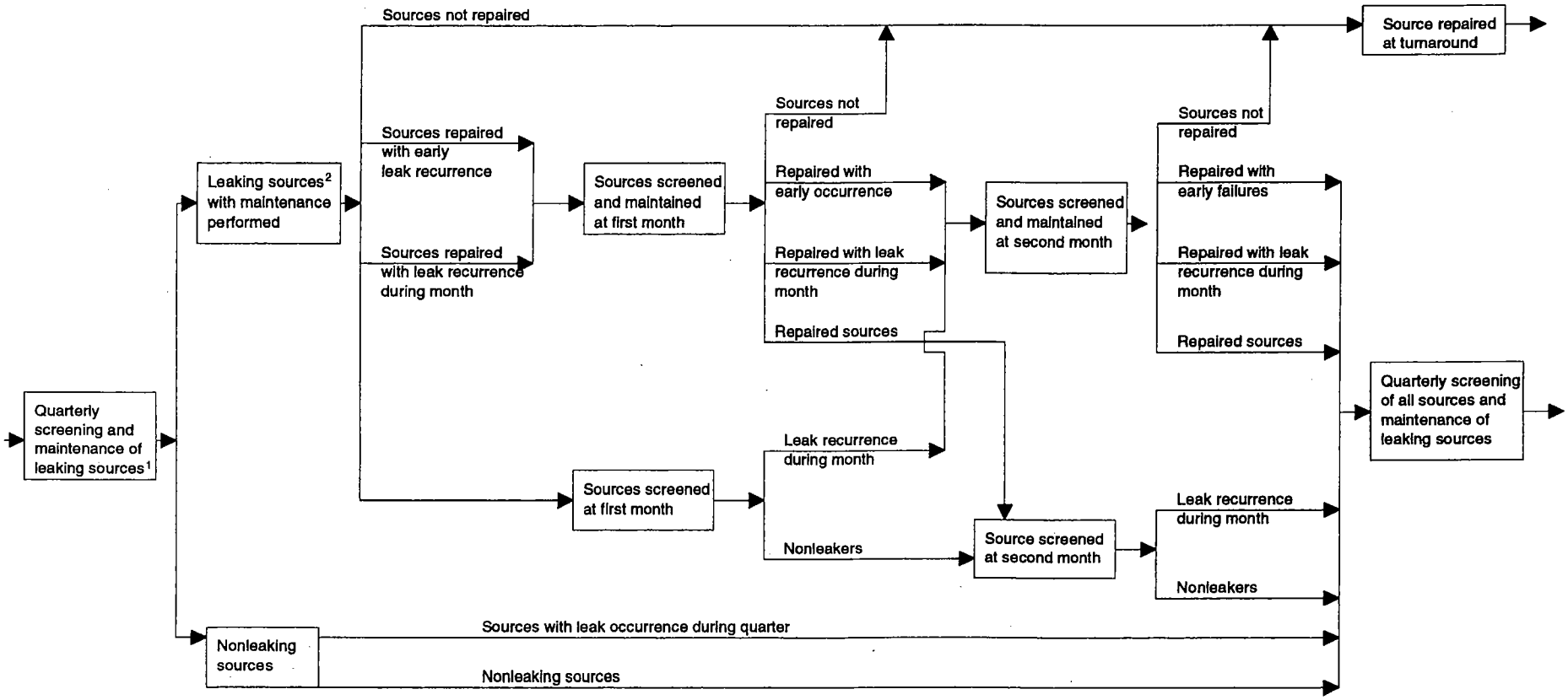

[1] Leaking sources include all sources that had leak occurrence, had experienced early failures, or had leak occurrence and remained leaking at the end of preceding quarter.

[2] Except source for which attempted maintenance was not successful.

Figure 1-1. LDAR model flow diagram.

Table 1-2. NSPS and CTG Control Levels* for SOCMI Fugitive Emissions (U.S. EPA, 1986, p. 4-8)

	Control Techniques Guidelines		New Source Performance Standards	
Source	Control Technique	Percent Reduction	Control Technique	Percent Reduction
Pumps, light liquid	Quarterly leak detection and repair	33	Monthly leak detection and repair	61
Valves, gas	Quarterly leak detection and repair	64	Monthly leak detection and repair	73
Light liquid	Quarterly leak detection and repair	44	Monthly leak detection and repair	59
Pressure relief valves, gas	Quarterly leak detection and repair	44	Rupture disk, soft seats (O-rings), vented to control device	100
Open-ended lines	Plugs, caps, blinds, etc.	100	Plugs, caps, blinds, etc.	100
Compressors	Quarterly leak detection and repair	33	Seal enclosed/vented to control device	100
Sampling connections	—	—	Closed purge sampling	100

* These and other control techniques are discussed in Chapter 3.

valves and open-ended lines, process valves, flanges/connectors, product accumulator vessels, agitators, and closed-vent systems and control devices.

- Described in Chapter 4 are the monitoring or screening requirements for the various equipment components. Protocols/methodologies for implementing and conducting monitoring programs are discussed. Also addressed are the selection of portable organic analyzers and various methods of data handling.
- Delineated in Chapter 5 are the recordkeeping and reporting requirements mandated by NSPS and NESHAP equipment leak standards. Methods for maintaining good records are discussed, and example report formats are provided.
- Presented in Chapter 6 are various techniques for organizing and maintaining the vast amounts of data generated by monitoring programs. Both manual and automated data management approaches are reviewed. Example data sheets and example reports also are provided.
- Chapter 7 contains information on certain engineering issues that should be considered when managing fugitive VOC emissions, including methods for developing emission estimates. Strategies suggested for estimating VOC emissions include applying EPA average emission factors, using a leak/no-leak approach, applying stratified emission factors, employing leak rate/screening value correlations, and using unit-specific correlations.

1.4 References

When an NTIS number is cited in a reference, that document is available from:

National Technical Information Service
5285 Port Royal Road
Springfield, VA 22161
703-487-4650

U.S. EPA. 1986. U.S. Environmental Protection Agency. Emission factors for equipment leaks of VOC and HAP. EPA/450/3-86/002. NTIS PB86-171527. Research Triangle Park, NC.

U.S. EPA. 1982. U.S. Environmental Protection Agency. Fugitive emission sources of organic compounds—additional information on emissions, emission reductions, and costs. EPA/450/3-82/010. NTIS PB82-217126. Research Triangle Park, NC.

U.S. EPA. 1980. U.S. Environmental Protection Agency. Problem-oriented report: Frequency of leak occurrence for fittings in synthetic organic chemical plant process units. EPA/600/2-81/003. NTIS PB81-141566. Research Triangle Park, NC.

Williamson, H.J., L.P. Provost, and J.I. Steinmetz. 1981. Model for evaluating the effects of leak detection and repair programs on fugitive emissions. Technical Note DCN 81-290-403-06-05-03. Radian Corporation, Austin, TX. September.

Chapter 2
Regulatory Requirements for Fugitive Emissions

2.1 Introduction

Equipment leak standards are designed to reduce or eliminate VOC or VHAP emissions from certain process equipment leaks. For example, seals designed to keep process fluids in pumps could fail, allowing VOC-containing process fluid to leak into the environment. Equipment leak standards specify certain monitoring and maintenance practices intended to reduce or eliminate these leaks and the resultant fugitive emissions.

VOCs, along with nitrogen oxides (NO_x) and ultraviolet radiation, contribute to ozone production. Ozone is one of the criteria pollutants for which a national ambient air quality standard (NAAQS) is designated under Section 109 of the Clean Air Act, and nonattainment of the ozone NAAQS is a serious problem in the United States. The formation of ozone can be abated by reducing the amount of VOCs and NO_x emitted and by reducing VOC and NO_x exposure to ultraviolet radiation.

Both federal and state regulations contain equipment leak standards for VOC emissions. Equipment leak standards for VHAP emissions are contained in federal regulations only. VOC emissions from stationary sources (process vents or stacks, and fugitive or equipment leaks) are regulated primarily under NSPSs, NESHAPs, and SIPs. SIPs generally provide the basis for state administration of federally mandated control programs and can modify federal standards. In addition, one source category (Hazardous Waste, Treatment, Storage, and Disposal Facilities) is regulated under RCRA.

Although they do support the achievement of ambient air quality goals, the primary goals of NSPSs are to minimize emissions at all new and modified sources, prevent the development of new pollution problems, and enhance air quality as the nation's industrial base is replaced. Equipment leak standards will limit VOC emissions from all new, modified, or reconstructed process units and will limit future emissions. Even though these reductions might not apply directly to attainment or nonattainment of the ozone NAAQS, they will enable continued industrial growth while preventing future air quality problems. NSPSs complement prevention of significant deterioration (PSD) and nonattainment rules as a means of achieving and maintaining the NAAQS; on a broader basis, NSPSs prevent new sources from exacerbating air pollution problems, regardless of the existing ambient air quality.

VHAPs are controlled because such air pollutants can pose a health risk for humans. Benzene and vinyl chloride, the two VHAPs regulated by equipment leak standards, are known human carcinogens. The proposed rule for HON emission standards greatly expands the scope of VHAP regulations. The proposed HON standards, which probably will be promulgated in 1994, are described in more detail later in this chapter.

Federal equipment leak standards were estimated to reduce VOC emissions between 55 and 68 percent from facilities affected by the standards. EPA has developed estimates of uncontrolled and controlled emissions from newly constructed, modified, and reconstructed source facilities. These estimates cover a 5-year period (typically from 1980 to 1985). For example, EPA estimated that approximately 830 newly constructed, modified, or reconstructed facilities affected by SOCMI equipment leak standards by 1985 would emit approximately 91,500 tons per year (tpy) of fugitive VOC emissions if left unregulated. After control, these 830 facilities were estimated to emit 40,700 tpy of fugitive VOCs from equipment leaks—a 56 percent reduction. Presented in Table 2-1 are EPA estimates of uncontrolled and controlled emissions from refineries, SOCMI plants, and facilities that use benzene (U.S. EPA, 1990a). The emission reduction percentage for petroleum refineries is approximately 63 percent and for benzene sources, 68 percent.

2.1.1 Federal Regulations

Federal regulations consist of NSPSs, NESHAPs, and standards under RCRA. NSPSs are implemented under Section 111 of the Clean Air Act and apply to newly constructed stationary sources—those sources constructed after the date that an NSPS is proposed in

Table 2-1. Effect of Equipment Leak Controls (U.S. EPA, 1990a)

Source Category	Nationwide Emissions (tpy)	
	Uncontrolled	After Control
Refineries*	53,900	19,800
SOCMI*	91,500	40,700
Benzene	8,700	2,750

* These estimates only include plants subject to the NSPS regulations.

the *Federal Register*. In addition, existing stationary sources (sources existing prior to the NSPS proposal date) can become subject to an NSPS if they are modified or reconstructed after the NSPS proposal date. A degree of national uniformity to air pollution standards is established through NSPSs. Such uniformity tends to preclude situations in which certain states could attract new industries as a result of relaxed standards, relative to other states.

NESHAPs, which are implemented under Section 112 of the Clean Air Act, apply to both new and existing stationary sources. NESHAPs are intended to control hazardous pollutants such as carcinogens or other serious disease-causing agents. Formerly, they were developed and implemented for individual pollutants, but this proved to be an extremely cumbersome and slow-moving process. By 1990, NESHAPs had been established for only eight pollutants. Of these, equipment leak regulations were applied only to benzene and vinyl chloride. The Clean Air Act Amendments of 1990 (CAAA) have changed the approach for controlling hazardous air pollutants. In the CAAA, 189 chemicals are identified as air toxics that will be controlled on a source category basis. A subset of the listed chemicals is being considered for regulation under the proposed HON standards (see discussion in Section 2.2.2.3 of this chapter).

As a class, organic air emissions at hazardous waste TSDFs are regulated under Subtitle C of RCRA. Final standards are established in the rule to limit leaks from equipment (e.g., pumps and valves) that contains or contacts hazardous waste streams with 10 percent or more total organics. The final standards incorporate, or closely follow, many of the provisions of the equipment leak NSPS and the benzene NESHAP. These standards are promulgated under authority of Section 3004 of the Hazardous and Solid Waste Amendments to RCRA and are incorporated into Parts 264 and 265 (Subpart BB), Air Emission Standards for Owners and Operators of Hazardous Waste Treatment, Storage, and Disposal Facilities (U.S. EPA, 1990b).

2.1.2 State Regulations

In addition to federal regulations, some states regulate equipment leaks of VOCs from existing stationary sources. States containing areas that fail to meet the NAAQS for ozone (nonattainment areas) are required to address VOC control by revising their SIPs. The Clean Air Act Amendments of 1977 and 1990 require SIPs for nonattainment areas to include RACT requirements for stationary sources.

Several states have regulations in place (or under development) for synthetic organic chemical and polymer manufacturing equipment, natural gas/gasoline processing plants, and petroleum refinery equipment (U.S. EPA, 1988). Some states also are regulating pumps/compressors and valves/flanges independently. A general overview of the role of states in adopting, modifying, and enforcing state VOC regulations is presented in Section 2.3 of this chapter.

2.2 Federally Regulated Source Categories

2.2.1 Sources Subject to NSPSs

As of June 1, 1992, the following four source categories are regulated by NSPSs for equipment leaks of VOCs:

- SOCMI
- Petroleum refineries
- Onshore natural gas processing plants
- Certain types of polymer manufacturing plants

The four NSPSs are found in 40 CFR Part 60, which contains federal regulations pertaining to the protection of the environment. Part 60 contains the standards of performance for new stationary sources, and specific regulations for new stationary sources are within various subparts, as follows:

- The SOCMI equipment leak standards are in Subpart VV of 40 CFR Part 60, and sections (§) of this standard are found in §60.480 through §60.489.
- The petroleum refinery equipment leak standards are in Subpart GGG, §60.590 through §60.593.
- The onshore natural gas processing plant equipment leak standards are in Subpart KKK, §60.630 through §60.636.
- Equipment leak standards for the polymer manufacturing industry are in Subpart DDD, §60.560 through §60.566.

As noted, NSPSs apply primarily to newly constructed sources and apply to existing sources only when they are modified or reconstructed. Consequently, the

NSPSs' applicability dates, which identify the standards' effective dates, distinguish between new and existing sources. (The applicability date is the date of proposal.) NSPSs become effective upon promulgation. Proposal and promulgation dates for NSPS regulations are presented in Table 2-2. Each regulation also exempts certain sources, equipment, or process units from the entire regulation or portions thereof; these exemptions are identified in the following section for each NSPS regulation and in Section 2.2.2 for sources subject to NESHAPs.

Table 2-2. NSPS Regulations—40 CFR Part 60

Regulation	Proposal Date	Promulgation Date
SOCMI—Subpart VV	1/5/81	10/18/83
Petroleum Refineries—Subpart GGG	1/4/83	5/30/84
Onshore Natural Gas Processing Plants—Subpart KKK	1/24/84	6/24/85
Polymer Manufacturing Plants—Subpart DDD	9/30/87	12/11/90

2.2.1.1 Synthetic Organic Chemicals Manufacturing Industry

SOCMI is a broad source category that covers plants that produce many types of organic chemicals (U.S. EPA, 1984a; 1982a,b; 1980). This industry segment generates products that are derived from about 10 basic petrochemical feedstocks and are used as feedstocks in a number of synthetic products industries. Examples of organic chemicals produced in the SOCMI segment are acetone, methyl methacrylate, toluene, and glycine. The complete list of organic chemicals covered by SOCMI equipment leak standards can be found in §60.489 of 40 CFR Part 60 (U.S. EPA, 1984b).

The SOCMI rule covers the industries that produce, as intermediates or final products, one or more of the chemicals listed in §60.489. The standards apply to any affected facility that commenced construction or modification after January 5, 1981. The SOCMI rule defines the affected facility as the "group of all equipment . . . within a process unit," and such equipment is covered if it is in VOC service (as defined in Section 2.2.4.1). The following exemptions are identified in the SOCMI rule:

- *Any affected facility that has the design capacity to produce less than 1,000 megagrams (Mg) (1,100 tons) per year is exempt from §60.482, which contains the specific requirements of the LDAR regulations.* Some process units (e.g., research and development facilities) have production rates so small that their VOC emissions from equipment leaks are likely to be very small. Consequently, the cost to control these emissions would be unreasonably high. This lower production rate cutoff was based on cost and emission reduction considerations. Explanation of the analysis is found in Section 5.7 of the background information document for the promulgated standards (U.S. EPA, 1980).
- *If an affected facility produces heavy liquid chemicals only from heavy liquid feed or raw materials, it is exempt from §60.482.* Based on data obtained in petroleum refinery studies, equipment processing VOCs with vapor pressures above 0.3 kPa (0.04 psi) leaked at significantly higher rates and frequencies than equipment processing VOCs with vapor pressure below 0.3 kPa. EPA elected, therefore, to exempt equipment processing lower vapor pressure VOC substances from the routine LDAR requirements of the standards (U.S. EPA, 1982b, p. 5-21). Even though the standards do not require monitoring equipment in heavy liquid service for leaks, the standards require VOC leaks from this equipment, detected visually or otherwise, to be repaired within 15 days if a leak is confirmed when using EPA Reference Method 21 (see Chapter 4 for more information on RM-21).
- *Any affected facility that produces beverage alcohol is exempt from §60.482.* During the public comment period on the proposed rule, EPA received comments from beverage alcohol producers saying that they should be exempt from coverage by the standards because beer and whisky producers were exempted from the priority list. EPA concluded that process units within beer and whisky plants that are producing fermented beverages solely for purposes of human consumption should be exempt from the standards. Any process unit in beer and whisky plants, however, that is used to manufacture nonbeverage fermented products (e.g., a distillation train to produce industrial grade alcohols from fermentation products) is subject to the standards (U.S. EPA, 1982b, p. 1-12).
- *Any affected facility that has no equipment in VOC service is exempt from §60.482.* EPA grants an exemption to any SOCMI unit that does not process VOCs. A few SOCMI process units might produce their products without the use of VOCs; however, these units are expected to be the exception rather than the rule.
- *Equipment in vacuum service is excluded from the requirements of §60.482-2 to 60.482-10 (the LDAR requirements) if a list of identification numbers for such equipment is recorded in a log that is kept in a*

readily accessible location (§60.486(e)(5)). EPA judges covering sources in vacuum service as inappropriate because sources operating even at a slight vacuum would have little, if any, potential to emit VOCs. "In vacuum service" means that equipment is operating with an internal pressure that is at least 5 kPa (0.7 psi) below ambient pressure.

In defining SOCMI-affected facilities, EPA considered selecting each equipment component (such as each pump and each valve). If this definition were selected, however, situations would arise in which replaced equipment components in existing process units would be subject to the standards while adjacent components would not be subject to the standards. With such a mixture of new and existing components, the effort to keep track of those equipment components covered by the standards and those not covered would be quite costly. Further, the cost of implementing an LDAR program for a very small portion of all the equipment components at a plant site would be very costly. For these reasons, this definition was rejected.

2.2.1.2 Petroleum Refineries

Subpart GGG of 40 CFR Part 60 applies to equipment leaks in petroleum refineries (U.S. EPA, 1982c, 1978). The standards in this subpart apply to any affected facility that commenced construction or modification after January 4, 1983.

Petroleum refineries are defined in the applicable equipment leak standard as:

> . . . (facilities) engaged in producing gasoline, kerosene, distillate fuel oils, residual oils, lubricants, or other products through the distillation of petroleum or through the re-distillation, cracking, or reforming of unfinished petroleum derivatives.

This NSPS specifies that affected facilities covered by the equipment leak standards for the SOCMI (Subpart VV), or for onshore natural gas processing plants (Subpart KKK), are excluded from these standards. Some refineries, for example, produce organic chemicals on the SOCMI list. Because these refineries have sources of fugitive VOC emissions (such as pumps and valves) involved in producing one or more SOCMI chemicals, EPA believes that the SOCMI standards are applied appropriately to process units in these refineries. To eliminate potential redundancy or confusion, therefore, process units covered under SOCMI standards are exempted from refinery standards. For this NSPS, affected facilities include each compressor and the group of all the equipment (defined in §60.591) within a process unit.

Relatively few compressors are located in petroleum refineries; in fact, many process units do not contain compressors. A compressor in a process unit is designed for use only within that specific process unit. In general, petroleum refineries have no spare compressors, and compressors that are in place are readily identifiable. Thus, keeping track of compressors covered by the standards would not be too expensive. Based on these considerations, EPA elected to define each compressor as an affected facility. (For all other equipment, the process unit is the affected facility.)

The petroleum refinery NSPS allows owners or operators to define equipment as "in light liquid service" if "the percent evaporated is greater than 10 percent at 150°C, as determined by American Society for Testing and Materials (ASTM) Method D-86." This NSPS also contains several exemptions (§60.593), including:

- *Compressors in hydrogen service are exempted from §60.592.* EPA's analysis of the cost of controlling compressors in hydrogen service showed that emission reductions from such compressors could not be achieved at a reasonable cost. Thus, EPA decided to exclude such compressors from the standards.
- *Also exempt from §60.482-2 and §60.482-7 are pumps in light liquid service and valves in gas/vapor service and light liquid service within a process unit that is located in the Alaskan North Slope.* Refineries located in the Alaskan North Slope are exempt from the routine LDAR requirements, but are not exempt from the equipment requirements of the standards.

2.2.1.3 Onshore Natural Gas Processing Plants

Subpart KKK of 40 CFR Part 60 applies to equipment leaks in equipment that is located at onshore natural gas processing plants (U.S. EPA, 1983a,b). The standards apply to any affected facility that commences construction, reconstruction, or modification after January 20, 1984. Natural gas processing plants are defined as ". . . processing (sites) engaged in the extraction of natural gas liquids from field gas, fractionation of mixed natural gas liquids to natural gas products, or both." Facilities covered by SOCMI or petroleum refinery equipment leak standards (Subparts VV and GGG, respectively) are excluded from Subpart KKK.

This NSPS identifies two types of affected petroleum refinery facilities: 1) each compressor in VOC service or in wet gas service, and 2) the group of all equipment (except compressors defined in §60.631) within a process unit. Subpart KKK specifically includes any compressor station, dehydration unit, sweetening unit, underground storage tank, field gas gathering system, or liquefied natural gas unit if it is located at an onshore natural gas processing plant.

When proposing Subpart KKK, EPA defined "in VOC service" using a 1.0 weight percent VOC limit (rather than 10 weight percent). The 1.0 weight percent VOC limit was chosen to ensure that inlet (wet) gas streams were subject to NSPS controls, since emissions can be reduced at reasonable costs from inlet gases. Based on comments received on the proposed standards, however, EPA agreed that a 1.0 weight percent limit was inappropriate for dry gas streams. EPA selected a VOC concentration limit of 10 weight percent in the final rule for the "in VOC service" definition and decided to include equipment in wet gas service (except for wet gas reciprocating compressors) by covering it as a class. "In wet gas service" means that a piece of equipment contains or contacts the field gas before the extraction step.

The onshore natural gas process plant NSPS allows owner/operators to use alternative definitions for "in heavy liquid service" and "in light liquid service." An owner or operator may define equipment as in heavy liquid service if the weight percent evaporated is 10 percent or less at 150°C, as determined by ASTM Method D-86. An owner or operator may define equipment as in light liquid service if the weight percent evaporated is greater than 10 percent at 150°C, as determined by ASTM Method D-86.

This NSPS generally requires owners and operators to follow the provisions found in 40 CFR Part 60, Subpart VV (Equipment Leaks for the SOCMI), with exceptions as follows:

- *Sampling connection systems are exempt from §60.482-5.*
- *Pumps in light liquid service, valves in gas/vapor service and in light liquid service, and pressure relief devices in gas/vapor service that are located at a nonfractionating plant with a design capacity to process <10 million standard cubic feet per day (scfd) of field gas are exempt from the routine monitoring requirements of §60.482-2(a)(1), §60.482-7(a), and §60.633(b)(1).* Small, nonfractionating plants often operate unmanned or are operated by personnel lacking the necessary ability to carry out a responsible LDAR program. In these cases, central office personnel or an outside consultant would be required to conduct LDAR. EPA examined the additional costs that would be incurred in such cases and the amount of resultant emissions reductions and judged the costs to change from reasonable to unreasonable at plants with capacities between 5 and 10 million scfd. Therefore, EPA decided to exempt any nonfractionating plant with a design capacity of <10 million scfd of field gas from the routine monitoring requirements for valves, pumps, and pressure relief devices. Nevertheless, all fractionating plants, regardless of capacity, are required to implement the routine monitoring requirements.
- *Pumps in light liquid service, valves in gas/vapor service and in light liquid service, and pressure relief devices in gas/vapor service within a process unit located in the Alaskan North Slope are exempt from the routine monitoring requirements of §60.482-2(a)(1), §60.482-7(a), and §60.633(b)(1).* EPA reviewed comments on natural gas plant operations in the North Slope of Alaska and determined that the costs to comply with certain aspects of the proposed standards would be unreasonable. LDAR programs incur higher labor, administrative, and support costs at plants that are located at great distances from major population centers and particularly those that experience extremely low temperatures, as in the Arctic. Thus, EPA decided to exempt plants located in the North Slope of Alaska from routine LDAR requirements. EPA excluded these plants from only the routine LDAR requirements; the costs of the other requirements were determined by EPA to be reasonable and, therefore, the requirements still apply.
- *Reciprocating compressors in wet gas service are exempt from the compressor control requirements of §60.482-3.* When proposing Subpart KKK, EPA exempted reciprocating compressors in wet gas service only if they were located at a gas plant that did not have an existing control device. The cost effectiveness of installing and operating a control device for such compressors was high. The cost effectiveness of controlling wet gas reciprocating compressors at plants with an existing control device ($1,700/Mg of VOC reduced) was considered reasonable, however, given that the average cost effectiveness (combining cost-effectiveness numbers for centrifugal and reciprocating compressors) was estimated to be much lower ($460/Mg). Since proposal of Subpart KKK, however, several industry representatives commented that many gas plants, especially small ones, will use reciprocating compressors almost exclusively. For such plants, the compressor control cost effectiveness would be essentially the same as the cost effectiveness for controlling only wet gas reciprocating compressors at plants with an existing control device (i.e., $1,700/Mg). This cost effectiveness, when considered representative of the overall compressor control costs for small plants, was judged by EPA to be unreasonably high, so EPA revised the standards to exempt all wet gas reciprocating compressors. Reciprocating compressors used in natural gas liquids (NGL) service and all centrifugal compressors in wet gas or NGL service, however, still are required to be

equipped with closed-vent systems because they can be controlled at a reasonable cost effectiveness.

2.2.1.4 Polymer Manufacturing Plants

Both process and fugitive emissions from the polymer manufacturing industry are regulated under Subpart DDD of 40 CFR Part 60 (55 FR 51035; U.S. EPA, 1984a). Equipment leak standards for VOCs have been established for those polymer manufacturing plants that produce polypropylene, polyethylene, polystyrene (crystal, impact, and expandable), and copolymers of these three major polymer types. Equipment leaks from polyethylene terephthalate manufacturing processes are not covered under these standards. Any affected facility with a design capacity to produce less than 1,000 Mg/yr also is exempt. The applicability date for meeting equipment leak standards is September 30, 1987 (U.S. EPA, 1990c).

For this NSPS, affected facilities are each group of fugitive emissions equipment (as defined in §60.561) within any process unit (as defined in §60.561). Fugitive emissions equipment includes each pump, compressor, pressure relief device, sampling connection system, open-ended valve or line, valve, and flange or other connector in VOC service. A process unit is the group of equipment assembled to perform any of the physical and chemical operations in the production of polypropylene, polyethylene, polystyrene, or one of their copolymers. A process unit can operate independently if supplied with sufficient feed or raw materials and sufficient storage facilities for the product. Raw materials handling and monomer recovery are examples of process units.

The equipment leak standards for polymer manufacturing facilities incorporate most of the SOCMI requirements for equipment leaks of VOCs, as presented in Subpart VV. A limited exemption from the equipment leak standards applies to pumps in light liquid service that utilize a "bleed port" (wherein polymer fluid is used to provide lubrication and/or cooling of the pump shaft and, consequently, exits the pump), resulting in a visible leak of fluid. This exemption expires, however, when the existing pump is replaced or reconstructed. Also, as with petroleum refineries and natural gas processing plants, affected facilities under this standard may define equipment as "in light liquid service" if the percent evaporated is greater than 10 percent at 150°C, as determined by ASTM Method D-86.

2.2.2 Sources Subject to NESHAP Regulations

NESHAP standards have been established for equipment leaks of two designated VHAPs—benzene and vinyl chloride. In addition, the proposed HON standards for a designated class of VHAPs will apply to a specified group of production processes.

The NESHAP standards are found in 40 CFR Part 61. Part 61 contains the national emission standards for hazardous air pollutants, including the following subparts:

- Subpart V contains the national emission standard for VHAP equipment leaks. This subpart contains generic provisions and standards that apply to benzene and vinyl chloride sources, as incorporated by reference in the two subparts of 40 CFR Part 61 that specifically apply to these two pollutants. This subpart was added to the regulations on June 6, 1984.
- Subpart J specifies the national emission standard for equipment leaks of benzene and basically incorporates Subpart V as its standards. Subpart J was added at the same time as Subpart V (June 6, 1984). Subpart J is found in §61.110 through §61.112.
- Subpart F contains various standards for vinyl chloride, in addition to equipment leak standards (§61.60 through §61.71). Equipment leak standards are found in §61.65(b). The vinyl chloride standards were promulgated in 1976. At that time, some fugitive emission sources were covered. At a later date, §61.65 was revised to incorporate the standards found in Subpart V. The most recent addition was made on July 10, 1990.

The announcement of negotiated regulations for equipment leaks of hazardous organics was published in the *Federal Register* (56 FR 9315) on March 6, 1991. These negotiated regulations are to be incorporated as part of the HON emission standards, which were proposed on December 31, 1992. In addition to equipment leaks, HON standards will cover storage, transfer, process vents, and wastewater emissions at chemical plants.

2.2.2.1 Benzene

The national emission standards for equipment leaks of benzene apply to pumps, compressors, pressure relief devices, sampling connection systems, open-ended valves or lines, valves, and flanges and other connectors that are intended to operate in benzene service (U.S. EPA, 1982d). Unlike NSPSs, these standards apply to both new and existing sources, and no initial applicability date separates new from existing sources.

"In benzene service" means that a piece of equipment either contains or contacts a fluid (liquid or gas) that is at least 10 percent benzene by weight, as determined according to the provisions of §61.245(d). Methods for determining that a piece of equipment is not in benzene service also are specified in §61.245(d).

The benzene equipment leak NESHAP contains the following exemptions:

- *Any equipment in benzene service that is located at a plant site designed to produce or use less than 1,000 Mg of benzene per year is exempt from the requirements of §61.112. (The generic equipment leak standards for hazardous air pollution sources that are contained in 40 CFR Part 61, Subpart V, are invoked by requirements in this section.)* Commentors on the proposed standards requested exemption for certain small-volume or intermittent benzene uses. Because EPA exempts plants from the standard when the cost of the standard is unreasonably high in comparison to the achieved emission reduction, EPA determined a cutoff for exempting plants based on a cost and emission reduction analysis. Based on this analysis, EPA determined that the cost of complying with the standard is unreasonable for plants in which the benzene emission reduction is about 4 Mg/yr. To exclude plants on this basis, EPA selected a minimum cutoff of 1,000 Mg/yr per plant site based on a benzene design usage rate or throughput. This cutoff is expected to exempt most research and development facilities and other small-scale operations. For plants with a benzene design usage rate greater than 1,000 Mg/yr, EPA determined that the cost of the standard is reasonable.
- *Any process unit that has no equipment in benzene service is exempt from the requirements of §61.112.*
- *Sources located at coke by-product plants are exempt from the standard.*
- *Equipment that is in vacuum service is excluded from the requirements of §61.242-2 to §61.242-11 if it is identified as required in §61.246(e)(5) as being in vacuum service.*

2.2.2.2 Vinyl Chloride

Subpart F of 40 CFR Part 61, the vinyl chloride standards, affects plants that produce ethylene dichloride, vinyl chloride, and one or more polymers containing any fraction of polymerized vinyl chloride (U.S. EPA, 1982e). On January 9, 1985, EPA proposed to add vinyl chloride to the list of substances covered by Subpart V, the national emission standard for equipment leaks (fugitive emission sources), of 40 CFR Part 61. This standard was promulgated on September 30, 1986.

Subjecting facilities already controlled by Subpart F to Subpart V substantively affected only valves and flanges in vinyl chloride service; all other equipment in vinyl chloride service already was required by Subpart F to comply with equipment and work practice standards consistent with those in Subpart V. The primary effect was to require a specific monitoring schedule, leak definition, and repair provisions for valves and flanges in vinyl chloride service.

Subpart F contains several exemptions affecting equipment subject to the fugitive emission standards:

- Subpart F does not apply to equipment used in research and development if the reactor used to polymerize the vinyl chloride processed in the equipment has a capacity of less than 0.19 m^3 (50 gallons).
- Equipment used in research and development is exempted from some of Subpart F if the reactor used to polymerize the vinyl chloride processed in the equipment has a capacity of greater than 0.19 m^3 (50 gallons) and less than 4.07 m^3 (1,075 gallons). This includes exemption from §61.65, which contains the standards for fugitive emission sources.

  Sections of Subpart F that remain applicable are:

  - §61.61—definitions.
  - §61.64(a)(1), (b), (c), and (d)—some of the standards for polyvinyl chloride plant reactors, strippers, mixing, weighing and holding containers, and monomer recovery systems.
  - §61.67—emission test requirements.
  - §61.68—emission monitoring requirements.
  - §61.69—initial report requirements.
  - §61.70—reporting requirements.
  - §61.71—recordkeeping requirements.
- Equipment in vacuum service is exempt.
- Any process unit in which the percentage of leaking valves is demonstrated to be less than 2.0 percent is exempt from the following sections of Subpart V (40 CFR Part 61):

  - §61.242-1(d)—requiring each piece of equipment to be marked in such a manner that it can be readily distinguished from other pieces of equipment.
  - §61.242-7(a), (b), and (c)—standards for valves, covering monitoring period and method to be used, leak definition, and skip period.
  - §61.246—recordkeeping requirements.
  - §61.247—reporting requirements.

Such process units are still subject to the reporting and recordkeeping requirements found specifically in Subpart F.

2.2.2.3 Hazardous Organic National Emission Standards

The HON standards will apply to a number of emission points and to equipment leaks at organic chemical plants. As noted in Section 2.2.2, the portion of the proposed rule that addresses equipment leaks was developed through a negotiated rulemaking process and was published in the *Federal Register* on March 6, 1991 (56 FR 9315).

Based on the notice published in the March 6, 1991, *Federal Register*, the equipment leak rules will apply to a group of 453 organic chemical manufacturing processes. They also will apply to some additional processes that produce certain butadiene-, chlorine-, or styrene-based products. A complete list of affected processes is presented in Appendix A. A total of 149 chemicals or chemical groups are defined as VHAPs under this rule (see Appendix B).

A number of the manufacturing processes listed under the HON standards also contain equipment subject to NSPS or NESHAP equipment leak standards. Wherever such overlapping rules apply, HON standards will take precedence. Petroleum refining processes, however, are not covered by the HON standards, and a separate ruling will be developed for these processes.

The HON standards for equipment leaks, as currently considered, will expand the number of regulated facilities significantly. In addition, changes in the definitions of affected equipment and leak thresholds are introduced in the proposed standards; these proposed changes probably will expand the range of components subject to regulation at affected facilities. Since these standards have been proposed only, changes introduced by the expected HON standards are not addressed in this handbook. The owner/operator of any facility subject to equipment leak standards first should determine whether the HON standards are applicable to his or her facility before using any current NSPS or NESHAP guidance or reference standards.

2.2.3 Types of Standards

The regulations for equipment leaks incorporate three different types of standards: 1) performance standards, 2) equipment standards, and 3) work practice standards. For most equipment, more than one type of standard is applicable.

As defined in the Clean Air Act, a "standard of performance" refers to an allowable emission limit (e.g., a limit on the quantity of a pollutant emitted over a specified time period or a percent reduction). For most sources of equipment leaks, EPA determined that performance standards are not feasible, except in those cases in which the performance standard can be set at "no detectable emissions" or the process permits installation of certain control devices. The only way to measure emissions from most equipment leak sources, such as pumps, pipeline valves, and compressors, would be to use a bagging technique for each component in a process unit. EPA determined that the large number of components and their dispersion over large areas would make such a requirement economically impracticable (U.S. EPA, 1980).

Because performance standards were not possible for all types of equipment, alternative standards also were promulgated. Such alternatives include equipment standards (use, design, operation) and work standards, or some combination thereof. The equipment leak standards contain all of these alternatives.

2.2.3.1 Performance Standards

Two standards of performance are included in the current equipment leak standards. The first standard is "no detectable emissions," which generally applies to pumps, compressors, pressure relief devices in gas/vapor service, closed-vent systems, and valves (specifically designated for no detectable emissions). A source is demonstrated to be operating with no detectable emissions if a reading of less than 500 ppmv above background is indicated by a portable VOC-measuring instrument. The second standard of performance is a reduction efficiency of 95 percent, which applies to several types of control devices. Vapor recovery systems (e.g., condensers and adsorbers) are to have control efficiencies of at least 95 percent. This standard of performance (95 percent reduction) also is applicable to enclosed combustion devices.

2.2.3.2 Equipment Standards

Equipment standards specify the use, design, or operation of a particular piece of equipment. A component is in compliance with use standards when the piece of equipment is used in a specified manner. For example, open-ended lines or open valves are to be equipped with a cap, blind flange, plug, or second valve. Thus, an open-ended line that is capped is in compliance with the standard.

Design standards regulate equipment design. For example, enclosed combustion devices must meet certain design specifications related to minimum residence times and temperatures. Equipment design specifications also apply to certain pumps and compressors, sampling connectors, product accumulator vessels, flares, and other types of equipment.

Operational standards regulate equipment operation. If the equipment is operated in the specified manner, then it is in compliance with the regulations. For example, each open-ended line or open valve that is equipped

with a second valve is to be operated in a manner such that the valve on the process fluid end is closed before the second valve is closed. If the open-ended valve or line is operated in this manner, then it is in compliance with the standard.

2.2.3.3 Work Practice Standards

Work practice standards pertain primarily to LDAR programs implemented by federal regulations. LDAR programs rely on the monitoring of various components at regular intervals to determine whether they are leaking. If they are leaking, then the repair part of the LDAR program is instituted. Pumps and valves are covered by LDAR programs.

The regulations also require certain components to be monitored to determine "evidence of a leak." This requirement covers pumps and valves in heavy liquid service, pressure relief devices in liquid service, and flanges and other connectors.

2.2.4 The Standards in Detail

Addressed in the following discussion are the NSPSs for SOCMI, petroleum refining, natural gas processing, and polymer manufacturing source categories and the NESHAPs for benzene and vinyl chloride sources. Specific distinctions between the regulations (or groups within regulations) are noted. Readers also should refer to discussions under Sections 2.2.1 and 2.2.2 for information about specific source categories.

2.2.4.1 Definitions

Various terms that are used frequently in the standards are defined, primarily in §60.481 and §61.241. Other standards might have different definitions or might supplement the ones in these two sections. The definitions reviewed here are presented to help clarify how the standards are applied.

Affected Facility

An affected facility is an emission source or group of emission sources to which a standard applies. The "affected facility" definitions for the four NSPS equipment leak standards are shown in Table 2-3. For NESHAP equipment leak standards, each individual piece of equipment (e.g., pump, compressor) is the affected facility.

Process Unit

All of the standards contain the following generic definition: "a process unit can operate independently if supplied with sufficient storage facilities for the product." Each standard also contains specific qualifiers (see Table 2-4).

Table 2-3. NSPS Equipment Leak Standards—Affected Facility Definitions

Standard	Affected Facility*
SOCMI	The group of all equipment within a process unit
Petroleum refineries	Each compressor
	The group of all equipment within a process unit
Onshore natural gas processing plants	A compressor in VOC service or in wet gas service
	The group of all equipment except compressors within a process unit
Polymer manufacturing plants	The group of all equipment within a process unit

* See Section 2.2.1.1 for a more complete discussion of affected facilities.

Table 2-4. Process Unit Definitions—Specific Qualifiers

Standard	Specific Process Unit Definition
SOCMI	Components assembled to produce, as intermediate or final products, one or more of the chemicals listed in §60.489 of Subpart VV.
Petroleum refineries	Components assembled to produce intermediate or final products from petroleum, unfinished petroleum derivatives, or other intermediates.
Onshore natural gas processing plants	Equipment assembled for the extraction of natural gas liquids from field gas, the fractionation of liquids into natural gas products, or other operations associated with the processing of natural gas products.
Polymer manufacturing plants	Equipment assembled to perform any of the physical and chemical operations in the production of polypropylene, polyethylene, polystyrene (general purpose, crystal, or expandable), or poly(ethylene terephthalate) or one of their copolymers.
NESHAP (benzene and vinyl chloride)	Equipment assembled to produce VHAP or its derivatives as intermediates or final products, or equipment assembled to use a VHAP in the production of a product.

Note: Under all of the standards, a process unit can operate independently if supplied with sufficient feed or raw materials and sufficient storage facilities for the product.

EPA clarifies the definition of process unit for the SOCMI standards, as follows:

> The definition was drafted by EPA to provide a practical way to determine which equipment is included in an affected facility. There are no specific physical boundaries or size criteria. The definition instead depends upon several operational factors,

including chemical produced and the configuration of the processing equipment. Such configurations may be different for different producers of the same chemical; therefore, the definition may be fairly site specific. In practice, however, the definition will implement the selection of a process unit basis as the "source" covered by the standards (U.S. EPA, 1980).

Equipment

Equipment definitions are given in each of these standards (see Table 2-5). Different definitions of equipment are needed to cover the different ways to identify compressors as separate affected facilities in the petroleum refinery and onshore natural gas processing plant standards and to cover the exemption of sampling connection systems in onshore natural gas processing plants from the equipment leak standards.

Leak Definitions

Each standard contains the same leak definitions. For pumps, a leak is detected if 1) a portable VOC instrument reading of ≥10,000 ppmv is measured, or 2) indications of liquid dripping from the pump seal are observed.[1] For compressors, a leak is detected if the sensor indicates failure of the seal system, the barrier system, or both. (The standards require each barrier fluid system to be equipped with a sensor that will detect such system failures.) For valves in gas/vapor service, light liquid service, or VHAP service, a leak is detected if an instrument reading of ≥10,000 ppmv is measured. For pumps and valves in heavy liquid service, pressure relief devices in liquid service, and flanges and other connectors, a leak is detected if an instrument reading of ≥10,000 ppmv is measured.

The HON rule is expected to phase in stricter leak definitions for pumps and valves. For most pumps in light liquid service, the leak definition is expected to be reduced from 10,000 ppmv to 1,000 ppmv within 2½ years following the date of the applicable rule. For valves in gas/vapor or light liquid service, leaks ultimately are expected to be defined as 500 ppmv.

Table 2-5. Equipment Definitions

Standard	Equipment Definition
SOCMI	Each pump, compressor, pressure relief device, sampling connection system, open-ended valve or line, valve, and flange or other connector in VOC service and any devices or systems required by this subpart.*
Petroleum refineries	Each valve, pump, pressure relief device, sampling connection system, open-ended valve or line, and flange or other connector in VOC service. For the purposes of recordkeeping and reporting only, compressors are considered equipment.
Polymer manufacturing plants	Each pump, compressor, pressure relief device, sampling connection system, open-ended valve or line, valve, and flange or other connector in VOC service and any devices or systems required by this subpart.*
Onshore natural gas processing plants	Each pump, pressure relief device, open-ended valve or line, valve, compressor, and flange in VOC service or in wet gas service, and any devices or systems required by this subpart.*
NESHAP (benzene and vinyl chloride)	Each pump, compressor, pressure relief device, sampling connection system, open-ended valve or line, valve, flange or other connector, product accumulator vessel in VHAP service, and any control devices or systems required by this subpart.*

* This phrase refers to devices or systems, such as alarms or dual mechanical seals, that might be required to satisfy performance or equipment standards. See Section 2.2.4.3.

In VOC Service

The NSPS equipment leak standards apply to components that are "in VOC service." The definition contained in the SOCMI equipment leak standard is "any piece of equipment which contains or contacts a process fluid that is at least 10 percent VOC by weight." This definition also is referenced in the petroleum refinery, onshore natural gas processing, and polymer manufacturing equipment leak standards. The 10 percent VOC cutoff was selected by EPA to avoid covering those sources that have only small amounts of ozone forming substances in the equipment (U.S. EPA, 1980).

The NSPS equipment leak standards differ depending on whether the equipment in VOC service is in "gas/vapor service," "light liquid service," or "heavy liquid service." While all of the NSPSs use the same definition for in light liquid service and in heavy liquid service, the onshore natural gas processing plant standard provides alternative definitions for both light and heavy liquid service. The petroleum refinery and vinyl chloride standards also provide an alternative definition for in light liquid service.

In VHAP Service

The NESHAP equipment leak standards apply to VHAPs. A VHAP is defined in 40 CFR Part 61, Subpart V as ". . . a substance regulated under this part for which a standard for equipment leaks of the substance has been proposed and promulgated." Under the

[1] Note the limited exception to this rule (§60.562-2) applicable to certain pumps used in the polymer manufacturing industry. This exemption is discussed in Section 2.2.1.4.

proposed HON for organic chemical manufacturing facilities, 149 substances will be defined as VHAPs.

"In VHAP service" means that a piece of equipment either contains or contacts a fluid (liquid or gas) that is at least 10 percent by weight a VHAP. This is the same basic definition for "in benzene service" found in the benzene equipment leak standard (40 CFR Part 61, Subpart J).

For vinyl chloride, "in vinyl chloride service" means that a piece of equipment either contains or contacts a liquid that is at least 10 percent vinyl chloride by weight or a gas that is at least 10 percent vinyl chloride by volume. This definition, rather than the "in VHAP service" definition found in Subpart V, is used in the vinyl chloride standards (40 CFR Part 61, Subpart F) for determining the applicability of Subpart F.

In Gas/Vapor Service

"In gas/vapor service" means that the piece of equipment contains process fluid that is in the gaseous state at operating conditions. Each of the four NSPS standards uses this definition. Subpart V defines "in gas/vapor service" the same as it defines the NSPS equipment leak standards.

In Light Liquid Service

Equipment is "in light liquid service" if both of the following conditions apply:

- The vapor pressure of one or more components is >0.3 kPa (0.04 psi) at 20°C.
- The total concentration of the pure components, with a vapor pressure >0.3 kPa (0.04 psi) at 20°C, is ≥20 percent by weight, and the fluid is a liquid at operating conditions.

In addition to the above definition, the petroleum refinery, onshore natural gas processing, and polymer manufacturing plant standards allow an owner or operator to define equipment as in light liquid service if the percent evaporated is greater than 10 percent at 150°C, as determined by ASTM Method D-86.

In Heavy Liquid Service

"In heavy liquid service" means that the piece of equipment is neither in gas/vapor service nor in light liquid service. The onshore natural gas processing plant standard also defines equipment as in heavy liquid service if the weight percent evaporated is ≤10 percent at 150°C, as determined by ASTM Method D-86. Although not explicitly stated in the petroleum refinery standard, this alternative definition also can be used for equipment located at petroleum refineries.

In Liquid Service

Subpart V defines "in liquid service" rather than differentiating between "in light liquid service" and "in heavy liquid service." In liquid service means that a piece of equipment is not in gas/vapor service.

While these definitions are incorporated by reference in Subpart J (benzene), Subpart F (vinyl chloride) does not differentiate between in gas/vapor service and in liquid service. Components "in vinyl chloride service" are covered in the same manner regardless of the fluid state.

Connectors and Flanges

Flanges and other connectors are one group of equipment components covered by the equipment leak standards. In 40 CFR Part 60, Subpart VV, connectors are defined as "flanged, screwed, welded, or other joined fittings used to connect two pipe lines or a pipe line and a piece of process equipment."

In Subpart V (40 CFR Part 61), this definition (applicable only to equipment in VHAP service) is expanded by the following statement, added on September 30, 1986 (51 FR 34915): "For the purpose of reporting and recordkeeping, connector means flanged fittings that are not covered by insulation or other materials that prevent location of the fittings."

Product Accumulator Vessels

A "product accumulator vessel" is any distillate receiver, bottoms receiver, surge control vessel, or product separator in VHAP service that is vented to the atmosphere either directly or through a vacuum-producing system. A product accumulator vessel is in VHAP service if the liquid or the vapor in the vessel is at least 10 percent by weight a VHAP.

Only Subpart V, Part 61 defines product accumulator vessel, and only Subpart J, Part 61 regulates product accumulator vessels. A number of questions have been raised by the regulated industry about the application of this definition, and some clarification is presented in Section 3.8 of this handbook.

2.2.4.2 Leak Detection and Repair

LDAR programs consist of two phases: 1) monitoring potential fugitive emission sources within a process unit to detect VOC leaks, and 2) repair or replacement of the leaking component. The level of emission reduction achieved by an LDAR program is affected by several factors. The three main factors are monitoring interval, leak definition, and repair interval:

- *Monitoring interval*—The monitoring interval is the frequency at which individual component monitoring

is conducted. Pumps and valves are to be monitored once a month. For valves, the monitoring interval may be extended to once every quarter for each valve that has not leaked for 2 successive months. For pumps, the LDAR program also specifies a weekly visual inspection for indications of liquids dripping from the pump seal.

- *Leak definition*—The leak definition is the specified VOC (or VHAP) concentration observed during monitoring that defines leaking sources. Two primary factors affect the selection of the leak definition: 1) the percent total mass emissions that potentially can be controlled by the LDAR program, and 2) the ability to repair the leaking components. Under current standards, the leak definition employed for leak detection monitoring is 10,000 ppmv.
- *Repair interval*—The repair interval is defined as the length of time allowed between detection of a leak and repair of the leak. When a leak is detected, the affected component is required to be repaired as soon as practicable, but not later than 15 calendar days after the leak is detected, unless the conditions described under "Delay of Repair" (later in this section) are met.
- For each component, the first attempt at repair is to be made no later than 5 calendar days after each leak is detected. For valves, first attempts at repair include, but are not limited to, the following best practices, where practicable:
  - Tightening of bonnet bolts
  - Replacement of bonnet bolts
  - Tightening of packing gland nuts
  - Injection of lubricant into lubricated packing

  The standards do not identify similar first attempt repair practices for the other components.

  Other factors could improve the efficiency of an LDAR program, but are not addressed by the standards. These factors include training programs for equipment monitoring personnel and tracking systems that address the cost efficiency of alternative equipment (i.e., competing brands of valves in a specific application).

LDAR programs affect valves and pumps and other components. Each of these components will be discussed in greater detail in the following sections.

Valve LDAR Programs

Four categories of valves to which monitoring requirements apply are listed in 40 CFR Part 60, Subpart VV:

- Valves in gas/vapor or light liquid service
- Valves demonstrated to be difficult-to-monitor
- Valves demonstrated to be unsafe-to-monitor
- Valves in heavy liquid service

For valves covered by the NESHAP standards (40 CFR Part 61, Subpart V), only three valve categories are equivalent to the first three categories listed above for NSPS standards. The only difference is that the first category for NESHAPs does not distinguish between gas/vapor and light liquid service; it is simply "in VHAP service."

Valve LDAR programs are discussed in the following section for each of the first three categories. After one year of monitoring is completed, alternative standards are available for valves in gas/vapor, light liquid, or VHAP service. A discussion of valves in heavy liquid service is presented in the section called "Other Equipment LDAR Programs."

Valves in Gas/Vapor or Light Liquid Service and Valves in VHAP Service. Monthly monitoring is required for valves in gas/vapor or light liquid service and valves in VHAP service. In selecting the monitoring interval, EPA noted that, in general: ". . . more frequent monitoring would result in greater emissions reductions because more frequent monitoring would allow leaks to be detected earlier, thus allowing more immediate repair."

EPA considered monitoring intervals of less than 1 month for these valves, but noted that the large number of valves in certain SOCMI process units limits the practical minimum for the monitoring intervals. For typical large process units, a two-person team could take more than 1 week to monitor all the valves. Since some time is required to schedule repair after a leak is detected, monitoring intervals of less than 1 month could result in a situation in which a detected leak could not be repaired before the next required monitoring.

EPA also considered a number of longer monitoring intervals, including annual, semiannual, quarterly, and quarterly with monthly followup on leaking valves. These intervals, along with monthly monitoring, were compared for cost effectiveness and the emissions reductions achievable. Based on the analysis of the effect of monitoring interval on costs and emissions reduction, EPA selected a monthly monitoring program for these SOCMI standards. While less frequent programs were found to be more cost effective, EPA determined that monthly monitoring does have reasonable cost effectiveness and reasonable incremental cost effectiveness. Furthermore, monthly monitoring yields the largest emissions reductions of all examined programs.

At the National Air Pollution Control Techniques Advisory Committee meeting (a public hearing held during the development of standards), industry representatives argued that, because some valves leak infrequently or significantly less often than others, monitoring all valves on a monthly basis would expend time and manpower inefficiently. If this is correct, the monitoring effort should be increased in proportion to the frequency with which the valves leak. For any valves that do not leak for 2 successive months, therefore, the standards allow an owner or operator to exclude such valves from monitoring until the first month of the next quarter. Thereafter, such valves can be monitored once every quarter until a leak is detected. If a valve leak is detected, monthly monitoring of that valve is required until it again has been shown to be leak free for 2 successive months. At such time, quarterly monitoring may be resumed.

Alternative Standards. In an effort to provide flexible standards, EPA included two alternative standards for valves in gas/vapor or light liquid service and valves in VHAP service. Owners or operators of affected facilities are allowed to select and comply with either of the alternative standards instead of the monthly monitoring LDAR program, allowing them to tailor equipment leak requirements for these valves to their own operations. Owners and operators are required first to implement a monthly monitoring program for at least 1 year. Then, a plant owner or operator can elect to comply with one of the alternative standards based on the information gathered during the 1 year of monthly monitoring.

The first alternative standard for these valves limits the maximum percent of valves leaking within a process unit to 2.0 percent, to be determined by a minimum of one annual performance test. This alternative was provided to eliminate unreasonable costs; it provides an incentive to maintain good performance levels while promoting low-leak unit design. The standard can be met by implementing any type of LDAR or engineering control program chosen by the owner or operator.

A compliance-demonstrating performance test is required initially upon designation, annually, and at other times, as requested by the Administrator. Performance tests are to be conducted by monitoring, within 1 week, all valves in gas/vapor and light liquid service or all valves in VHAP service located in the affected facility. An instrument reading of >10,000 ppmv indicates a leak. The leak percentage is calculated by dividing the number of valves for which leaks are detected by the total number of valves in gas/vapor and light liquid service or in VHAP service within the process unit. Inaccessible valves that cannot be monitored on a routine basis are included in the performance test and subsequent annual tests. The annual monitoring interval is not considered burdensome for such valves. If the performance results show more than 2.0 percent valve leakage, the process unit is not in compliance with the alternative standard.[2]

Owners and operators electing to comply with this alternative standard are required to notify the Administrator 90 days prior to implementation. If owners or operators determine that they no longer wish to comply with this alternative standard, they can submit a written notification to the Administrator, affirming compliance with the work practice standard in §60.482-7, as appropriate.

The second alternative standard for these valves is a skip-period LDAR program. Under the skip-period leak detection provisions, an owner or operator can skip from routine monitoring (monthly) to less frequent monitoring after completing a number of successful sequential monitoring intervals. Considering a performance level of less than 2.0 percent leakage and better than 90 percent certainty that all periods have this performance level, the following sets of conservative periods and fractions of periods skipped were established:

- After two consecutive quarterly periods with the percentage of leaking valves ≤2.0, the owner or operator may skip to semiannual monitoring.
- After five consecutive quarterly periods with the percentage of leaking valves ≤2.0, the owner or operator may skip to annual monitoring.

This alternative requires that, if the percentage of valves leaking is >2.0, the monthly LDAR program specified in §60.482-7 or §61.242-7, as appropriate, must be reinstated. Reinstituting the monthly LDAR does not preclude an owner or operator from electing to use the alternative standard again.

As with the first alternative standard, owners and operators electing to comply with the second alternative standard must notify the Administrator 90 days before implementation. In addition, owners or operators must identify with which of the two skip periods they are electing to comply.

Difficult-to-Monitor Valves. Some valves are difficult to monitor because access is restricted. The standards allow an annual LDAR program for valves that are difficult to monitor. Valves that are difficult to monitor are defined as valves that would require monitoring

[2] Under this alternative, failing a performance test results in immediate violation. The 2.0 percent monitoring alternative is the only situation in which leak detection monitoring can result in a violation. In all other cases, a violation does not occur as a result of the monitoring. Violations occur only if the first attempt at repair is not made within 5 days or the final repair is not completed within 15 days after the leak is detected.

personnel to be elevated more than 2 meters above any permanent available support surface. This definition is intended to ensure that ladders are used to elevate monitoring personnel under safe conditions. Valves that cannot be safely monitored by the use of ladders are classified as difficult-to-monitor and may be monitored annually rather than monthly.

Difficult-to-monitor valves are limited in new process units. In new NSPS units, up to 3 percent of the valves can be designated as difficult-to-monitor; existing NSPS process units can have more than 3 percent difficult-to-monitor valves. The NESHAP standards allow difficult-to-monitor valves in existing process units but not in new process units.

Unsafe-to-Monitor Valves. Some valves are classified as "unsafe-to-monitor." Unsafe-to-monitor valves cannot be eliminated in new or existing units. The standards allow an owner or operator to submit a plan that defines an LDAR program conforming as much as possible with the routine monitoring requirements of the standards, given that monitoring should not occur under unsafe conditions. Unsafe-to-monitor valves are defined as those valves that could, based on the judgment of the owner or operator, expose monitoring personnel to imminent hazards from temperature, pressure, or explosive process conditions.

Pump LDAR Programs

Monthly monitoring is required for pumps in light liquid service or in VHAP service (unless an owner or operator elects to comply with the equipment design standards). EPA examined monthly and quarterly monitoring LDAR programs and the use of dual mechanical seals with controlled degassing vents. Both LDAR programs are less costly than the equipment installation. The lowest average and incremental costs per megagram of reduced VOCs were associated with the monthly LDAR program. The monthly LDAR program achieves greater emissions reductions than the quarterly LDAR program, but less than the installation of the control equipment. Because the incremental costs for the equipment were considered to be unreasonably high relative to the resulting incremental emissions reductions, EPA selected monthly monitoring as the basis for the standards.

Each pump in light liquid or VHAP service is to be checked by visual inspection each calendar week for indications of liquid dripping from the pump seal. The NESHAP LDAR requirements contain an additional provision whereby any pump located within the boundary of an unmanned plant site is exempt from the weekly visual inspection requirements, provided that each pump is inspected visually as often as practicable and at least monthly.

Delay of Repair

EPA recognizes that repair of leaking components might need to be delayed for technical reasons. Both 40 CFR Part 60, Subpart VV, and 40 CFR Part 61, Subpart V, identify the following circumstances under which repairs may be delayed:

- Delay of repair of leaking equipment is allowed if the repair is technically infeasible without a process unit shutdown. An example of such a situation would be a leaking valve that could not be isolated from the process stream and that would require complete replacement or replacement of internal parts. When a valve cannot be physically isolated from the process stream, the process unit must be shut down to repair the valve. Thus, because EPA believes that mandating the shutdown of a process unit to repair valves is unreasonable, EPA allows delay of repairs that are infeasible without a shutdown.
- Delay of repair is allowed for equipment that is isolated from the process and does not remain in VOC or VHAP service. This typically applies to spare equipment that is out of service. Delay of repair is not allowed, however, for spare equipment that is pressurized and prepared to be placed on-line; such equipment is still considered to be in VOC or VHAP service.
- Delay of repair for valves is allowed if the emissions of purged material resulting from the immediate repair are greater than the fugitive emissions likely to result from the delay. Delay also is allowed if, during repair, the purged material is collected and destroyed or recovered in a control device complying with §60.482-10 or §61.242-11, as applicable.
- Delay of repair beyond a process unit shutdown is allowed for valves if the following conditions are met:
  - Valve assembly replacement is necessary during the process unit shutdown.
  - Valve assembly supplies have been depleted.
  - Valve assembly supplies had been stocked sufficiently before the supplies were depleted.
- Delay of repair beyond the next process unit shutdown is not allowed unless the next process unit shutdown occurs sooner than 6 months after the first process unit shutdown.
- Delay of repair for pumps is allowed if repairs require the use of a dual mechanical seal system that includes a barrier fluid system, and if repair is completed as soon as practicable, but not later than 6 months after the leak is detected.

The same LDAR requirements as identified in 40 CFR Part 61, Subpart V, for like components are adopted in 40 CFR Part 61, Subpart F (vinyl chloride), with the following differences:

- A reliable and accurate vinyl chloride monitoring system shall be operated for detection of major leaks and identification of the general area of the plant where a leak is located.
- The monthly monitoring requirements for valves are not applicable to any process unit in which the percentage of leaking valves is demonstrated to be less than 2.0. The calculation of this percentage is based, in part, on the monitoring of a minimum of 200 valves or 90 percent of the total valves in a process unit, whichever is less.

Other Equipment LDAR Programs

Pumps and valves in heavy liquid service, pressure relief devices in light liquid or heavy liquid service, and flanges and other connectors are to be monitored within 5 days if evidence of a potential leak is found by visual, audible, olfactory, or any other detection method. A reading of ≥10,000 ppmv indicates a leak. These requirements also apply to NESHAP pressure relief devices in liquid service and flanges and other connectors.

For pressure relief devices in gas/vapor service, the onshore natural gas processing plant standard allows an owner or operator to monitor these components on a quarterly basis to determine whether a leak exists. A reading of ≥10,000 ppmv indicates a leak. This differs from Subpart VV, which requires these components to be operated with "no detectable emissions." (The difference is due to the results of the cost and emission reduction analyses for emission reduction alternatives at onshore natural gas processing plants.) Both subparts require monitoring of pressure relief devices within 5 days after each pressure release.

The natural gas processing plant NSPS also provides that after a pressure release in a nonfractionating plant monitored only by nonplant personnel, pressure relief devices may be monitored the next time personnel are on site (instead of within the 5 days noted above). These components, however, must be monitored within 30 days after a pressure release.

Exemptions from LDAR Programs

For natural gas processing plants, pumps in light liquid service, valves in gas/vapor service, valves in light liquid service, and pressure relief devices in gas/vapor service are exempt from the routine LDAR requirements of §60.482-2(a)(1), §60.482-7(a), and §60.633(b)(1) if they are located 1) at a nonfractionating plant with a design capacity to process <10 million scfd of field gas, or 2) in process units in the Alaskan North Slope.

For petroleum refineries, pumps in light liquid service and valves in gas/vapor and light liquid service within a process unit that is located in the Alaskan North Slope are exempt from the routine LDAR requirements of §60.482-2 and §60.482-7.

2.2.4.3 Equipment, Design, Operational, and Performance Standards

This section is focused on the equipment, design, operational, and performance standards. Equipment standards refer to the use of specific types of components. Design standards include requirements for dual mechanical seals, closed purge and vent systems, caps, blind flanges, second valves, and control equipment specifications associated with flares and enclosed combustion devices.

Certain equipment operations, e.g., the proper sequence for closing double blocks and bleed valves or the requirement to maintain a pilot flame in flares, are regulated through implementing operational standards.

Performance standards refer to no detectable emissions and percent reduction efficiency for control devices. Annual monitoring is used for components subject to the "no detectable emissions" requirement, which requires emissions of less than 500 ppmv above background levels. No detectable emissions components include pumps, compressors, valves (specifically designated for no detectable emissions), pressure relief devices in gas/vapor service, and closed-vent systems for both NSPSs and NESHAPs. These components are to be tested for compliance with no detectable emissions initially upon designation, annually, and at other times, as requested by the Administrator.

Other monitoring intervals are specified in the NSPS and NESHAP rules for pressure relief devices in gas/vapor service. They are to be monitored as soon as practicable, but no later than 5 calendar days after a pressure release, to determine whether the device has been returned to a condition of no detectable emissions.

One other performance standard applies if the "allowable percentage of valves leaking" alternative standard has been elected. In that case, the performance standard allows not more than 2.0 percent leaking valves. Performance tests must be conducted initially, annually, and at other times, as requested by the Administrator.

Pumps

In addition to the LDAR program, the regulations identify equipment, design, operational, and performance

standards for pumps. The regulations state that a pump does not need to comply with the LDAR program if it meets one of the other standards, which are discussed in the following section.

Dual Mechanical Seal System. A pump in light liquid service is exempt from the LDAR program if it is equipped with a dual mechanical seal system that includes a barrier fluid system. (This does not exempt such pumps from the weekly visual inspection for indications of liquid dripping from the pump seals.)

To be exempt from the LDAR program, pumps with a dual mechanical seal system/barrier fluid system must meet all of the following six conditions:

- Each dual mechanical seal system must be:
  - Operated with the barrier fluid at a pressure that is at all times greater than the pump stuffing pressure; or
  - Equipped with a barrier fluid degassing reservoir that is connected by a closed vent system to a control device; or
  - Equipped with a system that purges the barrier fluid into a process stream with zero VOC (or VHAP) emissions to the atmosphere.
- The barrier fluid system is to be either in heavy liquid service or not in VOC service.
- Each barrier fluid system is to be equipped with a sensor that will detect failure of the seal system, the barrier fluid system, or both. The owner/operator can determine the criterion to be used to indicate failure.
- Each pump is to be checked by visual inspection each calendar week for indications of liquids dripping from the pump seals.
- Each sensor is to be checked daily or is to be equipped with an audible alarm.
- When a leak is detected (either by visual inspection or by the sensor indicating a failure), it is to be repaired as soon as practicable, but no later than 15 days after it is detected, except as provided by the "Delay of Repair" provisions. A first attempt at repair is to take place no later than 5 days after a leak is detected.

No Detectable Emissions. A pump does not need to comply with the LDAR program or dual mechanical seal system requirement if it does not have an externally actuated shaft that penetrates the pump housing. Pumps so designed can be designated for no detectable emissions if they are 1) demonstrated to be operating with no detectable emissions as indicated by an instrument reading of less than 500 ppmv above background, and 2) tested for compliance with the less than 500 ppmv above background reading initially upon its designation, annually, and at other times as requested by the Administrator.

Closed-Vent System and Control Device. If a pump is equipped with a closed-vent system capable of capturing and transporting any leakage from the seal or seals to a control device that complies with the requirements identified in the rule for such a control device, it is exempt from the requirements identified in the preceding paragraphs.

Exemptions. Pumps in light liquid service located in affected process units in the Alaskan North Slope are exempt, by Subparts GGG and KKK, from routine LDAR requirements, but are not exempt from the equipment standards.

Pumps in light liquid service, located in any nonfractionating plants with a design capacity of less than 10 million scfd, are exempt from routine LDAR requirements (but not from equipment standards) under Subpart KKK.

Compressors

The basic requirements for compressors are found in §60.482-3 of Subpart VV (40 CFR Part 60) and §61.242-3 of Subpart V (40 CFR Part 61). Compressors may comply with either an equipment design standard or a performance standard. The equipment design standard requires either 1) a seal system that includes a barrier fluid system and that prevents leakage of VOCs to the atmosphere, or 2) a closed-vent system and control device. The performance standard is for no detectable emissions. These standards are discussed in the following section.

Seal System with Barrier Fluid System. The regulations require each compressor seal system to meet the following criteria:

- Each system must be:
  - Operated with the barrier fluid at a pressure that is greater than the compressor stuffing box pressure; or
  - Equipped with a barrier fluid system that is connected by a closed-vent system to a control device; or
  - Equipped with a system that purges the barrier fluid into a process stream with zero VOC (or VHAP) emissions to the atmosphere.
- The barrier fluid system is to be either in heavy liquid service or not in VOC service.
- Each barrier fluid system is to be equipped with a sensor that will detect failure of the seal system, the barrier fluid system, or both. The regulations allow

the owner/operator to determine the criterion to be used to indicate failure.

- Each sensor is to be checked daily or is to be equipped with an audible alarm.
- When a leak is detected (either by visual inspection or by the sensor indicating a failure), it is to be repaired as soon as practicable, but no later than 15 days after it is detected, except as provided by the "Delay of Repair" provisions. A first attempt at repair is to take place no later than 5 days after a leak is detected.

The standards for compressors do not require weekly visual inspection for indications of a potential leak as is required for pumps in light liquid service.

Closed-Vent System and Control Device. A compressor does not need to comply with the equipment design standard if it is equipped with a closed-vent system that is capable of capturing and transporting any leakage from the seal to a control device. The control device must comply with the requirements specified in the rules for that control device.

No Detectable Emissions. Compressors that may be designated for "no detectable emissions" do not need to comply with either equipment design standard described. Compressors that are designated for no detectable emissions are to comply with this performance standard by a demonstration that they are operating with no detectable emissions, as indicated by a less than 500 ppmv above background instrument reading. This demonstration is required initially upon designation, annually thereafter, and at other times as requested by the Administrator.

Exemptions. Both Subparts VV and GGG exempt reciprocating compressors from the equipment standards for compressors if the only means for bringing the compressor into compliance with §60.482-3(a) through (e) and (h) involves either the recasting of the distance piece or the replacement of the compressor. Subpart GGG also has an exemption for compressors in hydrogen service. Subpart KKK exempts reciprocating compressors in wet gas service from all of §60.482-3, but requires reciprocating compressors in NGL service to comply with §60.482-3.

Subparts V, F, and J (40 CFR Part 61) do not exclude any type of compressor from compliance; both rotating and reciprocating compressors are covered. The monitoring requirements for compressors in VHAP service are the same as those for compressors in VOC service under the NSPS standards, with one exception. Compressors located within the boundary of an unmanned plant site must have a sensor, but these do not need to be checked daily or equipped with an audible alarm.

Pressure Relief Devices in Gas/Vapor Service

Pressure relief devices in gas/vapor service are required either to operate with no detectable emissions—a performance standard—or to be equipped with a closed-vent system and control device—a design standard. For pumps and compressors, no detectable emissions refers to an instrument reading of less than 500 ppmv above background. Pressure relief devices complying with the no detectable emissions standard are to be returned to that condition within 5 calendar days after each pressure release, except as provided in the "Delay of Repair" provisions. The standards also require the monitoring of the pressure relief device no later than 5 calendar days after a pressure release to confirm that no detectable emissions has been achieved.

The pressure relief devices need not comply with the no detectable emissions standard if they are equipped with closed-vent systems capable of capturing and transporting leakage from the pressure relief device to a control device that meets the requirements for that control device.

Sampling Connection Systems

Sampling connection systems are to be equipped with a closed-purge system or a closed-vent system. Each closed-purge system or closed-vent system should do one of the following:

- Return the purged process fluid directly into the process line with zero VOC (or VHAP) emissions to the atmosphere.
- Collect and recycle the purged process fluid with zero VOC (or VHAP) emissions.
- Capture and transport all the purged process fluid to a control device that complies with the requirements for that control device.

Subparts VV, GGG, V, and J exempt in situ sampling systems, and Subpart KKK exempts all sampling connection systems.

Open-ended Valves or Lines

Similar to sampling connection systems standards, open-ended valves or lines only have equipment standards including operational requirements; no performance or work practice standards apply. Open-ended valves or lines must be equipped with a cap, blind flange, plug, or second valve to seal the open end at all times, except during operations requiring process fluid flow through the open-ended valve or line.

If a second valve is used, the open-ended line or valve is to be operated so that the valve on the process fluid end is closed before the second valve is closed. If a double block-and-bleed system is being used, the bleed valve or line may remain open during operations that require venting the line between the block valves. At all other times, the open end of the bleed valve or line must be sealed (except during operations requiring process fluid flow through the open-ended line or valve).

Process Valves

LDAR programs are the primary standards for controlling equipment leak emissions from process valves. The regulations also allow, however, the use of an equipment design standard for valves. A valve that is designed so that no external actuating mechanism comes in contact with the process fluid may be designated to comply with the performance standard of no detectable emissions. As with the other equipment so designated, valves designated for no detectable emissions must be operated with emissions less than 500 ppmv above background and must be tested for compliance with the less than 500 ppmv above background reading initially upon designation, annually thereafter, and at other times as requested by the Administrator. Valves that meet the equipment design standard include weir diaphragm valves, bonnet diaphragm seal valves, and sealed bellows valves.

Flanges and Other Connectors

Flanges and other connectors are subject to the "no evidence of a potential leak" work practice standard discussed in Section 2.2.3.3. No equipment or performance standards are available for these components.

Product Accumulator Vessels

These vessels (NESHAP only) are subject to equipment standards only; performance or work practice standards do not apply. The equipment standards require product accumulator vessels to be equipped with a closed-vent system capable of capturing and transporting any leakage from the vessel to a control device that meets the requirements for that control device.

Agitators

All agitators in vinyl chloride service are required to have double mechanical seals, or an equivalent mechanism, installed to minimize vinyl chloride emissions from seals. If double mechanical seals are used, one of the following is required: 1) maintaining the pressure between the two seals so that any leak that occurs is into the agitated vessel; 2) ducting any vinyl chloride between the two seals through a control system from which the vinyl chloride in the exhaust gases does not exceed 10 ppmv; or 3) an equivalent of such measures mentioned in 1) and 2).

Closed-Vent Systems and Control Devices

As with the individual equipment components, the closed-vent systems and control devices that can be used to comply with the standards also have design, operation, and performance standards.

Closed-Vent Systems. Closed-vent systems are to be designed for and operated with no detectable emissions. They are to be monitored at start-up, annually thereafter, and at other times as requested by the Administrator. In addition, closed-vent systems are to be operated at all times when emissions might be vented to them.

Control Devices. Regulated control devices are vapor recovery systems, enclosed combustion devices, and flares. Control devices are to be monitored to ensure proper maintenance and operation. The parameters to be monitored are selected by the plant owner or operator. The regulations also require that control devices are operated at all times when emissions might be vented to them.

Vapor recovery systems (such as condensers and adsorbers) are to be designed and operated to recover, with an efficiency of ≥95 percent, the organic vapors vented to them.

Enclosed combustion devices are required either to reduce organic emissions by at least 95 percent or to be operated with a minimum residence time at a minimum temperature. For enclosed combustion devices used to comply with NSPSs, minimum residence time is 0.75 seconds and the minimum temperature is 816°C. For enclosed combustion devices used to comply with NESHAPs, these values are 0.5 seconds and 760°C, respectively. The differences in the residence times and temperatures reflect, in part, continuing research and conclusions as to the minimum residence time and temperature required to achieve ≥95 percent reduction efficiencies.

As stated in Subpart VV, flares used to comply with that subpart are to comply with the requirements of §60.18. Subpart V incorporates these same provisions. The use of a steam-assisted, air-assisted, or nonassisted flare is required by §60.18. These flares are to be operated with no visible emissions, except for periods not to exceed a total of 5 minutes during any 2 consecutive hours. They are to be operated with a flame present at all times. The presence of a flare pilot flame is to be monitored using a thermocouple or any other equivalent

device to detect the presence of a flame. In addition, owners or operators are to monitor the flares to ensure that they are operated and maintained in conformance with their designs. Finally, minimum net heating values and maximum exit velocities for the flares are identified in §60.18.

2.2.4.4 Equivalent Means of Emission Limitations

Under the standards, any owner or operator of an affected facility can request that the Administrator determine the equivalence of any alternative means of emission limitation to the equipment, design, operational, and work practice requirements of the standards. The standards for pressure relief devices in gas/vapor service and the standards for delay of repair, however, are excluded from this provision. The equivalent means of emission limitations are the same for both NSPSs (§60.484) and NESHAPs (§61.244).

Each owner or operator subject to the provisions of the equipment leak regulations may apply to the Administrator for determination of equivalence for any means of emission limitation that achieves a reduction in VOC or VHAP emissions that is at least equivalent to the reduction in VOC/VHAP emissions achieved by the controls required in the regulations. In addition, manufacturers of equipment used to control equipment leaks of VOCs/VHAPs can apply to the Administrator for determination of equivalence for any means of limitation that achieves a reduction in VOC/VHAP emissions achieved by the equipment, design, and operational requirements of the regulations.

After receiving a request for determination of equivalence, the Administrator publishes a notice in the *Federal Register*. If the Administrator judges that the request might be approved, an opportunity for a public hearing is provided. After the notice has been published and the opportunity for a public hearing has been provided, the Administrator determines the equivalence of the means of emission limitation. The determination then is published in the *Federal Register*. Any approved equivalent means of emission limitation constitutes a required work practice, equipment, design, or operational standard within the meaning of Section 111(h)(1) of the Clean Air Act. Guidelines used to make this determination for equipment, design, and operational requirements are as follows:

- Each owner, operator, or equipment manufacturer is responsible for collecting and verifying test data to demonstrate equivalence of means of emission limitation. Sufficient information needs to be collected to demonstrate that the alternative control technique is equivalent to the control technique specified in the standards.
- The Administrator compares the test data submitted by the owner, operator, or equipment manufacturer to the test data for the equipment, design, and operational requirements.
- The Administrator is allowed to condition the approval of equivalence on requirements that might be necessary to ensure operation and maintenance to achieve the same emission reduction as the equipment, design, and operational requirements.

The following guidelines are specified for determining equivalency with the required work practices:

- Each owner or operator is responsible for collecting and verifying test data to demonstrate equivalence of means of emission limitation.
- For each affected facility for which a determination of equivalence is requested, the emission reduction achieved by the required work practice first must be demonstrated. The NESHAP regulations require the demonstration period to be at least 12 months, and NSPS regulations do not have a minimum demonstration time period.
- For each affected facility for which a determination of equivalence is requested, the emission reduction achieved by the alternative means of emission limitation also must be demonstrated.
- Each owner or operator is to commit, in writing, to work practice(s) that provide for emission reductions equal to or greater than the emission reductions achieved by the required work practice.
- The Administrator will compare the demonstrated emission reduction for the alternative means of emission limitation to the demonstrated emission reduction for the required work practice and will consider the commitment of the owner or operator to the alternative work practices.
- The Administrator may condition the approval of equivalence on requirements that might be necessary to ensure operation and maintenance to achieve the same emission reduction as the required work practice.

If they desire, owners or operators may offer a unique approach to demonstrate any equivalent means of emission limitation.

2.2.4.5 Test Methods and Procedures

The requirements associated with the test methods and procedures used to comply with the standards are outlined in this section. Each owner or operator is required to comply with the test methods and procedural requirements provided in the specified sections of the regulations.

Monitoring Method

All monitoring for leaks is to be performed in accordance with EPA Reference Method 21. Specifics of Method 21 are discussed in Chapter 4.

In VOC (or VHAP) Service Presumption

One of the basic presumptions of the equipment leak standards is that a piece of equipment is in VOC (or VHAP) service and, thus, is subject to the standards. This presumption can be overcome by an owner or operator demonstrating that the piece of equipment is not in VOC (or VHAP) service. For a piece of equipment to be considered not in VOC (or VHAP) service, the percent VOC (or VHAP) must be reasonably expected never to exceed 10 percent by weight. For VOCs, the weight percent determination is to conform to the general methods described in ASTM E-260, E-168, or E-169. For VHAPs, the weight percent determination is to conform to the general method described in ASTM D-2267.

Subpart KKK extends this presumption to equipment in wet gas service (i.e., each piece of equipment is presumed to be in VOC service or in wet gas service). A piece of equipment is considered in wet gas service if it contains or contacts the field gas before the extraction step in the process. An owner or operator must demonstrate otherwise to exclude equipment from the in-wet-gas-service presumption.

In determining the weight percent VOC in the process fluid, an owner or operator may exclude nonreactive organic compounds from the total quantity of organics provided that 1) the substances excluded are those considered by the Administrator to have negligible reactivity; and 2) the owner or operator demonstrates that the percent organic content, excluding nonreactive organic compounds, reasonably can be expected never to exceed 10 percent by weight.

Instead of using the procedures outlined, an owner or operator may elect to use engineering judgment to demonstrate that the weight percent does not exceed 10 percent. As stated in the rule, the engineering judgment must demonstrate that the VOC (or VHAP) content clearly does not exceed 10 percent by weight. If EPA and an owner or operator disagree about whether the engineering judgment clearly demonstrates this, then the appropriate ASTM method must be used to resolve the disagreement.

If an owner or operator determines that a piece of equipment is in VOC (or VHAP) service, the determination can be revised only after following the ASTM methods of procedure; engineering judgment cannot be used to revise the determination.

In Light Liquid Service Conditions

NSPSs distinguish between equipment according to the characteristics of the process fluid. In this section of the rule (Subpart IV), the conditions for determining whether a piece of equipment is in light liquid service are identified:

- The vapor pressure of one or more of the components must be >0.3 kPa at 20°C.
- The total concentration of the pure components with a vapor pressure >0.3 kPa at 20°C is >20 percent by weight.
- The fluid must be liquid at operating conditions.

In making the determination, vapor pressures may be obtained from standard references or determined by ASTM D-2879.

As noted earlier, Subparts KKK and GGG allow owners or operators to use an alternative definition for in light liquid service. In these two standards, a piece of equipment can be designated as being in light liquid service if the weight percent evaporated is >10 percent at 150°C (as determined by ASTM Method D-86).

Representative Samples

For samples to be representative of the process fluid contained in or contacting the equipment or of the gas being combusted in a flare, they must be taken in conjunction with:

- Determining that a piece of equipment is not in VOC (or VHAP) service.
- Determining whether a piece of equipment is in light liquid service.
- Determining the heat content of flare gas.

Flares

Certain requirements associated with the use of flares are identified in Subpart VV (40 CFR Part 60) and Subpart V (40 CFR Part 61). These requirements include the use of Reference Method 22 to determine compliance with the visible emission provisions for flares and the monitoring of a flare pilot flame using a thermocouple or any other equivalent device to detect the presence of a flame. The requirements also include calculation and sampling procedures for determining the heat content and exit velocity. All of these requirements also are found in §60.18 of 40 CFR Part 60.

2.2.4.6 Recordkeeping and Reporting Requirements

Recordkeeping and reporting requirements are included in the regulations to provide documentation for assessing compliance with each standard (work practice, performance, or equipment). Review and inspection of these records and reports provide information for enforcement personnel to assess compliance with the standards.

Listed in Table 2-6 are some of the records that must be kept by the plant owner/operator to comply with the standards; listed in Table 2-7 are some of the reports an owner/operator is required to submit. Review of submitted reports reduces, but does not necessarily eliminate, required in-plant inspections. Detailed discussion of specific recordkeeping/reporting requirements is found in Chapter 5 of this handbook.

Table 2-6. Recordkeeping Requirements

Equipment — List IDs — Compliance test — Unsafe-to-monitor valves — Difficult-to-monitor valves
No detectable emissions designation
In vacuum service
Not in VOC (or VHAP) service
LDAR results — Monitoring — Repair
Closed-vent systems
Control devices

Table 2-7. Reporting Requirements

NSPS — Notification of construction — Initial semiannual report — Semiannual reports
NESHAP — Initial statement — Semiannual report — Vinyl chloride—no report if fewer than 2 percent of the valves leak

2.3 State Regulation of VOC Sources

The Clean Air Act Amendments of 1977 require each state containing areas in which the NAAQS for ozone was exceeded to adopt and submit a revised SIP to EPA by January 1, 1979. States that were unable to demonstrate attainment with the NAAQS for ozone by the statutory deadline of December 31, 1982, could request extensions for attainment of the standard. States granted such an extension were required to submit a further revised SIP by July 1, 1982. The new deadline for compliance with the ozone standard was December 31, 1987.

Section 172(a)(2) and (b)(3) of the 1977 Clean Air Act required nonattainment area SIPs to include RACT requirements for stationary sources. EPA allowed states to defer the adoption of RACT regulations on a category of stationary sources of VOCs until after EPA published a CTG for that VOC source category (44 FR 20372; 44 FR 43761). This delay allowed the states to make more technically sound decisions regarding the application of RACT. To date, EPA has published guidance documents addressing equipment leaks of VOCs from petroleum refinery equipment (U.S. EPA, 1978); synthetic organic chemical and polymer manufacturing equipment (U.S. EPA, 1984a); and natural gas/gasoline processing plants (U.S. EPA, 1983b).

Although a review of existing information and data on the technology and cost of various control techniques to reduce emissions is included in CTG documents, these documents are necessarily general in nature and do not fully account for variations within a stationary source category. The purpose of CTG documents is to provide state and local air pollution control agencies with an initial information base for proceeding with their own assessment of RACT for specific stationary sources. The CAAA have expanded significantly the scope of control efforts required for inclusion in the SIPs. Most ozone nonattainment areas now are grouped into one of five principal classifications based on the severity of the problem. At a minimum, those states that contain ozone nonattainment areas are required to continue development and implementation of RACT for stationary sources (including equipment leaks of VOCs). For most states, the CAAA contain a variety of incentives to expand the scope of VOC source control.

As of 1994, 15 states have some form of equipment leak regulation in place (Alabama, California, Connecticut, Delaware, District of Columbia, Kentucky, Louisiana, Maryland, New Jersey, New York, North Carolina, Oklahoma, Pennsylvania, Texas, and West Virginia), and six states have programs under development or pending approval (Illinois, Massachusetts, Michigan, Missouri, Ohio, and Utah) (BNA, 1994; U.S. EPA, 1988). **Note: States that developed programs in 1987 or 1988 may not be included in this listing.** In most cases, state programs closely follow federal NSPS regulations for equipment definition, standards, monitoring, and repair requirements. Principal variations are the types of sources regulated, cutoffs and exemptions, allowable test methods, recordkeeping, and reporting details.

The scope of existing state regulations and the application of new regulations can be expected to

continue to expand as states seek to meet VOC control objectives. Major local criteria affecting the extent to which such efforts are pursued will be the severity of the problem (i.e., the ozone nonattainment classification) and the types and local distribution of stationary sources subject to this regulatory approach. In states such as California, which regulates air pollution through separate regional authorities within the state, the variability of regulatory applications will be even greater. Accurate, current information on controlling VOC emissions from equipment leaks is obtained most efficiently through direct contact with the appropriate state or local agency.

2.4 References

When an NTIS number is cited in a reference, that document is available from:

National Technical Information Service
5285 Port Royal Road
Springfield, VA 22161
703-487-4650

BNA. 1994. Bureau of National Affairs, Inc. State VOC equipment leak regulations: 1990 through 1993. Database search prepared by BNA (Washington, DC) for Eastern Research Group, Inc., 110 Hartwell Avenue, Lexington, MA 02173-3198. February 1994.

U.S. EPA. 1990a. U.S. Environmental Protection Agency. Inspection techniques for fugitive VOC emission sources: Course module S380, lecturer's manual. EPA-340/1-90-026b. Washington, DC. September.

U.S. EPA, 1990b. U.S. Environmental Protection Agency. Hazardous waste treatment, storage, and disposal facilities: Background information for promulgated organic emission standards for process vents and equipment leaks. EPA-450/3-89-009. NTIS PB90-252503. Research Triangle Park, NC. June.

U.S. EPA. 1990c. U.S. Environmental Protection Agency. Polymer manufacturing industry-enabling document. EPA-450/3-90-019. NTIS PB91-161745. Research Triangle Park, NC. December.

U.S. EPA. 1988. U.S. Environmental Protection Agency. Summary of state VOC regulations, volume 2. Group III CTG and greater than 100 tons per year non-CTG VOC regulations. EPA-450/2-88-004. NTIS PB88-241492. Research Triangle Park, NC. May.

U.S. EPA. 1984a. U.S. Environmental Protection Agency. Control of volatile organic compound leaks from the synthetic organic chemicals manufacturing industry and polymer manufacturing equipment. EPA-450/3-83-006. NTIS PB84-189372. Research Triangle Park, NC. March.

U.S. EPA. 1984b. U.S. Environmental Protection Agency. Fugitive VOC emissions in the synthetic organic chemicals manufacturing industry. EPA-625/10-84-004. Research Triangle Park, NC, and Cincinnati, OH. December. Available from the Office of Research and Development, Center for Environmental Research Information, Cincinnati, OH. 513-569-7562 (phone), 513-569-7566 (fax).

U.S. EPA. 1983a. U.S. Environmental Protection Agency. Equipment leaks of VOC in natural gas production industry: Background information for proposed standards. EPA-450/3-82-024a. NTIS PB84-155126. Research Triangle Park, NC. December.

U.S. EPA. 1983b. U.S. Environmental Protection Agency. Control of volatile organic compound equipment leaks from natural gas/gas processing plants. EPA-450/3-83-007. NTIS PB84-161520. Research Triangle Park, NC. December.

U.S. EPA. 1982a. U.S. Environmental Protection Agency. Fugitive emission sources of organic compounds: Additional information on emissions, emission reductions, and costs. EPA-450/3-82-010. NTIS PB82-217126. Research Triangle Park, NC. April.

U.S. EPA. 1982b. U.S. Environmental Protection Agency. VOC fugitive emissions in the synthetic organic chemicals manufacturing industry: Background information for promulgated standards. EPA-450/3-80-033b. NTIS PB84-105311. Research Triangle Park, NC. June.

U.S. EPA. 1982c. U.S. Environmental Protection Agency. VOC fugitive emissions in petroleum refining industry: Background information for proposed standards. Draft. EPA-450/3-81-015a. NTIS PB83-157743. January.

U.S. EPA. 1982d. U.S. Environmental Protection Agency. Benzene fugitive emissions: Background information for proposed standards. EPA-450/3-80-032b. NTIS PB84-210301. Research Triangle Park, NC. June.

U.S. EPA. 1982e. U.S. Environmental Protection Agency. Vinyl chloride: First review of national emission standards. EPA-450/3-82-003. NTIS PB84-114354. Research Triangle Park, NC. March.

U.S. EPA. 1980. U.S. Environmental Protection Agency. VOC fugitive emissions in the synthetic organic chemicals manufacturing industry: Background information for proposed standards. EPA-450/3-80-033a. NTIS PB81-152167. Research Triangle Park, NC. November.

U.S. EPA. 1978. U.S. Environmental Protection Agency. Control of volatile organic compound leaks from petroleum refinery equipment. EPA-450/2-78-036. NTIS PB82-6158. Research Triangle Park, NC. June.

Chapter 3
Regulated Equipment

Equipment leak standards are designed to control emissions of VOCs and VHAPs from regulated equipment through the application of work practices and equipment practices. The work practice most commonly applied to control equipment leaks is the LDAR program, which is discussed in detail in Section 2.2.4.2. Subsequent chapters address the monitoring, recordkeeping, and reporting requirements of implementing a LDAR program under NSPS or NESHAP standards. In this chapter, regulated equipment is reviewed to illustrate how monitoring programs are applied to specific pieces of equipment.

Equipment practices include the use of specific types of components, equipment design standards or specifications, and operational standards for certain types of equipment. Equipment practices are evaluated using performance standards that provide a basis for monitoring or substantiating the effectiveness of such control practices. Equipment practices, briefly summarized in Section 2.2.4.3, are addressed in greater detail in this chapter.

A general set of equipment is covered by all of the equipment leak standards. Some equipment is covered only by specific standards. For example, product accumulator vessels are covered only by the equipment leak standards for benzene. Also, the vinyl chloride fugitive emission standards cover additional sources (loading and unloading lines, agitators, slip gauges, opening of equipment, and in-process wastewater). Except for agitators, however, the emissions from these sources generally are not considered "equipment leaks." The equipment leak standards also identify requirements for closed-vent systems and control devices that may be used to comply with the regulations.

3.1 Pumps

Pumps are used extensively in the SOCMI and petroleum refinery industries, as well as in natural gas processing plants, for moving organic fluids. The most widely used pump is the centrifugal pump. Other types of pumps that also may be used are the positive-displacement, reciprocating and rotary action, and special canned-motor and diaphragm pumps (U.S. EPA, 1990).

Chemicals transferred by pumps can leak at the point of contact between the moving shaft and stationary casing. To isolate the pump's interior from the atmosphere, all pumps, except the seal-less type (canned-motor and diaphragm), require a seal at the point where the shaft penetrates the housing. The most commonly used seals in these pumps are packed and mechanical (U.S. EPA, 1980a).

3.1.1 Packed Seals

Packed seals can be used on both reciprocating and rotary action pumps. A packed seal consists of a cavity ("stuffing box") in the pump casing filled with special packing material that is compressed with a packing gland to form a seal around the shaft. A simple packed seal is illustrated in Figure 3-1. To prevent buildup of frictional heat, lubrication is required. A sufficient amount of liquid (either the liquid being pumped or another liquid that is injected) must be allowed to flow between the packing and the shaft to provide the necessary lubrication. If this packing and/or the shaft seal face degrade after a period of usage, organic compounds can leak to the atmosphere.

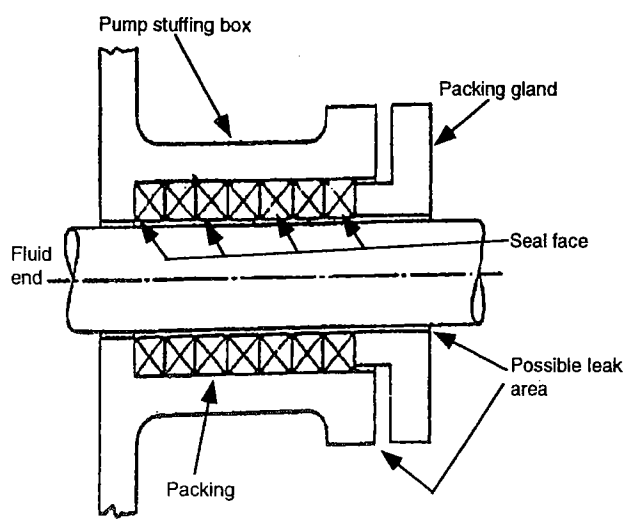

Figure 3-1. Diagram of simple packed seal (U.S. EPA, 1980b).

3.1.2 Single Mechanical Seals

Mechanical seals, limited in application to pumps with rotating shafts, can be single or dual. Basic designs of mechanical seals vary, but all have a lapped seal face between a stationary element and a rotating seal ring (Ramsden, 1978). In a single mechanical seal application, the rotating-seal ring and stationary element faces are lapped to a very high degree of flatness to maintain contact over their shared surface area (Figure 3-2). The faces are held together by a

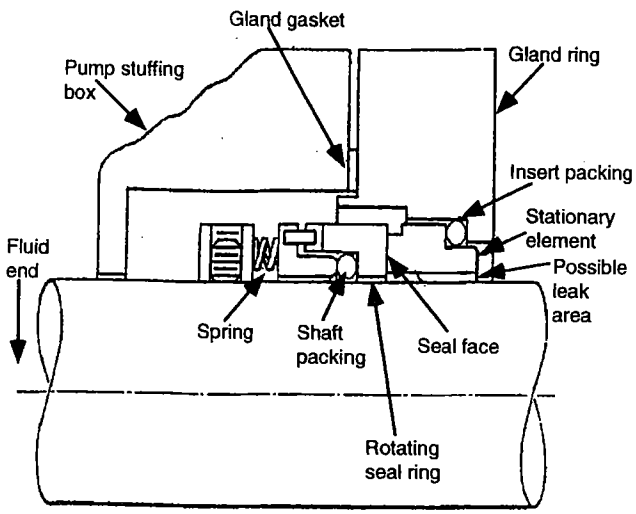

Figure 3-2. Diagram of basic single mechanical seal (U.S. EPA, 1980b).

combination of pressure supplied by a spring and the pump pressure transmitted through the liquid that is being pumped. An elastomer seals the rotating face to the shaft. The stationary face is sealed to the stuffing box with another elastomer or gasket. As with packed seals, the faces must be lubricated; however, because of the mechanical seal's construction, much less lubrication is needed. Again, if the seal becomes imperfect because of wear, the organic compounds being pumped can leak between the seal faces and can be emitted to the atmosphere.

3.1.3 Dual Mechanical Seals

Dual mechanical seals (Figure 3-3) can be arranged back to back, in tandem, or face to face. In the back-to-back arrangement, the two seals form a closed cavity. A barrier fluid, such as water or seal oil, is circulated through the cavity. Because the barrier fluid surrounds the dual seal and lubricates both sets of seal faces, the heat transfer and seal life characteristics of this dual seal are much better than those of the single seal. In order for the seal to function, the barrier fluid must be at a pressure greater than the operating pressure of the stuffing box. As a result, some barrier fluid will leak across the seal faces. Liquid leaking across the inboard

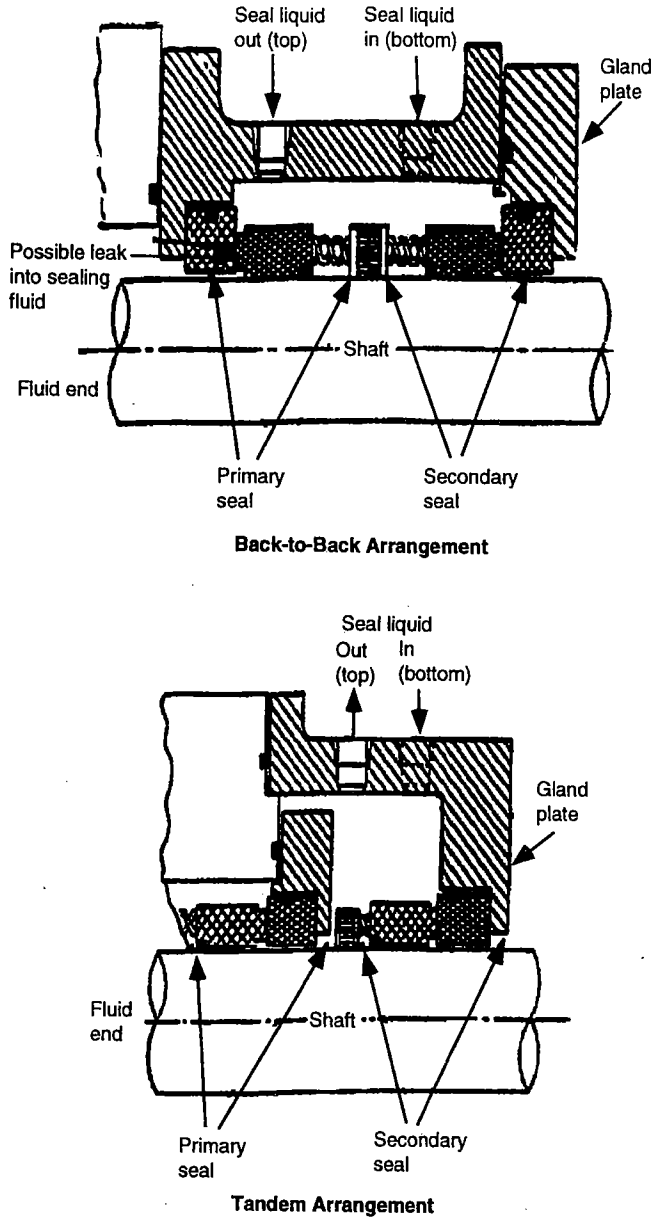

Figure 3-3. Typical arrangements of dual mechanical pump seals (U.S. EPA, 1984).

face will enter the stuffing box and mix with the process liquid. Barrier fluid going across the outboard face will exit to the atmosphere. Therefore, the barrier fluid must be compatible with the process liquid and with the environment (Ramsden, 1978, p. 99).

In a tandem dual mechanical seal arrangement, the seals face the same direction, and the secondary seal provides a backup for the primary seal. A seal flush is used in the stuffing box to remove the heat generated by friction. As with the back-to-back seal arrangement, the cavity between the two tandem seals is filled with a barrier fluid. The barrier fluid, however, is at a pressure lower than that in the stuffing box. Therefore, any leakage will be from the stuffing box into the seal cavity

containing the barrier fluid. Since this liquid is routed to a closed reservoir, process liquid that leaks into the seal cavity also will be transferred to the reservoir. At the reservoir, the process liquid could vaporize and be emitted to the atmosphere. To ensure that VOCs or VHAPs do not leak from the reservoir, the reservoir can be vented to a control device.

Another arrangement of dual seals is face to face. In this configuration, two rotating faces are mated with a common stationary barrier. Barrier fluid may be provided at higher or lower pressures than in the stuffing box. As in the tandem arrangement, if the barrier fluid is at a lower pressure than in the stuffing box, the barrier fluid reservoir may require venting to a control device.

3.1.4 Seal-less Pumps

The seal-less pump includes canned-motor and diaphragm pumps. In canned-motor pumps (Figure 3-4), the cavity housing, the motor rotor, and the pump casing are interconnected. As a result, the motor

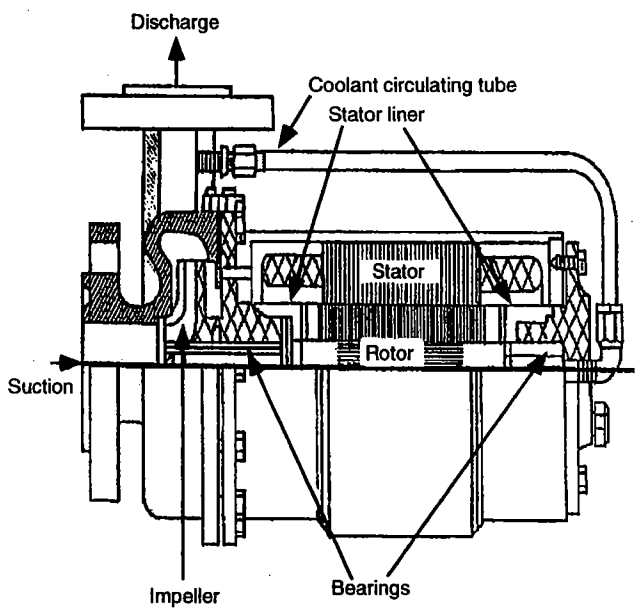

Figure 3-4. Diagram of seal-less canned-motor pump (U.S. EPA, 1990, p. 2-11).

bearings run in the process liquid and all shaft seals are eliminated. Because the process liquid is the bearing lubricant, abrasive solids cannot be tolerated. Canned-motor pumps are used widely for handling organic solvents, organic heat transfer liquids, light oils, and many toxic or hazardous liquids. Canned-motor pumps also are used when leakage is an economic problem (Perry and Chilton, 1978, p. 6-8).

Diaphragm pumps (Figure 3-5) perform similarly to piston and plunger pumps. The driving member, however, is a flexible diaphragm fabricated of metal,

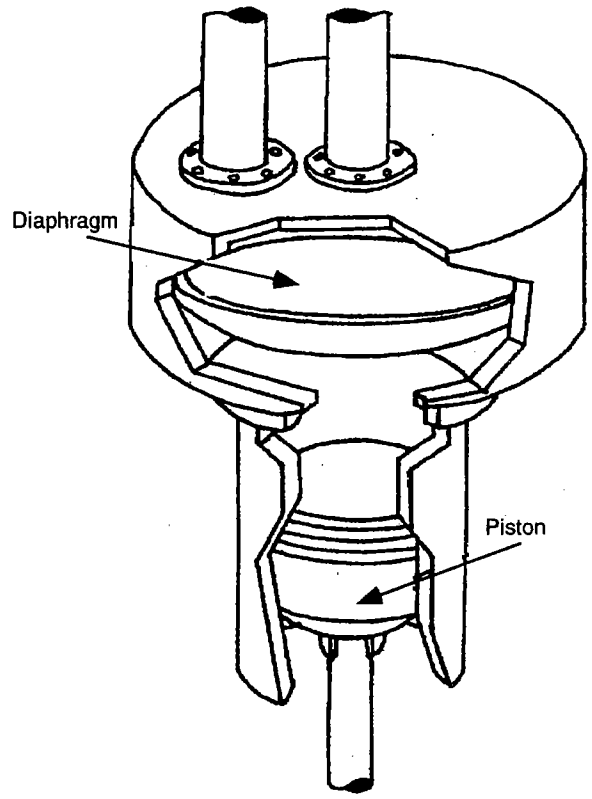

Figure 3-5. Diagram of diaphragm pump (U.S. EPA, 1990, p. 2-13).

rubber, or plastic. The primary advantage of this arrangement is that no packing and shaft seals are exposed to the process liquid, which is an important asset when handling hazardous or toxic liquids.

3.2 Compressors

In the industries affected by these standards, centrifugal, reciprocating, and rotary compressors are used. The centrifugal compressor uses a rotating element or series of elements containing curved blades to increase the pressure of a gas by centrifugal force. Reciprocating and rotary compressors increase pressure by confining the gas in a cavity and progressively decreasing the volume of the cavity. Reciprocating compressors usually use a piston and cylinder arrangement, while rotary compressors use rotating elements such as lobed impellers or sliding vanes.

As with pumps, seals are required to prevent leakage from compressors. Rotary shaft seals for compressors may be labyrinth, restrictive carbon rings, mechanical contact, or liquid film. Figure 3-6 is an illustration of typical designs of these four types of seals. All of these seals are leak restriction devices, but none of them completely eliminates leakage. To respond to leakage, many compressors are equipped with ports in the seal area that evacuate collected gases.

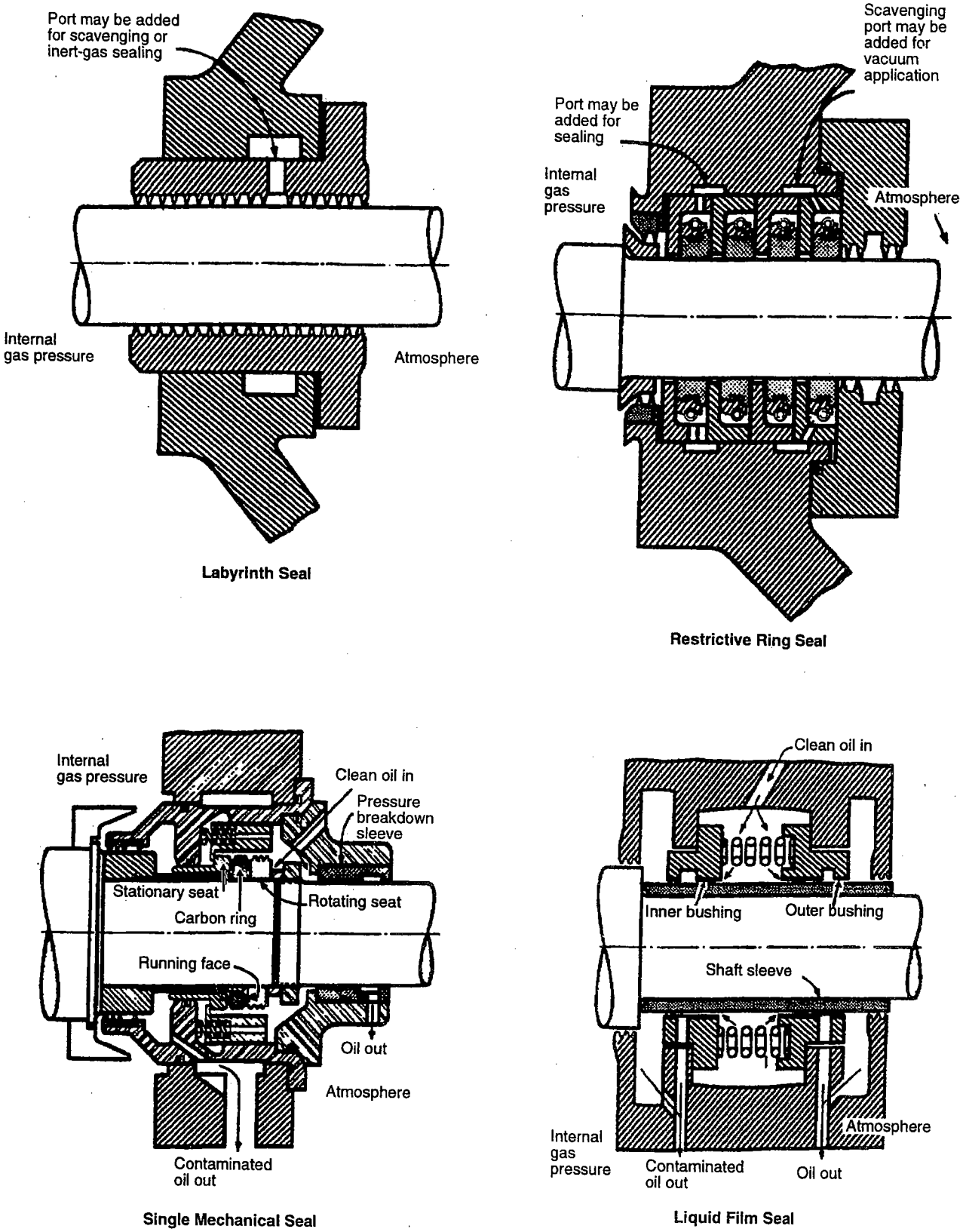

Figure 3-6. Typical designs of mechanical compressor seals (Ramsden, 1978, p. 99).

3.2.1 Labyrinth

The labyrinth seal is composed of a series of close tolerance, interlocking "teeth" that restrict the flow of gas along the shaft. Many variations in "tooth" design and materials of construction are available. Although labyrinth seals as a group have the largest leak potential of the different types, properly applied variations in tooth configuration and shape can reduce leakage by up to 40 percent over a straight-pass-type labyrinth (Nelson, 1977).

3.2.2 Carbon Rings

Restrictive carbon ring seals consist of multiple stationary carbon rings with close shaft clearances. These seals may be operated dry with a sealing fluid or with a buffer gas. Restrictive ring seals can achieve lower leak rates than can the labyrinth type.

3.2.3 Mechanical

Mechanical contact seals are a common type of seal for rotary compressor shafts and are similar to the mechanical seals described for pumps. In this type of seal, the clearance between the rotating and stationary elements is reduced to zero, and oil or another suitable lubricant is supplied to the seal faces. Mechanical seals can achieve the lowest leak rates of the types discussed here, but they are not suitable for all processing.

3.2.4 Packed

Packed seals are used for reciprocating compressor shafts. As with pumps, the packing in the stuffing box is compressed with a gland to form a seal. Packing used on reciprocating compressor shafts is often of the "chevron" or netted V type. To ensure operating safety, the area between the compressor seals and the compressor motor (distance piece) normally is enclosed and vented outside of the compressor building. If hydrogen sulfide is present in the gas, then the vented vapors are flared normally.

Reciprocating compressors can use a metallic packing plate and nonmetallic partially compressible material (i.e., Graffoil, Teflon) or oil wiper rings to seal shaft leakage to the distance piece. Nevertheless, some leakage into the distance piece may occur.

3.2.5 Liquid Film Seals

In addition to having seal types like those used for pumps, centrifugal compressors can be equipped with a liquid-film seal. The seal is a film oil that flows between the rotating shaft and the stationary gland. The oil that leaves the compressor from the pressurized system side is under the system internal gas pressure and is contaminated with the gas. When this contaminated oil is returned to the open oil reservoir, process gas and entrained VOCs and VHAPs can be released to the atmosphere.

3.3 Pressure Relief Devices

Engineering codes require the use of pressure-relieving devices or systems in applications where the process pressure may exceed the maximum allowable working pressure of the vessel. The pressure relief valve is the most common type of pressure-relieving device used. Typically, relief valves are spring-loaded (see Figure 3-7) and designed to open when the system pressure exceeds a set pressure, allowing the release of vapors or liquids until the system pressure is reduced to its normal operating level. When the normal pressure is re-attained, the valve reseats, and a seal is again formed. The seal is a disc on a seat, and a leak through this seal is a potential source of VOC and VHAP fugitive emissions. The potential causes of leakage from relief valves are "simmering or popping" (a condition that occurs when the system pressure comes close to the set pressure of the valve); improper reseating of the valve after a relieving operation; and corrosion or degradation of the valve seat (U.S. EPA, 1980a, p. 3-3).

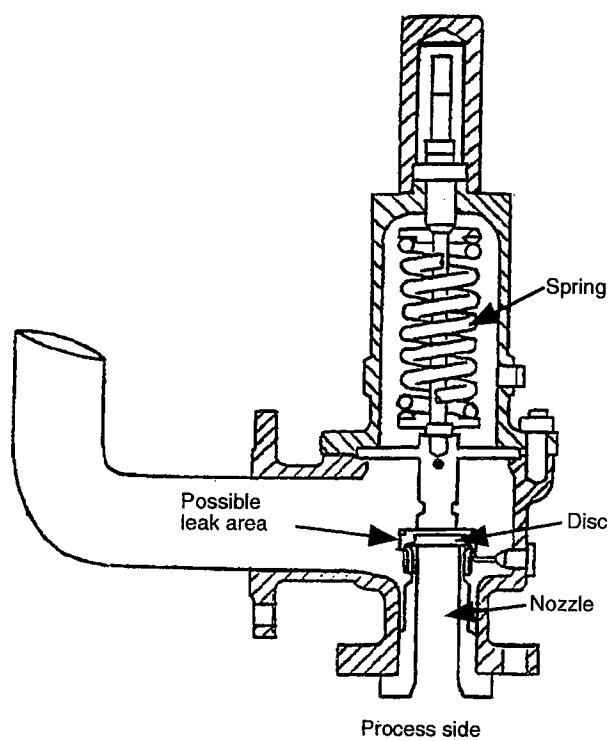

Figure 3-7. Diagram of a spring-loaded relief valve (U.S. EPA, 1990, p. 2-16).

Rupture discs also may be used to relieve pressure in process units (see Figure 3-8). These discs are made of a material that ruptures when a set pressure is exceeded, thus allowing the system to depressurize. The advantage of a rupture disc is that the disc seals tightly and does not allow any VOC or VHAP to escape from the system during normal operations. When the disc ruptures, however, the system will depressurize until atmospheric conditions are obtained, unless the disc is used with a pressure relief valve.

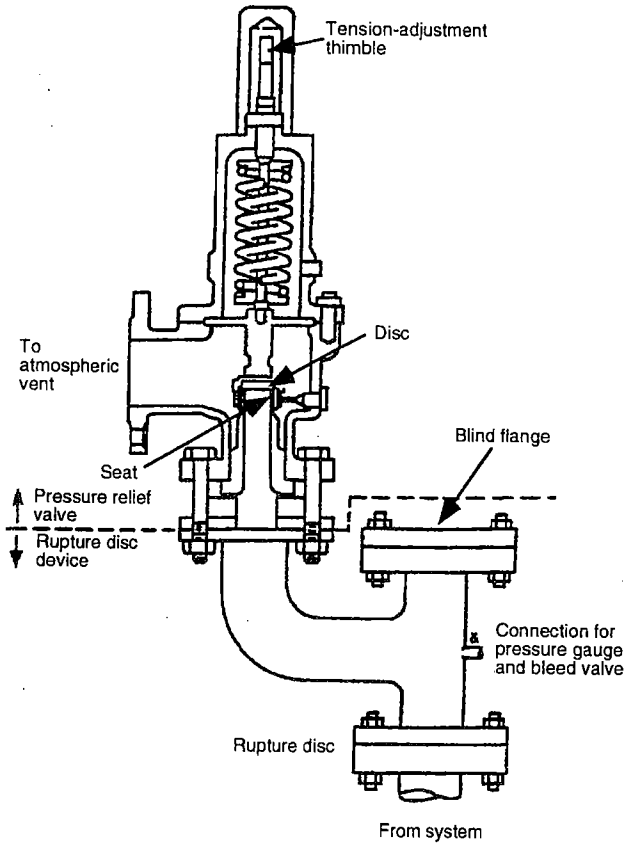

Figure 3-8. Typical design of a pressure relief valve mounted on a rupture disc device (Ramsden, 1978, p. 99).

3.4 Sampling Connections

Process unit operations are checked periodically by routine analysis of feedstocks and products. To obtain representative samples for these analyses, sampling lines first must be purged. If the flushing liquid is not controlled, it could be drained onto the ground or into a process drain where it would evaporate and release VOCs or VHAPs to the atmosphere. Closed-loop sampling systems control the purged process fluid by returning it directly to the process line, collecting and recycling the fluid, or transporting the fluid to a control device. These sampling system controls typically allow zero VOC or VHAP emissions to the atmosphere. Two closed-loop sampling systems are illustrated in Figure 3-9.

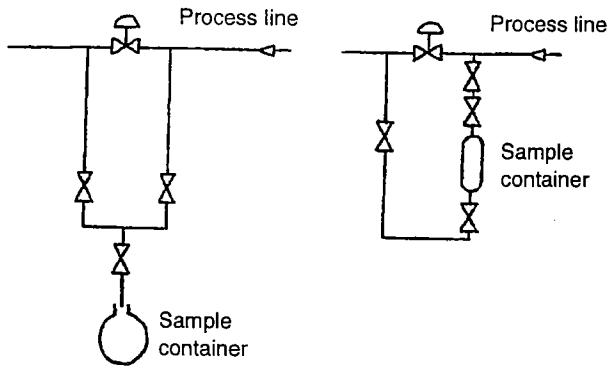

Figure 3-9. Diagram of two closed-loop sampling systems (Ramsden, 1978, p. 99).

3.5 Open-ended Lines or Open Valves

Some valves are installed in a system so that they function with the downstream line open to the atmosphere. Open-ended lines, which are used mainly in intermittent service for sampling and venting, include purge, drain, and sampling lines. Some open-ended lines are needed to preserve product purity. Normally, these are installed between multi-use product lines to prevent products from collecting in cross-tie lines during valve seat leakage. A faulty valve seat or incompletely closed valve would result in leakage through the valve, releasing fugitive VOC or VHAP emissions to the atmosphere.

Operational requirements specify that open-ended valves or lines be equipped with a cap, blind flange, plug, or second valve. The purpose of the cap, blind flange, plug, or second valve is to seal the open end at all times, except during operations requiring process fluid flow through the open-ended valve or line.

If a second valve is used, the open-ended line or valve is to be operated so that the valve on the process fluid end is closed before the second valve is closed. If a double block-and-bleed system is being used, the bleed valve or line may remain open during operations that require venting the line between the block valves. At all other times, the open end of the bleed valve or line must be sealed (again, except during operations requiring process fluid flow through the open-ended line or valve).

3.6 Process Valves

One of the most common pieces of equipment affected by these standards is the process valve. Commonly used types are control, globe, gate, plug, ball, relief, and check valves (see Figures 3-10 and 3-11). All except the relief valve (see Section 3.3) and check valve are activated through a valve stem, which may

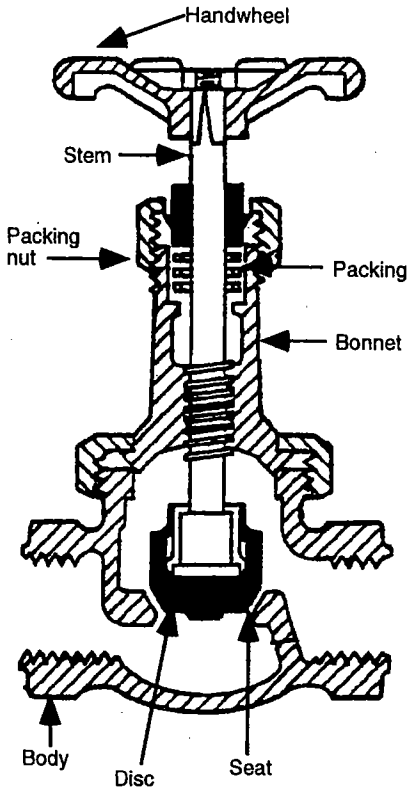

Figure 3-10. Diagram of a globe valve with a packed seal (U.S. EPA, 1980b).

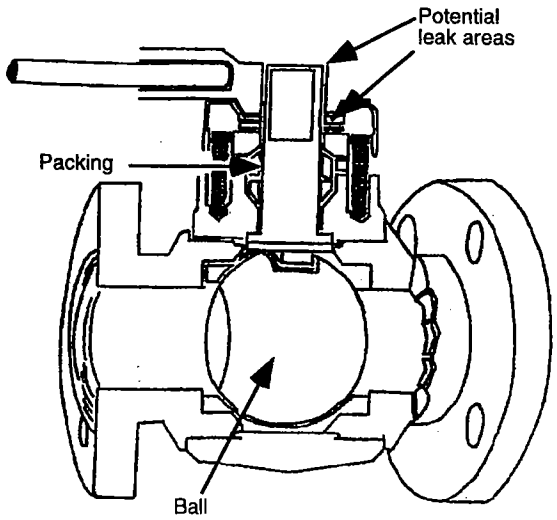

Figure 3-11. Diagram of a ball valve (U.S. EPA, 1990, p. 2-21).

have either a rotational or linear motion, depending on the design. The valve stem requires a seal to isolate the process fluid inside the valve from the atmosphere. The possibility of a leak through this seal makes it a potential source of fugitive emissions. Since a check valve has no stem or subsequent packing gland, it is not considered a potential source of fugitive emissions.

The stem can be sealed to prevent leakage by using a packing gland or O-ring seals. Valves that require the stem to move in and out with or without rotation must use a packing gland. Conventional packing glands are suited for a wide variety of packing material. The most common are various types of braided asbestos that contain lubricants. Other packing materials include graphite, graphite-impregnated fibers, and tetrafluorethylene polymer. The packing material used depends on the valve application and configuration. These conventional packing glands can be used over a range of operating temperatures, but at high pressures, these glands must be quite tight to obtain a good seal (Templeton, 1971).

Elastomeric O-rings also are used for sealing process valves. These O-rings provide good sealing, but are not suitable if sliding motion occurs through the packing gland. These seals are used rarely in high pressure service, and operating temperatures are limited by the seal material.

Bellows seals are more effective for preventing process fluid leaks than is the conventional packing gland or any other gland-seal arrangement. This type of seal incorporates a formed metal bellows that makes a barrier between the disc and body bonnet joint (see Figure 3-12). The bellows is the weak point of this type of system, and service life can be quite variable. Consequently, this type of seal normally is backed up with a conventional packing gland and often is fitted with a leak detector in case of failure.

A diaphragm may be used to isolate the working parts of the valve and the environment from the process liquid. Illustrated in Figures 3-13 and 3-14 are two types of diaphragm seals. The diaphragm also may be used to control the flow of the process fluid. In this design, a compressor component pushes the diaphragm toward the valve bottom, throttling the flow. The diaphragm and compressor are connected in a manner so that separating them is impossible under normal working conditions. When the diaphragm reaches the valve bottom, it seats firmly against the bottom, forming a leak-proof seal. This configuration is recommended for fluids containing solid particles and for medium-pressure service. Depending on the diaphragm material, this type of valve can be used at temperatures up to 205°C and in severe acid solutions. If the seal fails, however, a valve using a diaphragm seal can

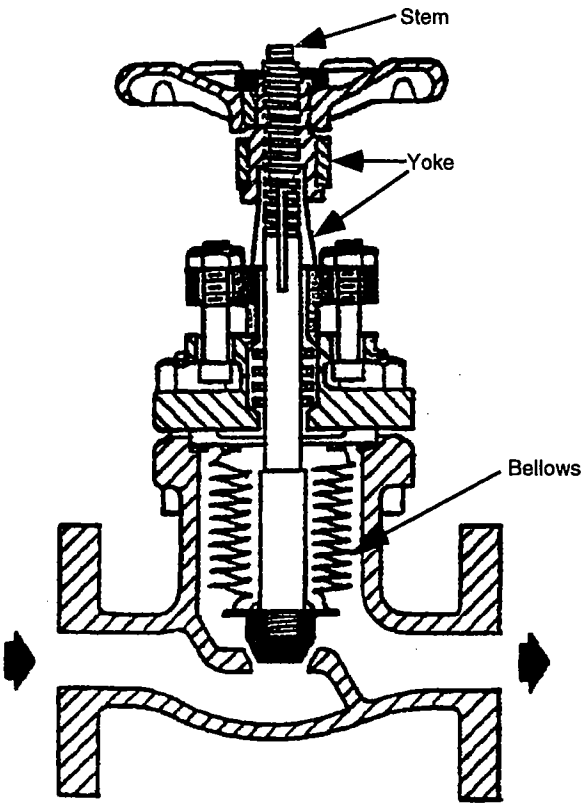

Figure 3-12. Diagram of a sealed bellows valve (U.S. EPA, 1990, p. 2-23).

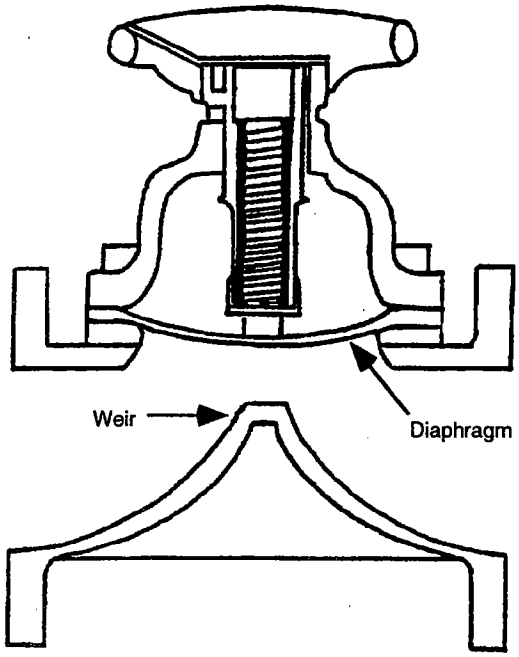

Figure 3-13. Diagram of a weir diaphragm seal (U.S. EPA, 1990, p. 2-24).

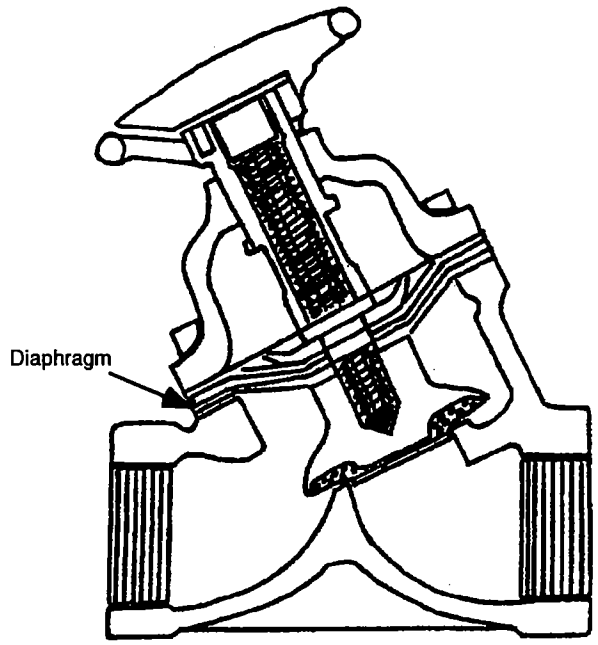

Figure 3-14. Diagram of a bonnet diaphragm seal (U.S. EPA, 1990, p. 2-24).

become a source of fugitive emissions (Pikulik, 1978, pp. 3-23 and 3-24).

3.7 Flanges and Other Connectors

Flanges are bolted, gasket-sealed junctions used wherever pipes or other equipment such as vessels, pumps, valves, and heat exchangers may require isolation or removal. Connectors are all other nonwelded fittings that serve a similar purpose to flanges, which also allow bends in pipes (elbows), joining two pipes (couplings), or joining three or four pipes (tees or crosses). Connectors typically are threaded.

Flanges may become fugitive emissions sources when leakage occurs because of improperly chosen gaskets or poorly assembled flanges. The primary cause of flange leakage is thermal stress, which causes deformation of the seal between the flange faces. Threaded connectors may leak if the threads become damaged or corroded or if tightened without sufficient lubrication or torque. LDAR programs are the principal control technique for flanges and other connectors.

3.8 Product Accumulator Vessels

The background information document for the proposed benzene standards (U.S. EPA, 1980b) states that product accumulator vessels include overhead and bottoms receiver vessels used with fractionation columns and product separator vessels used in series

with reactor vessels to separate reaction products. Accumulator vessels can be vented directly to the atmosphere or indirectly through a blowdown drum or vacuum system. When an accumulator vessel contains benzene and vents to the atmosphere, benzene emissions can occur. This equipment is covered only by the benzene equipment leak standards.

The benzene standards require each product accumulator vessel to be equipped with a closed-vent system capable of capturing and transporting any leakage from the vessel to a control device. Acceptable control devices include vapor recovery systems, enclosed combustion devices, or flares. These control systems are described in Section 3.10.

3.9 Agitators

Agitators are used to stir or blend chemicals. Like pumps and compressors, agitators may leak organic chemicals at the point where the shaft penetrates the casing. Consequently, seals are required to minimize fugitive emissions. Four seal arrangements commonly are used with agitators: compression packing (packed seal), mechanical seals, hydraulic seals, and lip seals. Packed seals for agitators are very similar in design and application to packed seals for pumps (Ramsey and Zoller, 1976).

Although mechanical seals are more costly than the other three types of seals, they offer a greatly reduced leakage rate to offset their higher cost. Furthermore, the maintenance frequency of mechanical seals is one-half to one-fourth that of packed seals. At pressures greater than 1,140 kPa (150 psig), the leakage rate and maintenance frequency are so superior that the use of packed seals on agitators is rare. As with packed seals, the mechanical seals for agitators are similar in design and application to the mechanical seals for pumps.

The hydraulic seal, which is the simplest and least used agitator shaft seal, has an annular cup attached to the process vessel that contains a liquid that is in contact with an inverted cup attached to the rotating agitator shaft. The primary advantage of this seal is that it is a noncontact seal. Use of this seal, however, is limited to low temperatures and pressures and very small pressure fluctuations. In addition, organic chemicals may contaminate the seal liquid and then be released into the atmosphere as fugitive emissions.

A lip seal can be used on a top-entering agitator as a dust or vapor seal. The sealing element is a spring-loaded elastomer. Lip seals are relatively inexpensive and easy to install. Once the seal has been installed, the agitator shaft rotates in continuous contact with the lip seal. Pressure limits of the seal are 2 to 3 psig because it operates without lubrication, and operating temperatures are limited by the characteristics of the elastomer. Fugitive emissions can be released through this seal when the seal wears excessively or the operating pressure surpasses the pressure limits of the seal.

3.10 Closed-Vent Systems and Control Devices

A closed-vent system can be used to collect and dispose of gaseous VOC emissions from seal oil degassing vents, pump and compressor seal leakage, relief valve leakage, and relief valve discharges because of over-pressure operation. A closed-vent system consists of piping connectors, flame arrestors, and, if necessary, flow-inducing devices. Closed-vent systems are designed and operated so that all VOC emissions are transported to a control device without leakage to the atmosphere.

Several types of control devices can be used to dispose of VOC and VHAP emissions captured in the closed-vent system. Incineration, carbon adsorption, and condensation are three control methods that typically are applied. Control efficiencies of the three methods are dependent on specific operating characteristics and the types of emissions being generated. Typically, enclosed combustion devices (boilers, process heaters, and thermal and catalytic incinerators) can achieve better than 95 percent destruction efficiencies. The key parameters affecting destruction efficiency are residence time and temperature. Carbon adsorption systems can achieve 95 to 99 percent control efficiency through proper design and operation, while condensation systems can achieve capture efficiencies of 90 percent or more.

Flares commonly found at plants subject to these standards include steam-assisted, air-assisted, non-assisted, ground, and dual-flare systems. Certain flares have demonstrated destruction efficiencies equal to those of enclosed combustion devices provided certain design specifications (heat content and exit velocity) are met (U.S. EPA, 1985).

3.11 References

When an NTIS number is cited in a reference, that document is available from:

National Technical Information Service
5285 Port Royal Road
Springfield, VA 22161
703-487-4650

Nelson, W.E. 1977. Compressor seal fundamentals. Hydrocarbon Processing 56(12):91-95. December.

Perry, R.H. and C.H. Chilton. 1978. Chemical Engineer's Handbook, 5th Edition. McGraw-Hill Book Company, New York, NY. pp. 6-8.

Pikulik, A. 1978. Manually operated valves. Chemical Engineering 85(7):121. April 3. pp. 3-23, 3-24.

Ramsden, J.H. 1978. How to choose and install mechanical seals. Chemical Engineering 85(22):97-102. October 9.

Ramsey, W.D. and G.C. Zoller. 1976. How the design of shafts, seals and impellers affects agitator performance. Chemical Engineering 83(18):101-108. August 30.

Templeton, H.C. 1971. Valve installation, operation and maintenance. Chemical Engineering 78(23):141-149. October 11.

U.S. EPA. 1990. U.S. Environmental Protection Agency. Inspection techniques for fugitive VOC emission sources: Course module S380. Student's manual. EPA-340/1-90-026a. Washington, DC. September.

U.S. EPA. 1985. U.S. Environmental Protection Agency. Polymer manufacturing industry: Background information for proposed standards. EPA-450/3-83-019a. NTIS PB88-114996. Research Triangle Park, NC. September.

U.S. EPA. 1984. U.S. Environmental Protection Agency. Fugitive VOC emissions in the synthetic organic chemicals manufacturing industry. EPA-625/10-84-004. Research Triangle Park, NC, and Cincinnati, OH. December.

U.S. EPA. 1980a. U.S. Environmental Protection Agency. VOC fugitive emissions in synthetic organic chemicals manufacturing industry: Background information for proposed standards. EPA-450/3-80-033a. NTIS PB81-152167. Research Triangle Park, NC. November.

U.S. EPA. 1980b. U.S. Environmental Protection Agency. Benzene fugitive emissions: Background information for proposed standards. EPA-450/3-80-032a. NTIS PB81-151664. Research Triangle Park, NC. November.

Chapter 4
Monitoring Requirements

To comply with equipment leak standards, a monitoring or screening program to identify leaking components must be implemented. Screening equipment for potential leaks is fundamental to LDAR programs, and information generated by screening programs also supports recordkeeping and reporting programs (described in Chapter 5) that are necessary for demonstrating compliance with the regulations.

Presented in this chapter are protocols and methodologies for screening equipment components with a portable organic analyzer. To give the perspective of a unit-wide screening plan, the overall survey procedure is presented first. Then, selecting an appropriate portable monitoring instrument is discussed, and screening protocols are given for the different equipment components subject to LDAR programs. The chapter concludes with a brief discussion on data handling and calibration procedures for quality assurance.

Table 4-1. Fugitive Emission Sources (U.S. EPA, 1988)

Equipment Types
Pump seals
Compressor seals
Valves
Pressure relief devices
Sampling connections
Flanges, screwed connections, etc.
Open-ended lines
Drains, vents, doors
Agitator seals
Service
Gas/vapor
Light liquid
Heavy liquid

4.1 Overall Survey Procedure

The screening survey first must define precisely the process unit boundaries. This definition is usually straightforward, but sometimes multiple units share facilities. A process unit is the smallest set of process equipment that can operate independently and includes all operations necessary to achieve its process objective. The survey should document the exact basis for the unit definition, and a plot plan of the unit should be marked with the appropriate boundaries. To screen the equipment in a unit, all equipment to be included in the unit needs to be identified. A list of equipment types that are subject to LDAR programs is provided in Table 4-1 (U.S. EPA, 1988). Not all facilities will contain each of these equipment components. Also identified in Table 4-1 are the types of sources in which these equipment components might be found.

The next step is to obtain a simplified process flow diagram and note the process streams. The screening and data collection can be done most systematically by following each stream. For instance, a logical starting point is where the feed line enters the process boundary. The screening team follows that line, screening all sources, until its termination at the flanges of a reactor or separation step.

Each source that has been screened should be clearly marked, for example, with weatherproof, corrosion-resistant, and readily visible identification. Alternatively, a process unit is appropriately identified if the unit has a system of markings, with an associated diagram, that allows easy location of marked sources.

Once all of the equipment along the major streams has been screened, the unit should be divided into a grid to search for fittings missed on the initial survey. The unit survey is complete when all sources in the unit have been either screened or identified as nonhydrocarbon components. Leakless equipment and equipment not in VOC (or VHAP) service should not be included in the survey. Equipment documented as inaccessible, however, should be included in the survey; under equipment leak standards, such equipment must be screened annually.

Consistent with equipment leak standards for hazardous air pollutants, unsafe-to-monitor components do not need to be included in the survey. Documentation must

be provided, however, to substantiate the unsafe nature of such equipment.

Although equipment leak standards only address specific pieces of equipment to be monitored, additional factors might be important to monitoring program organization. Some factors to consider include measures to identify sources not accessible to routine monitoring; steps to avoid missing pieces of equipment that should be monitored; and consideration of additional applications of the data generated, such as developing emission estimates (see Chapter 7).

4.2 Monitoring Instruments

Many portable VOC detection analyzers can measure leaks from equipment components. These devices operate on a variety of principles, but the three most common are ionization, infrared absorption, and combustion. Any analyzer can be used provided it meets the specifications and performance criteria in EPA Reference Method 21 (see Appendix C). All analytical instruments are permitted provided they are shown to measure the organic compounds of interest and the results are related to EPA's data base, which was generated using a flame ionization detector (FID), calibrated to methane (U.S. EPA, 1981a,b; 1980). Response factors (RFs) must be developed for analytical instruments referenced to compounds other than methane (see Section 4.2.2.1) to relate screening values to actual monitored chemical concentrations. This alternative allows the use of many instruments that cannot be calibrated with methane.

4.2.1 Operating Principles and Limitations of Portable VOC Detection Devices

Ionization detectors operate by ionizing the sample and then measuring the charge (number of ions) produced (U.S. EPA, 1986, 1988, pp. 3-4 and 3-5). Flame ionization and photoionization are two methods of ionization currently used. A standard FID usually measures the total carbon content of the organic vapor sampled, which means that an FID reading is nonspecific for gas mixtures. An FID also may be used as a detector for a gas chromatograph (GC) to measure concentrations of individual organic components. Carbon monoxide (CO) and carbon dioxide (CO_2) do not produce interferences, although FID analyzers do react—at a low sensitivity—to water vapor. Furthermore, if water condenses in the sample tube, erratic readings can result. A filter is used to remove particulate matter from the sample. Certain organic compounds containing nitrogen (N), oxygen (O), or halogen atoms give a reduced response when sampled with an FID, and some organics might not give any response at all. For this reason, RFs must be developed for each compound that is to be measured. See Section 4.2.2.1 for a discussion of RFs.

Photoionization detectors (PIDs) use ultraviolet light (instead of a flame) to ionize organic vapors. As with FIDs, the detector response varies with the functional group in the organic compounds. PIDs have been used to detect leaks in process units used in SOCMI, especially for compounds such as formaldehyde that do not give a response on an FID or combustible detector.

Nondispersive infrared (NDIR) instruments measure light absorption characteristics of gases. NDIR instruments usually are subject to interference from other gases such as water vapor and CO_2 that may absorb light at the same wavelength as a compound of interest. These detectors generally are used only for the detection and measurement of single components. To detect and measure single components, the wavelength at which a certain compound absorbs infrared radiation is predetermined, and the device is preset for that specific wavelength using optical filters. For example, if set to a wavelength of 3.4 micrometers, infrared devices can detect and measure petroleum fractions, including gasoline and naphtha.

Combustion analyzers are designed to measure either the thermal conductivity of a gas or the heat produced by combusting the gas. The most common method used in portable combustion analyzers is measuring the heat of combustion—these devices are referred to as hot-wire detectors or catalytic oxidizers. Combustion analyzers, like most other detectors, are nonspecific for gas mixtures. In addition, combustion analyzers exhibit reduced response (or, in some cases, no response) to gases that are not combusted readily, such as formaldehyde and carbon tetrachloride.

4.2.2 Performance Criteria and Evaluation for Portable VOC Detectors

As stated earlier, any portable VOC detector may be used as a screening device provided it meets the performance criteria specified in Reference Method 21 (see Appendix C). Although portable detectors can be applied to many organic compounds, they cannot be applied universally. Facilities may need to develop an alternative method for testing some organic compounds. A discussion of the performance criteria for portable VOC detectors is presented in the following section and summarized in Table 4-2 (40 CFR Part 60). In addition to the performance criteria, Reference Method 21 requires that the analyzer meet these specifications:

- The VOC detector shall respond to those organic compounds being processed (determined by the RF).
- The analyzer shall be capable of measuring the leak definition specified in the regulation (i.e., 10,000 ppmv or "no detectable limit").

Table 4-2. Performance Criteria for Portable VOC Detectors*

Criteria	Requirement	Time Interval
Instrument response factor	Must be less than 10 unless correction curve is used	One time, before detector is put in service.
Instrument response time	Must be less than or equal to 30 seconds	One time, before detector is put in service. If modification to sample pumping or flow configuration is made, a new test is required.
Calibration precision	Must be less than or equal to 10% of calibration gas value	Before detector is put in service and at 3-month intervals or next use, whichever is later.

* From 40 CFR Part 60, Appendix A. Reference Method 21, "Determination of Volatile Organic Compound Leaks."

- The scale of the analyzer shall be readable to ±5 percent of the specified leak definition concentration.
- The analyzer shall be equipped with a pump so that a continuous sample is provided at a nominal flow rate of between 0.5 and 3.0 liters per minute.
- The analyzer shall be intrinsically safe for operation in explosive atmospheres.

Criteria for the calibration gases to be used also are specified. Two or more gases are required for analyzer performance evaluation: a zero gas, which is air with less than 10 ppmv VOCs; and calibration gases (or reference gases), which use reference compounds in air mixtures. The concentration of the reference gas should represent the range of responses measured. To develop unit-specific emission estimates, a reference gas for the appropriate range should be selected.

4.2.2.1 Response Factors

When an analyzer is calibrated with a reference gas, an equivalent response will not be obtained for other gases because the analyzer responds differently to different compounds. An RF is required to provide an accurate relationship between a calibrated analyzer and another compound. If an FID is calibrated for methane, for example, a direct reading from the instrument assumes equivalent responses for methane and any other compound. The RF helps to quantify how the analyzer responds differently toward each compound (U.S. EPA, 1992a). The RF is defined by the following equation:

$$\text{Response Factor} = \frac{\text{Actual concentration of compound}}{\text{Observed concentration from detector}}$$

An RF of 1.0 means that the instrument readout is identical to the actual concentration of the chemical in the gas sample. A higher RF results in an instrument readout that is proportionally lower than the actual concentration. A high RF means that a given instrument does not detect a compound very well. The following examples illustrate this definition (U.S. EPA, 1990).

Example 1:

Actual concentration = 10,000 ppmv

Instrument gauge reading = 5,000 ppmv

Response factor = 2

Example 2:

Actual concentration = 1,000 ppmv

Instrument gauge reading = 3,000 ppmv

Response factor = 0.33

Example 3:

Actual concentration = 100,000 ppmv

Instrument gauge reading = 10,000 ppmv

Response factor = 10

If the regulatory limit is 10,000 ppmv (observed), the use of an instrument with an RF of 10 for the specific chemical(s) would allow an actual concentration of 100,000 ppmv. Conversely, the use of an instrument with an RF of 0.1 would indicate that the regulatory limit of 10,000 ppmv had been exceeded when the actual concentration is only 1,000 ppmv. Typical RFs range from 0.1 to 40. The lower the RF, the more sensitive a given instrument is for a specific type of organic compound.

In accordance with Reference Method 21, only instruments with RFs of less than 10 for the monitored organic compounds may be used for leak detection. The RF must be determined either by consulting published tabular data provided by instrument manufacturers or EPA, or, alternatively, by laboratory testing the specific instrument being used with the chemicals of interest. Although, the latter approach is more accurate, it is very expensive for the instruments that are used for many compounds. Manufacturers of portable analyzers include information in their manuals about RFs or multipliers used to correct the instrument measurement. The information from the manuals, however, is basic background theory and is not explicit (U.S. EPA, 1992a).

The RF may be used as a guide in selecting an appropriate monitoring device. For example (see Appendix D, Table D-1), when screening equipment in a process unit containing cumene, an FID can be used

directly, with no correction for RF (RF = 1.87); while the catalytic oxidation detector cannot be used (RF has no value). Similarly, from the same data (Appendix D, Table D-2), neither of these devices would be capable of detecting leaks from a source containing carbon tetrachloride if RF adjustments were not used (U.S. EPA, 1981a).

If RFs have been published for the compounds of interest for the combination of detector and calibration gas desired, the RF determination is not required, and existing results may be referenced. Results of several studies developing RFs of portable analyzers are presented in Tables D-1 and D-3 through D-5, Appendix D (U.S. EPA, 1981a, 1982; Analytical Instrument Development, Inc., no date). These RFs can be used when determining if a screening concentration is above or below 10,000 ppmv. (The values are for pure organic chemicals only.) Presented in Table D-2 of Appendix D are tested compounds that appear unable to achieve an instrument response of 10,000 ppmv at any feasible concentration unless RFs are used (U.S. EPA, 1981a). These single RFs are adequate for RF adjustments when using a portable VOC detector as a screening device.

4.2.2.2 Response Time

The response time of an analyzer refers to the ability of the instrument to respond to the presence of a VOC concentration. Response time is defined as the time interval from a step change in VOC concentration at the input of a sampling system to the time at which 90 percent of the corresponding final value is reached as displayed on the analyzer readout meter. The response time must be equal to or less than 30 seconds, and it must be determined for the analyzer configuration that will be used during testing. The response time must be tested before placing an analyzer in service. If a modification to the sample pumping system or flow configuration is made that would change the response time, a new response time test is required before continuing the screening program.

4.2.2.3 Calibration Precision

Calibration precision is the degree of agreement between measurements of the same known value. To ensure that the readings obtained are repeatable, a calibration precision test must be completed before placing the analyzer in service and at 3-month intervals or the next use, whichever is later. The calibration precision must be less than or equal to 10 percent of the calibration gas value.

To test calibration precision, a total of three measurements are required for each nonzero concentration. Measurements are made by first introducing zero gas and adjusting the analyzer to zero. Then, the specific calibration (reference) gas is introduced and the meter reading is recorded. Next, the average algebraic difference between the meter readings and the known value of the calibration gas is computed. This average difference is divided by the known calibration value and multiplied by 100 to express the resulting calibration precision as percent.

4.2.2.4 Safety

In hazardous locations, such as petroleum refineries and bulk gasoline terminals, portable instruments are required to detect VOC emissions from equipment leak sources. The National Electrical Code requires that instruments used in hazardous locations are certified to be explosion-proof and intrinsically safe to operate in defined hazardous locations.

Hazardous locations are divided into three classes: Class I, Class II, and Class III. Each class is divided into two divisions (Division 1 or 2) according to the probability that a hazardous atmosphere will be present, and divisions are separated into seven groups depending on the type of hazardous material exposure. Groups A through D are flammable gases or vapors, and Groups E, F, and G apply to combustible or conductive gases. Class I, Division 1, Groups A, B, C, and D locations are those in which hazardous concentrations of flammable gases or vapors might exist under normal operating conditions. Class I, Division 2, Groups A, B, C, and D locations are those in which hazardous concentrations of flammable gases or vapors might exist only under unlikely conditions of operation.

As of 1992, over a dozen manufacturers produced portable VOC detection instruments that are certified as intrinsically safe (Analytical Instrument Development, Inc., no date). Listed in Table 4-3 are the manufacturers, instrument model numbers, instrument certification categories, and performance specifications for these instruments. Newer instruments also might be available that meet the performance requirements for generating emission estimates.

4.2.3 Monitoring Devices for Difficult Situations

In some cases, a monitoring device might not be available that meets all of the performance specifications of Reference Method 21. For example, in the case of phosgene, the RF at 10,000 ppmv is greater than 10. The instrument might meet all other requirements, but fails as a Method 21 instrument because it cannot meet the RF requirement. The instrument still can be used to screen for equipment leaks, however, provided the instrument is shown to be sufficiently reliable in

Table 4-3. Portable VOC Detection Instrument Performance Specifications (U.S. EPA, 1992b)

Flame Ionization Analyzers

		Method 21 Criteria							
		Meets Leak Definition		5% Definition at Leak Level					
Manufacturer	Model	500 ppmv	10,000 ppmv		Instrinsically Safe	Response Time (sec)	0.25-in. o.d. Probe	Sample Flow (L/min)	Comments
The Foxboro Company	OVA 88	no	yes	yes	no	2	yes	2.0	
	OVA 108	no	yes	yes	yes	2	yes	2.0	
	OVA 128	yes	no	yes*	yes	2	yes	2.0	6
Heath Consultants, Inc.	DP-III	yes	yes	yes	no*	3	yes	2.0	2
	DP-II	yes	no	no	no*	3	yes	2.5	3
	PF-II	yes	no	yes*	no*	2	yes	0.7	4,6
MSA/Baseline Industries, Inc.	GasCorder FID	no	no*	no*	no*	3	yes	0.5	5
Sensidyne, Inc.	Portable FID	yes	yes	yes	no*	3	yes	1.25	1
Thermo Environmental Instruments, Inc.	710	yes	no	no	no	5	yes	1.5	
	712	yes	yes	yes	no	5	yes	1.5	

* = See Comments.

Comments:
1. Working on making intrinsically safe instrument.
2. Plans are under way to make DP III intrinsically safe.
3. Plans are under way to make DP II intrinsically safe.
4. Currently being modified to be intrinsically safe.
5. Will reach market 9/91 and will be redesigned to meet Class I, Division 1 and 2 standards by approximately 12/92.
6. Five percent definition at 500 ppmv leak level.

Flame Ionization Analyzers

Manufacturer	Model	Calibration Gas	Maximum Range (ppmv)	Battery/Fuel Life (hr)	Dimensions (in.) and Weight (lb)	Temperature (Celsius)	Price* ($)	Comments
The Foxboro Company	OVA 88	Methane	0-100,000	8	9 x 12 x 4, 11	10 to 40	4,400	1
	OVA 108	Methane	0-10,000	8	9 x 12 x 4, 12	10 to 40	6,600	2
	OVA 128	Methane	0-1,000	8	9 x 12 x 4, 12	10 to 40	6,600	3
Heath Consultants, Inc.	DP-III	Methane	0-10,000	8	3.5 x 7 x 10, 7	-20 to 48	3,200	7
	DP-II	Methane	0-1,000	8	11 x 7 x 9, 9	-20 to 48	4,000	8
	PF-II	Methane	0-5,000	10	3 x 10 x 9, 6.3	-20 to 48	2,500	9
MSA/Baseline Industries, Inc.	GasCorder FID	Methane	0-10,000**	8	17 x 11.2 x 8, 18.5	5 to 35	6,800	10
Sensidyne, Inc.	Portable FID	Methane	0-10,000	15	14.5 x 4.6 x 9.3, 6.5	-5 to 40	4,800	6
Thermo Environmental Instruments, Inc.	710	Methane	0-2,000	8	10 x 4 x 8.5 (Case)	0 to 40	5,800	4
	712	Methane	0-20,000	8	6.5 x 6.1 x 4 (Gun) 14 total	0 to 40	5,800	5

* = Approximate base unit price 8/91.
** = See Comments.

Comments:
1. The OVA 88 is primarily for natural gas leak detection. Logarithmic analog scale.
2. Generally accepted as the industry standard. Logarithmic analog scale.
3. GC option ($1,200) for qualitative analysis. Three scales 0-10, -100, -1,000. Linear analog scale.
4. Three scales 0-200, -2,000, -20,000. Digital readout.
5. Three scales 0-2,000, -20,000, -200,000. Digital readout.
6. Two scales 0-1,000, 0-10,000. Analog scale.
7. Five scales maxima of 10, 50, 100, 1,000, and 10,000.
8. Five scales maxima of 10, 50, 100, 500, and 1,000.
9. Three scales 0-50, 0-500, 0-5,000. Analog scale.
10. Dedicated air and hydrogen cylinders. Data logging capabilities.

Table 4-3 (continued)

Photoionization Analyzers

Manufacturer	Model	Method 21 Criteria: Meets Leak Definition 500 ppmv	Meets Leak Definition 10,000 ppmv	5% Definition at Leak Level	Instrinsically Safe	Response Time (sec)	0.25-in. o.d. Probe	Sample Flow (L/min)	Comments
HNu Systems, Inc.	IS-101	yes	no	no	yes	3	yes	0.17	
	DL-101-2	yes	no	no	no*	3	yes	0.25	1
	DL-101-4	yes	no	yes*	no*	3	yes	0.25	1,4
MSA/Baseline	GasCorder	yes	no*	yes*	no*	3	yes	0.5	3,4
	PID	yes							
MSA International	Photon	yes	no	yes*	no*	3	yes	0.5	1,4
Sentex Sensing Technology, Inc.	Scentogun	yes	no	yes*	no	2	yes*	0.1	2,4
Thermo Environmental Instruments, Inc.	580-S	yes	no	yes*	yes	2	yes	0.4	4
	580-B	no	no	no	no	2	yes	0.4	

* = See Comments.

Comments:
1. Class I, Division 2 certified.
2. Meets Method 21 probe size criteria only when used with optional extension.
3. Will be redesigned approximately 12-18 months after it reaches the market (9/91) to meet Class I, Division 1 and 2 requirements.
4. Five percent definition at 500 ppmv leak level.

Photoionization Analyzers

Manufacturer	Model	Calibration Gas	Maximum Range (ppmv)	Battery/Fuel Life (hr)	Dimensions (in.) and Weight (lb)	Temperature (Celsius)	Price* ($)	Comments
HNu Systems, Inc.	IS-101	Benzene, Isobutylene	0-2,000	8	8 x 5 x 9, 10	-15 to 40	5,000	1
	DL-101-2	Benzene	0-2,000	8	8 x 3 x 6, readout 4	40 max	4,900	2
	DL-101-4	Benzene	0-2,000	8	8 x 3, probe 3 8 x 3 x 6, readout 4	40 max	5,500	3
MSA/Baseline	GasCorder PID	Benzene	0-2,000**	8	17 x 8 x 8, 10	5 to 35	5,000	7
MSA International	Photon	Isobutylene	0-2,000	8	16.9 x 3.8 x 5.8, 7	0 to 40	5,000	5
Sentex Sensing Technology, Inc.	Scentogun	Benzene	0-2,000	6	9 x 6 x 4, 4	None supplied	3,750	6
Thermo Environmental Instruments, Inc.	580-S	Benzene	0-2,000	8	6.75 x 5.75 x 10, 7.5	5 to 40	5,300	4
	580-B	Benzene	0-2,000	8	6.8 x 5.8 x 10, 6	5 to 40	4,400	4

* = Approximate base unit price 8/91.
** = See Comments.

Comments:
1. Basic instrument is PI-101. The HW-101 (Hazardous Waste) is Class I, Division 2 certified. Analog readout, three scales.9.5, 10.2, 11.7 eV lamps.
2. DL-101-2 has two modes of operation, data logging capabilities, digital readout, 9.5, 10.2, 11.7 eV lamps.
3. DL-101-4 has four modes of operation, data logging capabilities, digital readout, 9.5, 10.2, 11.7 eV lamps.
4. Digital display, data logging capabilities, optional bar code reader interface.
5. Digital display, data logging capabilities, 10.6 eV lamp.
6. Digital display, 10.6, 11.5 eV lamps.
7. Dilution system available. 8.4, 9.6, 10.2, 10.6, 11.8 eV lamps. Data logging capabilities.

Table 4-3 (continued)

Infrared, Electrochemical, and Solid State Analyzers

		Method 21 Criteria							
		Meets Leak Definition		5% Definition at Leak Level					
Manufacturer	Model	500 ppmv	10,000 ppmv		Instrinsically Safe	Response Time (sec)	0.25-in. o.d. Probe	Sample Flow (L/min)	Comments
AIM USA	1300	yes	yes	yes	yes	1	yes*	1.5	5
	3300	yes	yes	yes	yes	1	yes*	1.5	5
Arizona Instrument	Jerome 431X	no	no	no	no	13	yes	0.750	3
	Jerome 631X	no	no	no	no	6	yes	0.150	4
Bacharach, Inc.	TLV sniffer	yes	yes	yes	yes	<30	yes	1.75	
	MV-2	no	no	no	no	5	yes	N/A	2
CEA Instruments, Inc.	Gaseeker GS4	yes	yes	no	yes*	<10	yes	0.3	6
The Foxboro Company	MIRAN 1Bx	yes	no	yes*	yes	Compound dependent	no	30	1
Gas Tech, Inc.	1238	yes	no	yes*	yes*	<10	yes	0.47	7
	4320	yes	no	yes*	yes*	<10	yes	1.0	7
	GP-116	no	yes	yes	no*	5	yes	2.0	8
McNeil International	Gasurveyor 4	yes	no	yes*	yes	5	yes	0.5	

* = See Comments.

Comments:
1. Internal library of approximately 115 compounds.
2. No sample flow given.
3. Scale reads in milligrams per cubic meter.
4. Four scales 1-1000 ppbv, 0.1-1.0 ppmv, 1-10 ppmv, and 10-50 ppmv. Response time varies by scale and mode setting (survey mode times given).
5. Meets Method 21 criteria only when used with optional sample pump attachment.
6. BASEEFA certification is pending.
7. Intrinsically safe Class I, Division 1, Groups C and D.
8. Submitted for UL safety approval.
9. Leak definition at 500 ppmv.

Infrared, Electrochemical, and Solid State Analyzers

Manufacturer	Model	Calibration Gas	Maximum Range (ppmv)	Battery/Fuel Life (hr)	Dimensions (in.) and Weight (lb)	Temperature (Celsius)	Price* ($)	Comments
AIM USA	1300	Methane	0-50,000	7.5	18 x 2 dia, 4.5	0 to 50	1,200	5
	1300	Benzene	0-50,000	7.5	18 x 2 dia, 4.5	0 to 50	2,200	5
Arizona Instrument	Jerome 431X	N/A	0-0.999 (mg/m^3)	6	6 x 13 x 4, 7	0 to 40	5,900	4
	Jerome 631X	N/A	0-50	6	6 x 13 x 4, 7	0 to 40	9,900	4
Bacharach, Inc.	TLV sniffer	Hexane	0-10,000**	8	9 x 3.75 x 6.6, 5	10 to 49	1,840	2
	MV-2	N/A	0-1.0 (mg/m^3)	4	11.4 x 4.8 x 4.4, 6	N/A	3,300	3
CEA Instruments, Inc.	Gaseeker GS4	Methane	0-10,000	10	3 x 6 x 6, 0.3	-10 to 50	1,200	6
The Foxboro Company	MIRAN 1Bx	**	**	4	27 x 9 x 11, 28	5 to 40	17,100	1

Table 4-3 (continued)

Infrared, Electrochemical, and Solid State Analyzers (continued)

Manufacturer	Model	Calibration Gas	Maximum Range (ppmv)	Battery/Fuel Life (hr)	Dimensions (in.) and Weight (lb)	Temperature (Celsius)	Price* ($)	Comments
Gas Tech, Inc.	1238	Hexane	0-1,000	8	12 x 3.8 x 5.5, 8	-12 to 49	1,300	7
	4320	Hexane	0-2,000	8	12 x 3.8 x 5.5, 8	-12 to 49	2,600	8
	4320	Hexane	0-2,000	8	12 x 3.8 x 5.5, 8	-10 to 40	<5,000	9
McNeil International	Gasurveyor 4	**	0-1,000	15	7 x 3.8 x 4.1, 3.5	-20 to 50	1,900	10

* = Approximate base unit price 8/91.
** = See Comments.

Comments:
1. Infrared. Internal library of approximately 115 compounds. Calibration ranges from 0-10 ppmv to 0-2,000 ppmv. Digital readout. Infrared instrument.
2. Range can be expanded to 0-100,000 ppmv with 10:1 dilution probe option.
3. Mercury vapor detector only. Digital readout.
4. Digital readout, data logging capabilities, software optional.
5. Digital readout with data logging capabilities. PC software optional.
6. Logarithmic LED scale, not defined enough at 95% for Method 21.
7. Analog meter, also reads 0-100% LEL combustibles.
8. Analog meter, also reads 0-100% LEL combustibles, 0-25% oxygen, 0-100 ppmv H S, and 0-300 ppmv CO .
9. Digital readout, data logging system with integral bar code pen. 25,000 and 50,000 ppmv ranges available.
10. Electronically calibrated.

providing data that can be related to EPA's data collected using an organic vapor analyzer (OVA) calibrated to methane.

Several initial steps must be taken to document the viability of a device that fails to meet the Method 21 requirements. First, a laboratory program must demonstrate the response of the monitoring instrument to the compounds being measured. This response must be documented. The second step is relating the instrument response (i.e., screening value) to actual concentrations to develop an instrument response curve. The screening value response curve must be developed for the entire screening value range and documented so that screening values taken in the field can be adjusted to actual concentrations. Third, the testing program should be sufficiently well documented to demonstrate how the instrument will be used in the screening program. For example, if the response time of the candidate instrument exceeds the Method 21 performance specification, the test plan should reflect added screening time at each potential leak point to be screened. Once this laboratory demonstration is completed and the screening value correction curve is established, the screening can begin.

4.3 Screening Protocols

4.3.1 Calibration

Before screening begins, the monitoring instrument must be calibrated (U.S. EPA, 1988, p. 3-22). The VOC analyzer is assembled and started up according to the manufacturer's instructions. After the appropriate warmup period, the person performing the test should introduce zero gas into the sample probe, and set the instrument meter readout to zero. He or she then should introduce the calibration gas into the sample probe, and adjust the instrument meter readout to correspond to the calibration gas value. If the meter readout cannot be adjusted to the proper value, a malfunction of the instrument is indicated, and corrective measures should be taken before the instrument is used. The operator's manual for each instrument might help determine the cause of the malfunction. Also, verifying that the calibration gas contains the rated concentration of gas might be appropriate.

4.3.2 Procedure for Screening Equipment

The mechanics of the screening operation outlined in Reference Method 21 are summarized in the following discussion (U.S. EPA, 1992a). The operator places the probe inlet at the surface of the leak interface where leakage could occur. (The leak interface is the boundary between the process fluid and the atmosphere.) The probe must be perpendicular, not tangential, to the leak interface so that inaccurate readings do not result. Then the probe should be moved along the interface periphery while the instrument readout is observed. If the meter reading increases, the operator moves the probe slowly along the interface where leakage is indicated until the maximum meter reading is obtained. The probe inlet should be left at this maximum reading location for approximately two times the instrument

response time. The screening value is the maximum recorded reading.

The instrument measurement might exceed the scale of the instrument. For example, the reading might exceed 10,000 ppmv when using an OVA analyzer. To generate an emission estimate, these higher readings also must be recorded. A dilution probe should be used to allow measurement of concentrations greater than the instrument's normal range. The OVA can be equipped with a dilution probe that permits measurement of concentrations up to 100,000 ppmv. Extending the measurement range also requires calibrating the instrument to the higher concentrations.

Fouling of the probe with grease, dust, or liquids should be avoided. A short piece of Teflon tubing can be used as a probe tip extender and snipped off as the tip fouls. In areas with a noticeable particulate loading, this tubing can be packed with untreated fiberglass to act as a filter. (The instrument also must be calibrated with this filter in place.) If a surface to be screened is obviously dirty, the probe tip can be held just over the surface to avoid scooping up contaminants. While some fouling is unavoidable, cleaning the sintered steel filter probe tip at least daily and the side-pack filter weekly is recommended. Normally, these filters can be cleaned by rapping them lightly on a table top, but if the deposits are wet and caked on, washing with an aqueous solution of soap and alcohol is recommended. This solution also can be used to wash the probe and transfer line periodically. In addition, the equipment should be blown dry before reuse. These general procedures can be used when screening equipment such as valves; flanges; pumps and compressors; pressure relief devices; and other potential sources of VOC leakage such as process drains, open-ended lines, or valves.

4.3.2.1 Valves

For valves, the most common leak source is at the seal between the stem and housing. To screen this source, the operator should place the probe where the stem exits the packing gland, and move it around the stem circumference. The screening value is the maximum recorded reading. Also, the probe should be placed at the packing gland take-up flange seat, and moved along the periphery. Valve housings of multipart assemblies also should be screened at the surface of all points where leaks could occur. Primary valve maintenance points are illustrated in Figure 4-1. (See also Figures 3-10 through 3-14 for additional illustrations of various valve types.)

4.3.2.2 Flanges

For flanges, the probe should be placed at the outer edge of the flange-gasket interface, and the circumference of the flange sampled. For screwed flanges, the threaded connection interface also should be screened. Other types of nonpermanent joints, such as threaded connections, should be sampled with a similar traverse.

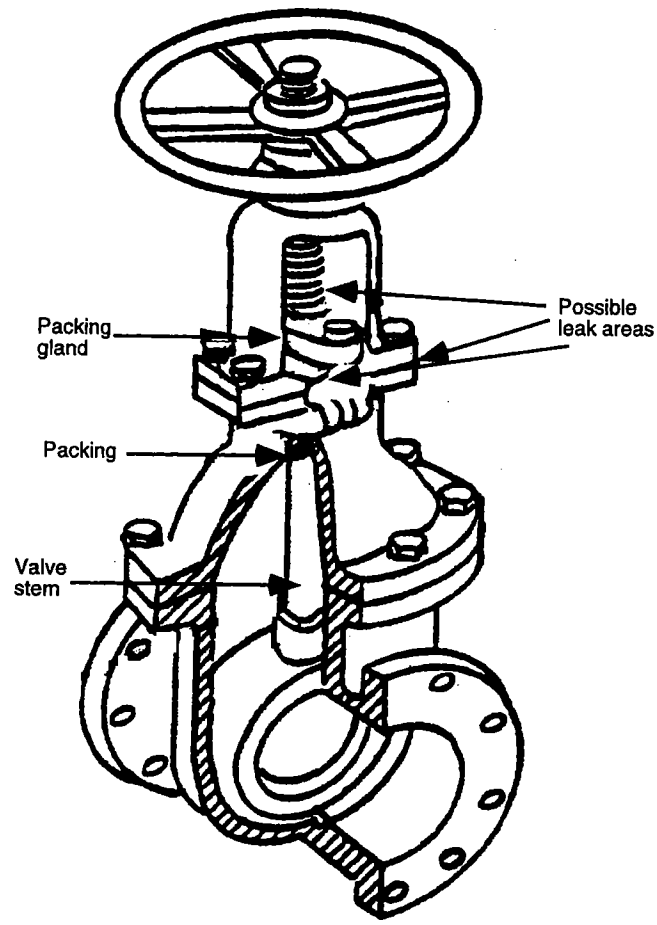

Figure 4-1. Primary valve maintenance points.

4.3.2.3 Pumps and Compressors

Pumps and compressors are screened with a circumferential traverse at the outer surface of the pump or compressor shaft and seal interface where the shaft exits the housing. If the source is a rotating shaft, the probe inlet can be positioned within 1 cm of the shaft-seal interface. If the housing configuration prevents a complete traverse of the shaft periphery, all accessible portions should be sampled, as well as all other joints on the pump or compressor housing where leakage could occur. (Pump and compressor seal mechanisms and potential leak areas are illustrated in Figures 3-1 through 3-6.)

4.3.2.4 Pressure Relief Devices

The configuration of most pressure relief devices prevents sampling at the sealing seat. Because of their design and function, pressure relief devices must be

approached with extreme caution. These devices should not be approached during process upsets, or at other times when they are likely to activate. Similarly, operators should avoid interfering with the working parts of the device (e.g., the seal disc and the spring) when screening pressure relief devices. For those devices equipped with an enclosed extension or horn, the probe inlet should be placed at approximately the center of the exhaust area to the atmosphere. Again, only the probe should be placed in the horn; personnel conducting the screening should not place hands, arms, or any other body parts into the horn. (See Figures 3-7 and 3-8 for illustration of screening points for a spring-loaded relief valve.)

4.3.2.5 Other Sources

Fugitive leaks from most other sources (e.g., process drains, seal system degassing vents, and accumulator vents) are emitted through a regularly shaped opening. If an opening is very small (e.g., sampling lines of less than 1-inch diameter), a single reading in the center of the opening is sufficient. For larger openings (e.g., a 6-inch drain mouth), one must traverse the perimeter of the opening and read the concentration at the center. For even larger sources (e.g., a wash-up drain grate), a grid of readings should be taken on about 6-inch centers. For access door seals, the probe inlet is placed at the surface of the door seal for a peripheral traverse. For all of these types of equipment, the screening concentration is the maximum recorded value.

4.4 Data Handling

To handle the screening data uniformly, data should be recorded on prepared data sheets. The data collected should include:

- Date.
- Hydrocarbon detector type.
- Source identification (ID). (If permanent IDs are not in place, IDs should be assigned consecutively as each source is screened. The first source screened is assigned ID1, the second source screened is assigned ID2, etc.)
- Record screening value in ppmv.
- Source type (e.g., type of valve, pump, compressor, flange).
- Service (e.g., gas, light liquid, and heavy liquid). Liquids are classified based on their most volatile component present at 20 weight percent or more. If the components have a total vapor pressure equal to or greater than 0.04 psi at 20°C, the material (containing greater than or equal to 20 percent VOCs by weight) is classified as a light liquid; if not, it is classified as a heavy liquid. Classification is based upon actual process conditions, not ambient conditions.
- Comments. If any explanation is required, it should be noted.

An example of a datasheet is given in Table 4-4 (U.S. EPA, 1988, p. 3-23). In some cases, the screening

Table 4.4 Example of a Datasheet (U.S. EPA, 1988, p. 3-23)

Date	Hydrocarbon Detector Type	Source ID	Screening Value (ppmv)	Process Unit	Service	Primary Material	Comments

values may need to be adjusted for the RF, and the datasheet should be designed to accommodate extra columns for the RF and corrected screening values.

4.5 Calibration Procedures for Quality Assurance

Calibration procedures must be used for quality control to ensure high quality data that can be compared to data already gathered by EPA. Each screening instrument must be calibrated before each use, and the readings from these checks recorded. For example, operators should calibrate instruments before usage each morning and each afternoon. Also calibration should be checked periodically (during breaks in the daily testing schedule) to ensure that calibration has not drifted. If the reading is off by more than ±5 percent on the high standard, or ±20 percent on the low standard, the instruments should be recalibrated. If more than one instrument is being used at a process unit, the calibration readings must be calibrated for all instruments.

4.6 References

When an NTIS number is cited in a reference, that document is available from:

National Technical Information Service
5285 Port Royal Road
Springfield, VA 22161
703-487-4650

Analytical Instrument Development, Inc. No date. PID—Different ionization sources and a comprehensive list of ionization potentials. Bulletin AN-145.

U.S. EPA. 1992a. U.S. Environmental Protection Agency. Method 21 evaluation for the HON (90-ME-07). EPA-450/4-92-012. Research Triangle Park, NC. Available from the U.S. EPA Information Center, Research Triangle Park, NC, 919-541-2777.

U.S. EPA. 1992b. U.S. Environmental Protection Agency. Survey of portable analyzers for the measurement of gaseous fugitive emissions. EMTIC BBS, File No. FNL-RPT.W51. Research Triangle Park, NC. April 20. Available from the Office of Research and Development, Center for Environmental Research Information, Cincinnati, OH, 513-569-7562.

U.S. EPA. 1990. U.S. Environmental Protection Agency. Inspection techniques for fugitive VOC emission sources: Student's manual. EPA-340/1-90-026a. Washington, DC. September. Available from the U.S. EPA Information Center, Research Triangle Park, NC, 919-541-2777.

U.S. EPA. 1988. U.S. Environmental Protection Agency. Protocols for generating unit-specific emission estimates for equipment leaks of VOC and VHAP. EPA-450/3-88-010. NTIS PB89-138689. Research Triangle Park, NC. October.

U.S. EPA. 1986. U.S. Environmental Protection Agency. Portable instruments user's manual for monitoring VOC sources. EPA-340/1-86-015. NTIS PB90-218611. Washington, DC. June. pp. 16-19.

U.S. EPA. 1984. U.S. Environmental Protection Agency. Fugitive VOC emissions in the synthetic organic chemicals manufacturing industry. EPA-625/10-84-004. Research Triangle Park, NC. December. p. 7. Available from the Office of Research and Development, Center for Environmental Research Information, Cincinnati, OH, 513-569-7562.

U.S. EPA. 1982. U.S. Environmental Protection Agency. Evaluation of potential VOC screening instruments. EPA-600/7-82-063. NTIS PB83-139733. Research Triangle Park, NC. November.

U.S. EPA. 1981a. U.S. Environmental Protection Agency. Response factors of VOC analyzers at a meter reading of 10,000 ppmv for selected organic compounds. EPA-600/2-81-051. NTIS PB81-234817. Research Triangle Park, NC. September.

U.S. EPA. 1981b. U.S. Environmental Protection Agency. Response of portable VOC analyzers to chemical mixtures. EPA-600/2-81-110. NTIS PB81-234262. Research Triangle Park, NC. June.

U.S. EPA. 1980. U.S. Environmental Protection Agency. Response factors of VOC analyzers calibrated with methane for selected organic compounds. EPA-600/2-81-022. NTIS PB81-182339. Research Triangle Park, NC. September.

Chapter 5
NSPS and NESHAP Equipment Leak Records and Reports

A vital part of determining compliance with NSPS and NESHAP regulations is the evaluation of reports and the examination of onsite records. Records must be maintained to demonstrate compliance with the regulations and to provide information for required reports. A discussion of recordkeeping standards and a description of the content of reports required by NSPS and NESHAP regulations is included in this chapter. Also included in the appendices to this chapter are examples of acceptable report formats.

5.1 Recordkeeping

Review of a facility's records is an important element of determining whether that facility is in compliance with the standards (U.S. EPA, 1990a,b). NSPS and NESHAP fugitive leak regulations require the maintenance of extensive, detailed records on site (see Section 2.2.4). Specific records that are required include:

- A list of identification (ID) numbers for all equipment subject to the requirements.
- A list of equipment ID numbers for equipment designated for "no detectable emissions." The no detectable emissions designation must be signed by the owner or operator and requires an annual compliance test and a record of the date of the compliance test, the background level measured, and the maximum instrument reading measured at the equipment.
- A list of equipment ID numbers for pressure relief devices required to comply with the standards for pressure relief devices in gas/vapor service.
- A list of ID numbers for equipment in vacuum service.

NESHAP fugitive leak regulations also require records:

- A record of the determination of process streams in gas/vapor service or in liquid service.
- A record of the determination of percentage content of benzene in process streams.
- A list of ID numbers for pumps in light liquid service that require weekly visual checks.

If a closed-vent system and a control device are used to control fugitive emissions, the records for this equipment must include:

- Detailed schematics, design specifications, and piping and instrumentation diagrams.
- Dates and descriptions of any changes in the design specifications.
- A description of the parameter(s) monitored to ensure that a control device is operated and maintained in conformance with the design, and an explanation of why that parameter was selected for monitoring.
- Periods when the closed-vent systems and control devices are not operated as designed, including periods when a flare pilot light does not have a flame.
- Dates of startups and shutdowns of the closed-vent systems and control devices.

A dual mechanical seal system that includes a barrier fluid system is an alternative for reducing emissions from pumps and compressors. If a dual mechanical seal system with a barrier fluid system is used, the following information must be recorded: 1) the design criteria that indicates failure of the seal system, the barrier fluid system, or both; 2) an explanation of the choice of this design criteria; and 3) documentation of any changes to the criteria and the reasons for the changes.

The records also must contain a list of ID numbers for valves that are designated as unsafe-to-monitor, an explanation for this designation, and the plan for monitoring each valve. The same records are required for valves designated as difficult-to-monitor. For valves complying with the skip period provisions, a schedule of monitoring and a record of the percent of valves found leaking during each monitoring period must be kept on file.

Certain criteria allow a facility to be exempted from NSPS or NESHAP requirements. If a facility claims an exemption, then it must maintain a log that contains information, data, and analyses to support its exemption declaration.

For each compliance monitoring test conducted, a record of results must be retained. This includes the monthly leak monitoring for pumps and valves, as well as the annual no detectable emissions monitoring for pumps, compressors, valves, and closed-vent systems. Any monitoring for alternative standards also must be documented.

Other nonperiodic circumstances require compliance monitoring. A pressure relief device must be monitored within 5 calendar days after a pressure release to confirm that no emissions are detectable. If a pump or valve is in heavy liquid service, a pressure relief device is in light liquid or heavy liquid service, or a flange or other connector is suspected of leaking, this equipment must be monitored within 5 days. If a leak is detected and repair is attempted, the component must be monitored to determine if the repair attempt was successful. Records must be kept of the findings of all such monitoring tests. If a leak is detected, the equipment must be identified as a leaking component by attaching an ID tag to the leaking equipment. The tag must be weatherproof and readily visible. A tag may be removed after the equipment has been repaired and retested successfully. The tag may be removed from a valve, however, only after it has been repaired and monitored for 2 successive months with no detected leak.

When leaks are detected, records on each leak must be kept and maintained for 2 years. For each detected leak, the equipment ID number, the instrument and operator ID numbers, and the date the leak was detected must be recorded. The date of each repair attempt and an explanation of each method applied should be recorded. If the leak is corrected, then the date of successful repair should be entered in the log. If the repair is unsuccessful, the operator should record that the maximum instrument reading of the monitoring after the respective repair was above 10,000 ppmv. (See Chapter 4 for more information on monitoring.)

If a leak is not repaired within 15 calendar days of being detected, "repair delayed" should be entered in the log, and the reason for the delay should be discussed. If the reason for the delay is that the repair could not be attempted until a process shutdown, then the person who made the decision to delay repair must sign the log. If process unit shutdowns occurred while the leak remained unrepaired, the dates of these shutdowns also must be recorded. Finally, the expected date of successful repair of the leak should be entered for these delinquent leaks. See Table E-4 in Appendix E for a sample form to use to record this information.

5.2 Reporting

5.2.1 NSPS Standards

Reporting requirements for sources subject to NSPSs are found in the general provisions (40 CFR Part 60, Subpart A) and in each individual NSPS (U.S. EPA, 1990a,b). NSPSs for VOC equipment leaks include Subpart VV—Equipment Leaks of VOC in the Synthetic Organic Chemical Manufacturing Industry; Subpart GGG—Equipment Leaks of VOC in Petroleum Refineries; Subpart KKK—Equipment Leaks of VOC from Onshore Natural Gas Processing Plants; and Subpart DDD—Equipment Leak Standards for the Polymer Manufacturing Industry. All these NSPS standards refer directly to Subpart VV for reporting and recordkeeping requirements. The NSPS reporting and recordkeeping requirements discussed in this chapter are those contained in the general provisions and in Subpart VV.

Two types of NSPS reports are required. The NSPS General Provisions (40 CFR Part 60, Subpart A, §60.7) mandate that any owner or operator subject to an NSPS must provide written notification of the date of construction or reconstruction within 30 days after work begins. In addition to the construction or reconstruction notification, the general provisions require the following:

- A notification of the anticipated date of initial startup of an affected facility postmarked between 30 and 60 days before the startup date.
- A notification of the actual date of initial startup of an affected facility within 15 days after startup.
- A notification of any physical or operational change to an existing facility that may increase the emission rate of any pollutant to which a standard applies, unless that change is specifically exempted. This notice shall be postmarked 60 days, or as soon as practicable, before the change.

5.2.1.1 Initial Semiannual Reports

NSPSs require facilities to submit semiannual reports beginning 6 months after the initial startup date, and every 6 months thereafter. The initial semiannual report must include an identification of the process unit, the number of valves in gas/vapor service or light liquid service, the number of pumps in light liquid service, and the number of compressors. Valves, pumps, and compressors that are designated as having no detectable emissions should not be included in the totals listed in the initial semiannual report. An example of an NSPS initial semiannual report is presented in Appendix F.

5.2.1.2 Semiannual Reports

Semiannual reports are required beginning 6 months after the initial semiannual report, and each 6 months thereafter. These reports contain information on the results of LDAR programs. The information required in the semiannual report begins with the process unit identification, which should coincide with the identification in the initial semiannual report. As discussed in Chapter 4, a facility must establish and follow a monitoring program for valves, pumps, and compressors. When a leak is discovered, it must be repaired within 15 calendar days, barring unavoidable circumstances. The semiannual report must document, on a monthly basis, the total number of detected leaks and the number of this total that were not repaired in the required 15-day period. In each instance where a repair is delayed, the report should explain the delay. If the reason for the delay is that it could not be repaired until a process unit shutdown, then the report should indicate why a process unit shutdown was technically infeasible during the reporting period. The report then should show the dates during the reporting period when process unit shutdowns occurred. In addition, any revisions to items reported in the initial semiannual report should be described and discussed.

An example of one acceptable format for an NSPS semiannual report is presented in Appendix G. The format of reports is not specified in the regulations, and a number of variations are acceptable. The NESHAP report examples (presented later in the appendices) illustrate some additional report formats.

5.2.1.3 Other Reporting Requirements

Other reporting requirements contained in the NSPS regulations include two alternative standards for valves: the allowable percentage of valves leaking, and the skip-period LDAR program. The first alternative specifies a 2.0 percent limitation as the maximum percent of valves leaking within a process unit, determined by an initial performance test and a minimum of one performance test annually thereafter. The second alternative standard specifies two skip-period LDAR programs. Under this option, an owner or operator can skip from monthly/quarterly monitoring to less frequent monitoring after completing a specified number of consecutive monitoring intervals with the percentage of valves leaking equal to or less than 2.0 percent. Under the first skip program, after two consecutive quarterly periods with fewer than 2.0 percent of valves leaking, an owner or operator may skip to semiannual monitoring. Under the second program, after five consecutive quarterly periods with fewer than 2.0 percent of valves leaking, annual monitoring may be adopted. This second program is illustrated in Table 5-1. If an owner or operator elects to comply with either of these alternative standards, a notification must be provided 90 days before implementing the provisions.

Table 5-1. Illustration of Skip-Period Monitoring (U.S. EPA, 1983)*

Quarterly Leak Detection Period	Leak Rate of Valves During Period (%)	Quarterly Action Taken (monitor vs. skip)	Good Performance Level Achieved?	
1	3.1	monitor	no	
2	0.8	monitor	yes	1
3	1.4	monitor	yes	2
4	1.3	monitor	yes	3
5	1.9	monitor	yes	4
6	0.6	monitor	yes	5**
7	—	skip	—	1
8	—	skip	—	2
9	—	skip	—	3
10	3.8	monitor	no	4†
11	1.7	monitor	yes	1
12	1.5	monitor	yes	2
13	0.4	monitor	yes	3
14	1.0	monitor	yes	4
15	0.9	monitor	yes	5**
16	—	skip	—	1
17	—	skip	—	2
18	—	skip	—	3
19	0.9	monitor	yes	4‡
20	—	skip	—	1
21	—	skip	—	2
22	—	skip	—	3
23	1.9	monitor	yes	4‡

* Annual inspections following five consecutive quarters of maintaining a good performance level of 2.0 percent.
** Fifth consecutive quarter below 2.0 percent means three quarters of monitoring may be skipped.
† Percentage of leaks above 2.0 percent means quarterly monitoring must be reinstituted.
‡ Percentage of leaks below 2.0 percent means three quarters of monitoring may be skipped.

These strategies would permit a plant that consistently has demonstrated it is meeting the "good performance level" to monitor valves annually, semiannually, or quarterly. Using this approach, a plant could minimize labor and capital costs to achieve the good performance level by developing and implementing its own LDAR procedures or installing valves with lower probabilities

of leaking. Compared to a standard based on an "allowable percentage of valves leaking," where not achieving the good performance level would be a violation of the regulation, the penalty under the "alternative work practice" standard would be only a return to routine quarterly monitoring.

The general provisions of the NSPS regulations require that the owner or operator submit a written report of the results of any performance test to EPA. As discussed in Chapter 2, performance tests are required for no detectable emissions equipment and valves complying with an alternative standard. They also may be required for closed-vent systems, control devices, and equivalent means of emission limitation. Information must be made available to EPA as necessary to determine the operating conditions during the performance tests. In addition, the NSPS (Subpart VV) requires that the owner or operator notify the Administrator of the schedule for the initial performance tests at least 30 days before conducting them. Finally, although NSPSs are federal regulations, enforcement authority may be delegated from EPA to the states. Reports then would be submitted to state agencies instead of to EPA.

5.2.2 NESHAP Standards

Three NESHAPs regulate equipment leaks: Subpart F—National Emission Standard for Vinyl Chloride; Subpart J—Equipment Leaks (Fugitive Sources) of Benzene; and Subpart V—Equipment Leaks (Fugitive Emission Sources). Each of these NESHAPs requires submission of an initial statement, and each subpart requires submission of semiannual reports. If a performance test shows that fewer than 2.0 percent of the valves for a vinyl chloride process unit are leaking, then these results must be submitted, and a new performance test must be conducted annually.

5.2.2.1 Initial Reports

The initial report must contain two portions: a written assertion stating that the company will implement the standards and the testing, recordkeeping, and reporting requirements contained in the applicable NESHAP; and information on the equipment subject to the regulation, including equipment ID numbers, process unit IDs for each source, and a description of the type of equipment (e.g., a pump or a pipeline valve). Also, the percent by weight of VHAPs in the fluid being handled by the equipment and the state of the fluid (i.e., gas/vapor or liquid) must be included. Finally, the initial report must contain a description of the chosen method of compliance and a schedule for subsequent reports.

All facilities in existence on the effective date of NESHAP standards were required to submit an initial report. Therefore, all existing facilities subject to the above-referenced standards already should have submitted an initial report. All new plants are required to submit an initial report with the application for approval of construction required by the general provisions of Part 61 (NESHAPs).

5.2.2.2 Semiannual Reports

Six months after the initial report, and each 6 months thereafter, the facility must submit reports. These semiannual reports are for NESHAP compliance and are similar to the required NSPS semiannual reports. They must contain process unit IDs and the following information on a monthly basis for each process unit:

- The number of valves, compressors, and pumps that were detected leaking.
- Of those valves, compressors, and pumps that were detected leaking, the number that were not repaired within 15 days.
- An explanation of why a repair was delayed. If the reason for the delay was that a process unit shutdown is needed before repair, then an explanation must be given why a process unit shutdown was infeasible.

The report also must include the dates of all process unit shutdowns during the 6-month reporting period and a discussion of any revisions to the initial report.

Examples of NESHAP semiannual reports are contained in Appendices E and H through J. The regulations do not specify the format of the reports; they only specify minimum content requirements. Each facility develops and uses its own format. The following are noteworthy items among these reports:

- Included in Appendix E is an example report for a pump that was not repaired within the 15-day limit with an explanation of the delay. Although the pump was not repaired within the required time period, the report clearly explains the history of the problem pump. This history begins with the initial leak detection and follows it through until a successful repair was reported.
- Contained in Table E-3 of Appendix E is an addition/deletion list that presents another format for required information describing equipment subject to NESHAPs.
- Contained in Appendix I is a report of the monitoring of difficult- and unsafe-to-monitor valves. This report also documents a skip program for monitoring valves.
- Presented in Appendix J are examples of annual no detectable emissions testing of closed-vent systems and valves and updates of equipment ID information.

As is the case for NSPSs, NESHAPs allow 1) the designation of equipment subject to a no detectable emissions limit rather than an LDAR standard, 2) an alternative standard based on the allowable percentage of valves leaking, and 3) an alternative skip-period LDAR program. All three of these require performance tests along with closed-vent systems and control devices. If a performance test was conducted within the 6-month reporting period, then the results of the test also must be included in the semiannual report.

The semiannual NESHAP reports must be submitted twice per year beginning 6 months after the submittal of the initial report. The initial NESHAP report also must contain a schedule verifying the months when these semiannual reports will be submitted. The source then must abide by this schedule unless it is amended in subsequent semiannual reports.

If an owner or operator of a facility wishes to comply with either of the alternative standards for valves (i.e., the allowable percentage of valves leaking or the skip-period LDAR program), he/she must provide notification 90 days before implementation of either of these programs.

Certain circumstances described in the regulations do not require an application for approval of construction/modification. These circumstances are 1) a new source complies with the standards, 2) a new source is not part of the construction of a process unit, or 3) all information required in the initial report is contained in the next semiannual report.

5.3 References

When an NTIS number is cited in a reference, that document is available from:

National Technical Information Service
5285 Port Royal Road
Springfield, VA 22161
703-487-4650

U.S. EPA. 1990a. U.S. Environmental Protection Agency. Inspection techniques for fugitive VOC emission sources: Course module S380. Student's manual. EPA-340/1-90-026a. Washington, DC. September. Available from the U.S. EPA Information Center, Research Triangle Park, NC, 919-541-2777.

U.S. EPA. 1990b. U.S. Environmental Protection Agency. Inspection techniques for fugitive VOC emission sources: Course module S380. Lecturer's manual. EPA-340/1-90-026b. Washington, DC. September. Available from the U.S. EPA Information Center, Research Triangle Park, NC, 919-541-2777.

U.S. EPA. 1983. U.S. Environmental Protection Agency. Control of volatile organic compound equipment leaks from natural gas/gasoline processing plants. EPA-450/3-83-007. NTIS PB84-161520. Research Triangle Park, NC. December.

Chapter 6
Data Management Systems

Complying with the monitoring requirements of the equipment leak standards generates large amounts of data. These data must be carefully and consistently recorded and updated. Presented in this chapter are manual and automated methods for maintaining the data required in an LDAR program. The manual method involves maintaining the data on a collection of datasheets; the automated method tracks the information in a PC-based system.

6.1 Manual Data Management

The manual method of data management entails developing and updating datasheets, performing calculations, and recording all information by hand. The regulations require each regulated facility to keep the following information for all affected equipment at the facility:

- Equipment ID numbers and process-unit descriptions
- Type of equipment (e.g., pumps, valves)
- Type of service (gas/vapor or liquid)
- The primary material being transported in the line
- The method of compliance

In the rest of this section, descriptions of required information and suggested formats for datasheets to record the appropriate information are presented.

6.1.1 Calibration Data

Calibration data for the portable monitoring detector must be kept as referenced in EPA Reference Method 21 (see Appendix C). Even though this information might not be required to be reported under the NSPS and NESHAP standards, it must be maintained as part of any LDAR program. As discussed in Chapter 4, the required Method 21 calibration data include RFs, calibration precision, and response time. Documentation of RF and response time is required only once, prior to placing the detector in service. Normally, RF information is provided by the detector equipment manufacturer or through a published reference (see Section 4.2.2 for a discussion). If the sample pumping system or flow configuration of the detector is altered so that the response time changes, response time must be tested again before further use. If required, such a test could be incorporated easily in the procedure for documenting calibration precision.

According to Method 21, demonstration of calibration precision is required prior to placing a detector in service and at 3-month intervals or next use, whichever is later. A datasheet for documenting calibration precision is presented in Figure 6-1.[1] This datasheet includes space for recording an instrument ID number within the heading. To complete the datasheet, the data are entered in column 1, the operator's initials in column 2, and the reference compound and its known concentration in columns 3 and 4.

To evaluate calibration precision, three readings must be taken. At the beginning of the instrument performance evaluation test, the instrument is assembled and warmed up according to the manufacturer's instructions. Zero gas is introduced into the instrument sample probe, and the instrument meter readout is adjusted to zero. The calibration gas is introduced, the readout is adjusted to correspond to the calibration gas value, zero air is introduced, and the resultant reading is recorded in column 5. Then, calibration gas is introduced and the measured concentration (after 30 seconds) is recorded in column 6. After the readings are recorded, the absolute value of the difference between the known concentration and measured concentration is entered in column 7. Calibration precision is determined by calculating the average algebraic difference between the meter readings and the known value (entered in column 8) and dividing this value by the known calibration value. The result is multiplied by 100 to express the calibration precision as a percentage (entered in column 9) (40 CFR Part 60, Appendix A). An example entry is presented in Figure 6-1; a blank copy of this datasheet is presented in Appendix K.

The instrument calibration procedure must be performed at the beginning of each use of the instrument. As described, the instrument is assembled and warmed up

[1] All figures are presented at the end of this chapter.

according to the manufacturer's instructions. Zero gas is introduced, the instrument readout meter is adjusted to zero, a calibration gas is introduced, and the meter readout is adjusted to correspond to the calibration gas value. Once calibrated, a span check can be taken to verify that no "drift" of calibration has occurred. A span check consists of introducing zero air followed by calibration gas to verify that the instrument readout has not changed or drifted from the set values. Span checks should be taken before shutting off an instrument in operation for long periods of time (i.e., 4 to 6 hours). If an instrument is shut off for any reason, such as to change the battery pack, it should be recalibrated after startup (U.S. EPA, 1986). A datasheet for recording the calibration procedure is presented in Figure 6-2.

6.1.2 Equipment Monitoring Information

The equipment monitoring system requires identifying each piece of equipment. The best way to approach any fugitive emissions monitoring program is to break a large facility into smaller, more manageable units relating to specific processes in the facility—these are called "process units." For example, each storage tank in a facility could be treated as a separate unit when tagging and monitoring affected equipment associated with the individual tanks.

A complete set of forms for maintaining a paper-based equipment monitoring system is presented in Appendix K. An equipment ID form for pumps, shown in Figure 6-3, allows for the definition of smaller units within the facility so that each unit has its own specific series of numbers (i.e., a three-digit prefix is established for each unit operation in a facility). A number is assigned to count each piece of equipment within a unit, and categories of equipment are grouped on individual ID sheets. Thus, a potential equipment numbering system could be based on a three-digit unit prefix and a four-digit equipment specific number, which would generate numbers such as 001 to 0002 (001 would be the unit number, and 0002 would indicate the second piece of equipment in that unit). Equipment ID numbers can be generated in any fashion that an affected facility determines logical; this is merely an example format. ID numbers, however, should be easily traceable for outside observers (e.g., regulatory personnel). ID numbers may be assigned from blueprints, as long as an accurate set of prints, detailing *all* of the affected equipment, is available. Although not specifically required by regulations, permanent attachment of an ID number to each piece of affected equipment is recommended.

The rest of the information required to complete the pump ID form is specified by the regulations and is consistent with the information required to be recorded for the other types of equipment. This information includes a physical description of the pump and its location; the dates when the equipment was put in service and, if applicable, taken out of service; a description of the type of service the pump is in (liquid or gas); the primary material passing through the pump and its concentration; the method of compliance; and the signature of the operator and any comments.

Each piece of equipment also should have its own equipment monitoring form, similar to the one for pumps (see Figure 6-4). The information required to complete the pump monitoring form includes the equipment ID number, the monitoring date, the name of the operator, notes of any visual evidence of a leak, and notes on the condition of the seal pot. When monitoring standard pumps, the only measurement that should be recorded is the maximum concentration emitted from the equipment. For pumps subject to no detectable emissions regulations, three measurements should be recorded: ambient concentration of VOCs, maximum concentration emitted from the equipment, and the actual concentration (the difference between the maximum and ambient readings).

Equipment ID and monitoring forms for compressors are presented in Appendix K. Because pumps and compressors are similar pieces of equipment from a monitoring perspective, these forms are identical to those for pumps.

The equipment ID and monitoring forms for valves will vary depending on whether the valve is unsafe- or difficult-to-monitor. For those valves that are not unsafe- or difficult-to-monitor, the forms are identical to those for pumps (see Appendix K). For valves that are unsafe- or difficult-to-monitor, the equipment ID and monitoring forms are different, reflecting the alternate monitoring schedule required for such valves. Illustrated in Figure 6-5 is a table that can be used to record the information for an unsafe- or difficult-to-monitor valve, which includes the equipment ID number, the alternate schedule for each piece, an explanation of why the valve is unsafe- or difficult-to-monitor, and the operator's signature.

Equipment ID and monitoring forms for flanges and pressure relief devices are presented in Appendix K. Flanges differ from other equipment in that they can comply with the fugitive emissions only by means of Method 21 monitoring and the vacuum service exclusion; the no detectable emissions option has been removed from the forms. Pressure relief devices either must comply with the no detectable emissions standards or be in vacuum service.

In Figure 6-6, an example format for a leak detection report is presented. All of the information that must be recorded when a leak is detected is summarized on the

form, including the equipment ID number; the operator's name; the date the leak was detected; and, most importantly, the date the leak was stopped, the repairs that were made, and documentation for any delays in the repair.

A separate report is kept for each piece of equipment for which a leak is detected. Monitoring is required after each repair is attempted. The resulting instrument reading is recorded in column 3, while a brief description of the repair effort is recorded in column 2. This allows for recording a series of repair efforts on a single report until a successful repair is accomplished. The date of successful repair (once accomplished) is entered on the report form, and this report is completed. If a new leak is detected later on the same piece of equipment, a new leak detection report is begun.

The format used for all of the datasheets presented here is just suggested and may be modified. Combining these datasheets into one LDAR notebook provides a complete list of all equipment affected by the regulations and a single record tracing the compliance of each piece of equipment. The information required by EPA and other regulatory agencies normally would have to be transcribed into a summary format from these source records.

6.2 Automated Data Management

Several PC-based information management systems are commercially available for managing information required by the regulations. These systems are effective and offer many advantages over the manual approach presented above, but they are also relatively expensive. One major advantage of these systems is the capability to gather compliance information in the field on a PC, which then can be downloaded to a desktop PC at another location.

6.3 Reference

When an NTIS number is cited in a reference, that document is available from:

National Technical Information Service
5285 Port Royal Road
Springfield, VA 22161
703-487-4650

U.S. EPA. 1986. U.S. Environmental Protection Agency. Portable instruments user's manual for monitoring VOC sources. EPA-340/1-86-015. NTIS PB90-218611. Washington, DC. June.

Date (1)	Operator (2)	Reference Compound (3)	Calibration Gas Conc. (CALGAS) (4)	Zero Air (5)	Measured Conc. (after 30 sec) (6)	Absolute difference | measured - known | (7)	Average Difference (8)	Calibration Precision[a] (9)
3/27/92	SF	Methane	9,600 ppm	0	9,700	100	133	1.4%
				0	9,500	100		
				0	9,800	200		

[a] calibration precision = $\frac{\text{average difference}}{\text{calibration concentration}} \times 100$

Figure 6-1. Calibration precision for portable VOC detector—ID#___.

Date/ Time	Operator	Reference Compound	Calibration Gas Conc.	Zero Air Adjust	Calibration Gas Adjust	Notes
3/27/92/ 0900	SF	Methane	9,600 ppm	x	x	initial calibration
3/27/92/ 1200	SF	Methane	9,600 ppm	x	x	mid-day span check

Figure 6-2. Instrument calibration for portable VOC detector—ID#___.

Facility Address:_____

Unit Name:_____ Unit Number:_____

Equipment ID#	Description	In-Service Date	Out-of-Service Date	Primary Material	Concentration	Type of Service[a]	Compliance Method[b]	Operator/ Comments

[a] LL = Light Liquid, HL = Heavy Liquid, GS = Gaseous Service
[b] M21 = Method 21, NDE = No Detectable Emissions, DMS = Dual Mechanical Seal, VS = Vacuum Service

Figure 6-3. Pump identification form.

Unit Name:_____ Unit Number:_____

Equipment ID Number:_____ No Detectable Emissions - Yes:___ No:___

Date	Operator	Visual Check	Seal Pot Condition	Ambient Reading	Maximum Reading	Maximum - Ambient (Actual)	Comments

Figure 6-4. Equipment monitoring form.

Facility:_____

Unit Name:_____ **Date:**_____

Equipment ID#	Explanation	Alternate Schedule	Operator Signature

Figure 6-5. Unsafe- and difficult-to-monitor valves.

Facility:_____
Address:_____
Unit Name:_____ Unit #:____
Equipment ID#:_____ Instrument ID#:_____
Operator:_____ Date Leak Discovered:_____
Date Leak Confirmed:_____ Repair Delayed - Yes[a]:___ No:___
Successful Repair Date:_____

Date of Attempted Repairs	Repairs Attempted	Date Retested	Instrument Reading

[a]Reason for Delay:_____
_____
_____
_____

Date of Next Process Shutdown:_____

Operator Signature:_____

Figure 6-6. Leak detection report.

Chapter 7
Engineering Considerations

7.1 Developing Emission Estimates

Emission estimates are developed to meet requirements for permitting and inventories and for various regulations, e.g., the Superfund Amendments and Reauthorization Act of 1986 (SARA). In determining compliance with standards of performance or evaluating the effectiveness of individual programs of emissions reduction, estimating emissions from a given source is a key element. While testing for process emission sources is a relatively straightforward procedure, estimating emissions from widely dispersed fugitive emission sources can be somewhat more difficult (U.S. EPA, 1986a).

Described in this chapter[1] are five methodologies appropriate to use to develop unit-specific emission estimates for equipment leaks of VOCs and VHAPs. These methods are the average emission factor method; the leak/no-leak emission factor method; the three-strata emission factor method; the application of EPA correlations; and the development of new, site-specific correlations (U.S. EPA, 1988).

All five methods require some data collection, data analysis, and/or statistical evaluation. The five methodologies and the options available for collecting and analyzing the data are shown in Figure 7-1. As shown in the flowchart, the methods vary in rigorousness and complexity. The average factor method is the least complex and demanding, and developing site-specific correlations is the most complex and demanding. The end product of each methodology is an emissions inventory for equipment leaks organized by type of equipment and by service (i.e., light liquid, gas, or heavy liquid).

7.1.1 Use of EPA's Average Emission Factors

All methods require an accurate count of equipment components by type of equipment and by service. The most basic approach is to apply EPA-developed average emission factors to the equipment counts for the unit. EPA's average emission factors are shown in Table 7-1. The product of the emission factor and the number of equipment components yields the emission rate per source type, and the sum of the emission rates for all source types provides the unit-specific emission estimates.

Table 7-1. Average Emission Factors for Fugitive Emissions

Equipment	Service	Emission Factor (kg/hr/source)*
Valves	Gas	0.0056
	Light liquid	0.0071
	Heavy liquid	0.00023
Pump seals	Light liquid	0.0494
	Heavy liquid	0.0214
Compressor seals	Gas/vapor	0.228
Pressure relief seals	Gas/vapor	0.104
Flanges	All	0.00083
Open-ended lines	All	0.0017
Sampling connections	All	0.0150

* To convert to lb/hr, multiply value by 2.205.

To develop emission factors for individual equipment leak emission sources, EPA used assessment studies of equipment in petroleum refineries and SOCMI (U.S. EPA, 1980a,b). In these studies "screening" data were gathered using portable OVAs, and mass emissions were measured by enclosing individual pieces of equipment in bags and measuring the organic material collected in the bags. These data permitted the development of leak rate/screening value correlations and emission factors for sources in petroleum refineries and SOCMI (U.S. EPA, 1980, 1981a). Leak rate/screening value correlations and emission factors were generated in these studies for valves in gas/vapor service in SOCMI. Leak rate/screening value correlations also were generated for light liquid valves and light liquid pumps in SOCMI; industry average emission factors were not developed.

[1] Text in this chapter is based on U.S. EPA, 1988, except as noted.

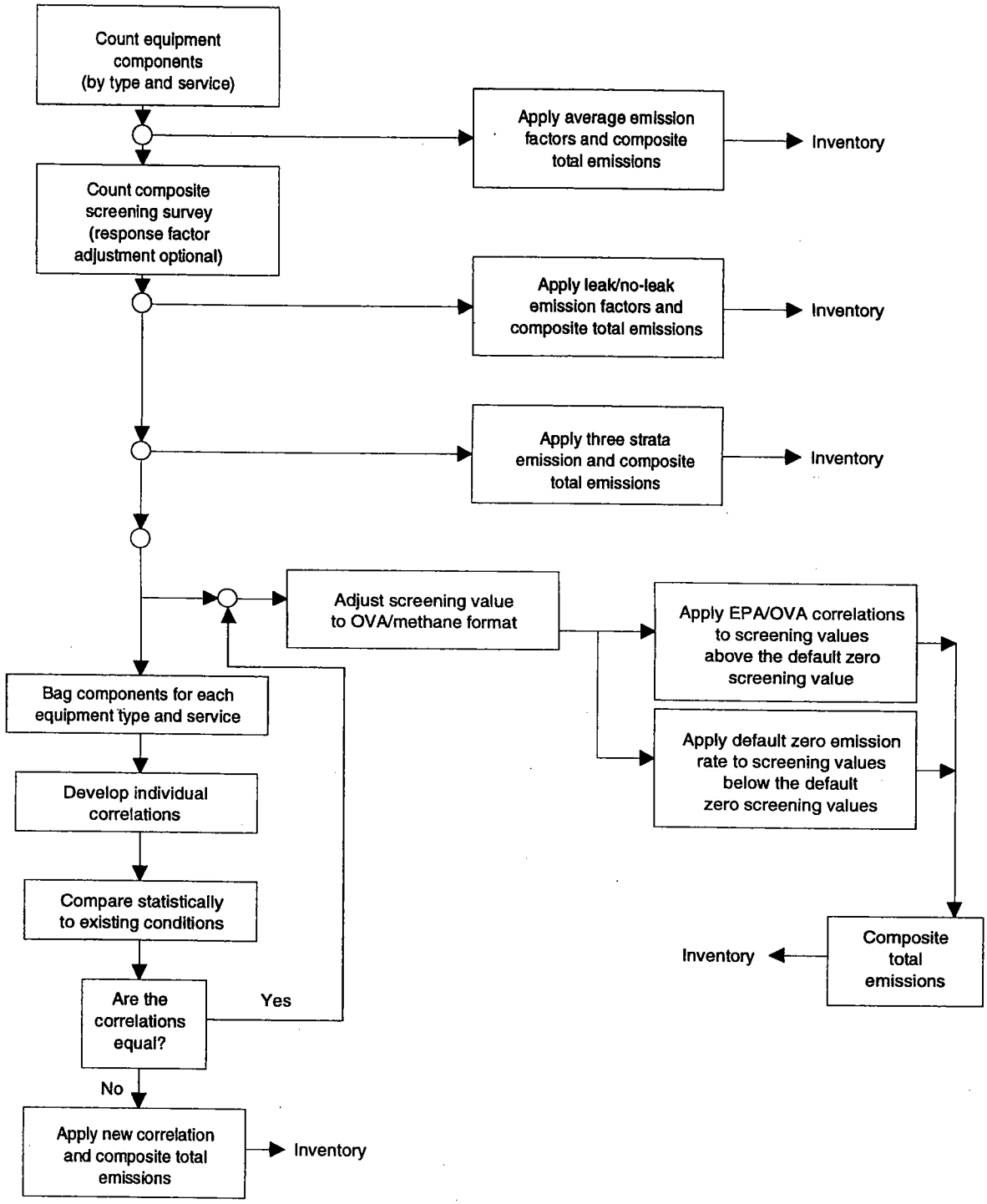

Figure 7-1. Strategy for estimating emissions from equipment leaks.

7.1.2 The Leak/No-Leak Approach

The leak/no-leak method is a refinement of the average emission factor method, which allows adjustment to individual unit conditions and operation. This method and all the remaining methods discussed in this chapter require screening of all equipment to be included in the inventory; screening should be conducted using a portable OVA. Equipment that is dangerous to screen can be omitted from the set of equipment components to be screened; emission rates of dangerous-to-screen equipment can be estimated instead using EPA's leaking and nonleaking emission factors, as shown in Table 7-2.

Table 7-2. Leaking and Nonleaking Emission Factors for Fugitive Emissions (kg/hr/source)

Equipment	Service	Leaking (≥10,000 ppmv) Emission Factor	Nonleaking (<10,000 ppmv) Emission Factor
Valves	Gas*	0.0451	0.00048
	Light liquid	0.0852	0.00171
	Heavy liquid	0.00023**	0.00023
Pump seals	Light liquid	0.437	0.0120
	Heavy liquid	0.3885	0.0135
Compressor seals†	Gas	1.608	0.0894
Pressure relief valves	Gas	1.691	0.0447
Flanges	All	0.0375	0.00006
Open-ended lines	All	0.01195	0.00150

* The leaking and nonleaking emission factors for valves in gas/vapor service are based upon the emission factors determined for gas valves in ethylene, cumene, and vinyl acetate units during the SOCMI Maintenance Study.
** The leaking emission factor is assumed equal to the nonleaking emission factor since the computed leaking emission factor (0.00005 kg/hr/source) was less than the nonleaking emission factor.
† The emission factor reflects the existing control level of 60 percent found in the industry; control is achieved through the use of barrier fluid/degassing reservoir/vent-to-flare or other seal leakage capture system.

Insulated equipment can be considered difficult-to-monitor equipment, and the decision to remove insulation to facilitate screening is left to individual judgment. If insulation is not removed, the insulated component is assumed to leak at the same rate as would a similar uninsulated component.

For flanges, a reduced number of components can be screened by screening a sample number of flanges until a 95 percent confidence interval is achieved (U.S. EPA, 1988, pp. E-1 and E-2). In compiling screening values for use in this technique (or any of those that follow), an RF can be applied to adjust the screening values measured for the chemical in the line to a known standard for the instrument.

The leak/no-leak method is based on the assumption of only two emission rates and two populations of equipment components: sources that leak (with screening concentrations greater than or equal to 10,000 ppmv) and sources that do not leak (with screening concentrations less than 10,000 ppmv). This approach assumes that when a group of sources leaks, on average, it leaks at a certain emission rate. Similarly, as a group, nonleaking sources average a certain mass emission rate. Thus, the overall emission estimate for a population of emission sources consists of two components—leaking source emissions and nonleaking source emissions.

Presented in Table 7-2 are leaking and nonleaking emission factors determined by EPA for equipment leaks. These leaking and nonleaking emission factors were generated using 1) emission factors calculated from empirical screening distribution data and leak rate/screening value correlations, 2) the leak frequencies associated with the emission factors, and 3) the percent of mass emissions associated with the leaking sources. The detailed procedure for generating leaking and nonleaking emission factors is published in *Fugitive Emission Sources of Organic Compounds* (U.S. EPA, 1982) and also is described in *Emission Factors for Equipment Leaks of VOC and HAP* (U.S. EPA, 1986a, pp. 3-12 through 3-21).

An application of the leak/no-leak method for estimating emissions is shown in the following example for a hypothetical chemical process unit. Presented in Table 7-3 are the data necessary for applying this method to the hypothetical unit. The second column contains the number of sources in the process unit, by source type. The third column contains the number of sources with screening values greater than or equal to 10,000 ppmv (i.e., leaking sources). The percentage of sources leaking is shown in the fourth column. The emissions estimates for this hypothetical process unit then can be computed using the applicable leaking and nonleaking emission factors shown in Table 7-2 and the equation beneath Table 7-3. For example, 3 of the 47 pump seals in light liquid service were found to be leaking. Using the leak/no-leak method, the following emission estimate is generated for pumps in light liquid service:

$$[0.437 \text{ kg/hr/source } (6.4\%) + 0.012\ (93.6\%)]0.01 = 0.0392 \text{ kg/hr/source}$$

The emission estimate per source for pumps in light liquid service can be computed by dividing the unit-specific emission estimate by the equipment count. The

Table 7-3. Estimate of "Uncontrolled" Fugitive Emissions for a Hypothetical Case

Source	Number Screened	Number Leaking	Percent Leaking	Computed Emission Estimate* (kg/hr/source)	Annual** Emissions (Mg/yr)
Pump seals					
Light liquid	47	3	6.4	0.0392	16.1
Heavy liquid	3	1	33.3	0.1385	3.6
Valves					
Gas/vapor	625	19	3.0	0.0018	10.1
Light liquid	1,180	13	1.1	0.0026	27.2
Heavy liquid	64	0	0	0.00023	0.1
Pressure relief valves					
Gas/vapor	31	1	3.2	0.0978	26.6
Open-ended lines	278	9	3.2	0.0018	4.5
Compressor seals	4	0	0	0.0894	3.1
Sampling connections	70	—	—	0.0150	9.2
Flanges	2,880	20	0.7	0.00032	8.1

* Based on values from Table 7-2, using EE = [LEF x PCL + NLEF x (100-PCL)]/100 where:
EE = emission estimate (per source)
LEF = leaking emission factor
NLEF = nonleaking emission factor
PCL = percent of sources found leaking
** This hypothetical process unit is assumed to be in continuous operation, so it operates for 8,760 hours per year. Batch or campaign processes may operate for fewer hours per year, so the annual emissions would be prorated to account for the hours the equipment contained the chemical.

last column in Table 7-3 contains the annual emissions estimates, by source type, for the hypothetical unit.

While this example illustrates how total VOC emissions per source type are calculated, a similar procedure can be used to estimate emissions for a particular species in the line. For example, consider this same hypothetical case where the light liquid in a process contains 20 weight percent of Compound A. The emission estimate for Compound A for light liquid pumps is computed by applying the weight percent (in this case, 20 percent) to the emission estimate generated: (0.20)(0.039 kg/hr) = 0.0078 kg/hr. Another example can be illustrated in the hypothetical case if the light liquid contains only 80 weight percent VOC and Compound A accounts for 20 percent by weight of the VOC. The emission estimate for Compound A for light liquid pumps would be computed as: (0.2)(0.8)(0.039 kg/hr) = 0.00624 kg/hr.

7.1.3 *Application of Stratified Emission Factors*

Another method of generating emission estimates is a refinement of the leak/no-leak approach that uses stratified emission factors. The leak/no-leak method is based on two emission rates and two populations (i.e., leaking and nonleaking sources). The stratified emission factor method divides the nonleaking sources into two discrete screening value ranges.

Screening values in the EPA SOCMI data base are distributed widely from 0 ppmv to more than 100,000 ppmv, and the mass emissions are distributed correspondingly. The stratified emission factor method segments this distribution into discrete intervals to account for different ranges of screening values. The following ranges are used:

- 0-1,000 ppmv
- 1,001-10,000 ppmv
- Over 10,000 ppmv

Emission factors for each screening value range have been generated from data gathered during previous EPA studies. These stratified emission factors represent the leak rates measured during fugitive emissions testing. Their development incorporated the statistical methods used by EPA in developing other emission factors. The emission factor for each discrete interval, by equipment type and service, is presented in Table 7-4.

This method requires all equipment screening (except for dangerous-to-screen equipment) to be conducted in accordance with EPA reference methods. All screening values must be recorded according to the applicable ranges. Then, as with the leak/no-leak method, the product of the appropriate emission factor and the number of components in each screening value range

Table 7-4. Stratified Emission Factors for Equipment Leaks

Source	Service	Emission Factors (kg/hr/source) for Screening Value Ranges (ppmv)		
		0-1,000	1,001-10,000	Over 10,000
Valves	Gas/vapor	0.00014	0.00165	0.0451
	Light liquid	0.00028	0.00963	0.0852
	Heavy liquid	0.00023	0.00023	0.00023
Pump seals	Light liquid	0.00198	0.0335	0.437
	Heavy liquid	0.00380	0.0926	0.3885
Compressor seals	Gas/vapor	0.01132	0.264	1.608
Pressure relief devices	Gas/vapor	0.0114	0.279	1.691
Flanges, connections	All	0.00002	0.00875	0.0375
Open-ended lines	All	0.00013	0.00876	0.01195

yields the emission rate for that value range and source type. The total emission rate is the sum of all the emission rates for each value range and source type. Illustrated in Table 7-5 is the manner in which the stratified emission factor approach should be implemented.

7.1.4 Leak Rate/Screening Value Correlations

Mathematical correlations offer a continuous function over the entire range of screening values instead of discrete intervals. EPA has published correlations relating screening values to mass emissions rates (U.S. EPA, 1980b, 1981a). As shown in Table 7-6, correlations have been developed to apply to four equipment types and services. EPA's correlations are based upon OVA measurements taken using Method 21 with an instrument calibrated to methane (see Appendix C for information on Method 21). Screening value measurements used with these published correlations should use a similar format. For example, if a threshold limit value (TLV) instrument calibrated to hexane is used to gather screening data, the data must be transformed to represent measurements gathered using an OVA, calibrated to methane, before using the published correlations. If a detector fails to meet Method 21 specifications or published transformations are not available, an instrument response curve must be developed to relate screening values to actual concentrations in the appropriate format (OVA/methane). This screening value correction curve should be developed in the laboratory before the detector is used in the field.

Another correction factor that can be applied to Method 21 and non-Method 21 instruments is the RF. For many compounds, the instrument response is nonlinear with

Table 7-5. Estimate of Fugitive Emissions Using Stratified Emission Factors for a Hypothetical Case

Source	Number Screened	Number of Sources Screened (ppmv)			Computed Emission Estimate	
		0-1,000	1,001-10,000	Over 10,000	Per Source Type* (kg/hr)	Per Source** (kg/hr/source)
Valves						
Light liquid	1,180	1,020	147	13	2.81	0.00238
Heavy liquid	64	63	1	0	0.01472	0.00023
Pump seals						
Light liquid	47	32	12	3	1.776	0.0378
Heavy liquid	3	1	1	1	0.485	0.1616
Compressor seals						
Gas/vapor	4	3	1	0	0.298	0.0745
Pressure relief devices						
Gas/vapor	31	25	5	1	3.37	0.1087
Flanges	2,880	2,600	160	20	2.20	0.00076
Open-ended lines	278	236	33	9	0.427	0.00154

* Based on emission factors from Table 7-4: $EE = (NL_1 \times SEF_1) + (NL_2 \times SEF_2) + \ldots$ where:
EE = emission estimate
NL_1, NL_1, etc. = number leaking in first range (0-1,000), number leaking in second range (1,001-10,000), etc.
SEF_2, SEF_2, etc. = stratified emission factor for first range, stratified emission factor for second range, etc.
** Computed emission estimate per source = computed emission estimate per source type/number screened.

Table 7-6. Prediction Equations for Nonmethane Leak Rate for Valves, Flanges, and Pump Seals in SOCMI Process

Source Type	Instrument	Least-Squares Equation†	Number of Data Pairs	Correlation Coefficient (r)	Standard Deviation of Estimate
Valves*					
Gas service	OVA	$NMLK = 1.68\ (10^{-5})\ (MXOVA)^{0.693}$	99	0.66	0.716
Light liquid service	OVA	$NMLK = 3.74\ (10^{-4})\ (MXOVA)^{0.47}$	129	0.47	0.902
Flanges**	OVA	$NMLK = 3.731\ (10^{-5})\ (MXOVA)^{0.82}$	52	0.77	0.520
Pump Seals*	OVA	$NMLK = 1.335\ (10^{-5})\ (MXOVA)^{0.898}$	52	0.81	0.650

NMLK = nonmethane leak rate (lb/hr)
MXOVA = maximum screening value (ppmv)—OVA instrument
* Source: U.S. EPA, 1981b.
** Source: U.S. EPA, 1980d.
† NMLK is given in lb/hr; the units might have to be changed for reporting purposes.

increasing screening value. In terms of the basic leak/no-leak method, a single-point RF adjustment at the leak definition of 10,000 ppmv is adequate. To use the correlations, however, the best estimate of screening concentration over the entire range is required, and a correction for nonlinear response must be made. This can be accomplished in the laboratory by generating a response curve. A number of EPA publications address correction factor issues in greater detail (U.S. EPA, 1981c,d; 1986b).

Depicted in the flowchart in Figure 7-1 is a separate treatment of "zero" screening values. The function describing the correlation of leak rate and screening value becomes discontinuous for zero and near-zero values, and the correlation function mathematically predicts zero emissions for zero readings on the portable instrument. EPA's data show this prediction to be incorrect, however. Mass emissions have been measured from equipment showing no screening concentration above zero. These higher measured emissions are related to detector accuracy. For example, a case where mass emissions corresponded to a screening value of ≤200 ppmv could not be quantified because the accuracy limit of the detector was 200 ppmv. To handle this discontinuity at the low end of the correlation, EPA derived a "default zero" screening value (8 ppmv) and an associated mass emission rate for the screening values between zero and the default zero reading. The default zero values and emission rates shown in Table 7-7 were derived from mass emissions data gathered in chemical plants and the published leak rate/screening value correlations.

These emission factors should be applied to equipment components screening between 0 and 200 ppmv, but published correlations should be applied to all screening concentrations above 200 ppmv. The total emissions estimate for equipment leaks is generated by totaling emissions estimates for all "default zeroes" and adding that total to the total estimates generated using the correlations. An alternative methodology for generating unit-specific default zero emission rates is presented in U.S. EPA (1988) and CMA (1989).

Table 7-7. Default Zero Values and Emission Rates

Equipment, Type/Service	Default Zero Screening Value (ppmv)	Zero Screening Value Emission Rate (kg/hr/source)
Valves, gas	8	0.000033
Valves, light liquid	8	0.000451
Flanges	8	0.000093
Pumps and all other components	8	0.000039

7.1.5 Unit-Specific Correlations

A facility may develop its own correlations for its process units if leak rates are statistically different from EPA's rates. The following steps should be taken to generate an emission estimate using unit-specific correlations:

1. Gather mass emission data and calculate mass emission rate (leak rate).
2. Develop leak rate/screening value correlation.
3. Develop statistical considerations of leak rate/screening value correlations.
4. Apply leak rate/screening value correlations to the empirical screening data.
5. Predict emissions.

The following paragraphs present the details of each step.

After the process unit is screened for all source types, selected components in each source type can be bagged to measure the mass emission rate. The components selected for mass emission measurement should be rescreened at the time of bagging. The mass emission rate determined by bagging and the rescreening value then are used to validate the application of EPA's correlations to the process unit.

EPA leak rate/screening value correlations are based on data gathered using an OVA instrument calibrated with methane. If other instruments or calibration gases are used, then the screening value must be adjusted (using theoretical or empirical correction factors) to be equivalent to values measured using an OVA calibrated with methane prior to any comparisons to EPA equations. Components yielding instrument readings above the saturation point of the detector must be bagged to quantify the emission rate.

The amount of bagging should depend on the objective of the data collection. To check the fit of EPA-published equations to a particular process unit, as few as four leak-rate measurements of a particular source type in a particular service could be adequate. If new equations are required, at least 30 leak-rate measurements should be obtained. The statistical goal is to generate estimates that are within 50 percent of the mean value with 95 percent confidence. Because of the inherent variability of leak rate/screening data, detecting differences between correlations with fewer than 30 data pairs is difficult. Fewer data pairs are acceptable, however, if the statistical goal still can be achieved.

Consider a hypothetical process unit with a large population of sources with screening values well distributed over the range of 0 to 100,000+ ppmv. To develop statistically valid leak-rate/screening value correlations, mass emissions data must be collected from individual sources that have screening values distributed over the entire range. For each source type (e.g., valves, pumps) and service (e.g., gas, light liquid), a random sample of six sources should be chosen for bagging from each of the following screening value ranges:

- 1-100 ppmv
- 101-1,000 ppmv
- 1,001-10,000 ppmv
- 10,001-100,000 ppmv
- >100,000 ppmv

If the maximum response of the screening instrument is 100,000 ppmv then 20 (or all, whichever is less) of the sources screened at 100,000 ppmv should be bagged. If six sources are not available in a particular screening value range, additional sources from the nearest range should be tested. If screening values greater than 10,000 ppmv are not found in the process, the following five groups can be used:

- 1-100 ppmv
- 101-300 ppmv
- 301-1,000 ppmv
- 1,001-3,000 ppmv
- 3,001-10,000 ppmv

Similar groupings can be developed if all sources in the unit screen less than 1,000 ppmv.

If a statistical determination is made that emission estimates are within 50 percent of the mean value and 95 percent confidence can be achieved with fewer than 30 data pairs, the bagging strategies shown in Table 7-8 are recommended.

Table 7-8. Bagging Strategies

Screening Value Range (ppmv)	Total Number of Leak-Rate Measurements			
	4	8	12	20
1-100	2	2	3	4
101-1,000		1	2	4
1,001-10,000		1	2	4
10,001-100,000	2	2	3	4
>100,000		2	2	4

These groupings and recommended number of sources are guidelines based on field experience in measuring leak rates and developing leak-rate/screening value equations. Other source selection strategies can be used if an appropriate rationale is given.

With appropriate mass emission data and screening values, leak-rate/screening value correlations can be generated. Least-squares regression analyses should be performed for each source type/service, regressing the logarithm of the nonmethane leak rate on the logarithm of the screening concentration, according to the following equation:

$$\text{Log (leak rate)} = B_0 + B_1 \text{ Log (screening concentration)}$$

where:

B_0, B_1 = model parameters

Confidence intervals should be calculated for the estimated equation, and a scale-bias correction factor is required to transform the equation in the log scale back to the original units. Bagged sources whose screening values are known to be above 100,000 ppmv, but whose

actual screening values are unknown, should not be used to fit the described regression line.

These least-squares regression analyses result in predictive equations that must be statistically evaluated. A statistician should be consulted if the person performing the analysis is not familiar with this type of analysis. A detailed discussion of leak-rate/screening value correlations, and their associated emissions estimates, is presented in U.S. EPA (1988).

7.2 References

When an NTIS number is cited in a reference, that document is available from:

National Technical Information Service
5285 Port Royal Road
Springfield, VA 22161
703-487-4650

CMA. 1989. Chemical Manufacturers Association. Improving air quality: Guidance for estimating fugitive emissions from equipment. Washington, DC. January.

U.S. EPA. 1988. U.S. Environmental Protection Agency. Protocols for generating unit-specific emission estimates for equipment leaks of VOC and VHAP. EPA-450/3-88-010. NTIS PB89-138689. Research Triangle Park, NC. October.

U.S. EPA. 1986a. U.S. Environmental Protection Agency. Emission factors for equipment leaks of VOC and HAP. EPA-450/3-86-002. NTIS PB86-171527. January. p. 3-1.

U.S. EPA. 1986b. U.S. Environmental Protection Agency. Portable instrument user's manual for monitoring VOC sources. EPA-340/1-86-015. NTIS PB90-218611. Washington, DC. June.

U.S. EPA. 1982. U.S. Environmental Protection Agency. Fugitive emission sources of organic compounds—Additional information on emissions, emission reductions, and costs. EPA-450/3-82-010. NTIS PB82-217126. Research Triangle Park, NC. April.

U.S. EPA. 1981a. U.S. Environmental Protection Agency. Evaluation of maintenance for fugitive VOC emissions control. EPA-600/2-81-080. NTIS PB81-206005. Research Triangle Park, NC. May.

U.S. EPA. 1981b. U.S. Environmental Protection Agency. Evaluation of maintenance for fugitive VOC emissions control. EPA-600/2-81-080. NTIS PB81-206005. pp. 54-56.

U.S. EPA. 1981c. U.S. Environmental Protection Agency. Response factors of VOC analyzers at a meter reading of 10,000 ppmv for selected organic compounds. EPA-600/2-81-051. NTIS PB81-234817. Research Triangle Park, NC. September.

U.S. EPA. 1981d. U.S. Environmental Protection Agency. Response of portable VOC analyzers to chemical mixtures. EPA-600/2-81-110. NTIS PB81-234262. Research Triangle Park, NC. September.

U.S. EPA. 1980a. U.S. Environmental Protection Agency. Assessment of atmospheric emissions from petroleum refining: Volume 4, Appendix C, D, E. EPA-600/2-80-075d. NTIS PB81-103830. Research Triangle Park, NC. July.

U.S. EPA. 1980b. U.S. Environmental Protection Agency. Assessment of atmospheric emissions from petroleum refining: Volume 3, Appendix B. EPA-600/2-80-075c. NTIS PB80-225279. Research Triangle Park, NC. April.

U.S. EPA. 1980c. U.S. Environmental Protection Agency. Problem-oriented report: Frequency of leak occurrence for fittings in synthetic organic chemical plant process units. EPA-600/2-81-003. NTIS PB81-141566. Research Triangle Park, NC. September.

U.S. EPA. 1980d. U.S. Environmental Protection Agency. Assessment of atmospheric emissions from petroleum refining: Volume 3, Appendix B. EPA-600/2-80-075c. NTIS PB80-225279. Research Triangle Park, NC.

Appendix A
Chemical Processes Affected by the Proposed HON Regulation

Table A-1. Chemical Processes Affected by the Proposed HON Regulation

AFFECTED CHEMICAL PROCESSES			
GROUP 1			
Chemical Name	CAS No.	Chemical Name	CAS No.
1-Chloro-3-nitrobenzene	121733	Bis(Chloromethyl) ether	542881
Acetone	67641	Bromobenzene	10861
Acetonitrile	75058	Butanediol (1,4-isomer)	110634
Acetophenone	98862	Butyrolacetone	96480
Acrylamide	79061	Carbon tetrachloride	56235
Acrylonitrile	107131	Chloroacetophone (2-isomer)	532274
Adiponitrile	111693	Chloroaniline (o-isomer)	95512
Allyl alcohol	10718	Chlorobenzene	108907
Aminophenol (p-isomer)	123308	Chlorodifluoro-methane	25497294
Aniline	62533	Chloroform	67663
Azobenzene	103333	Chloronitroben-zene (o-isomer)	88733
Benzene	91432	Chloronitroben-zene (p-isomer)	100005
Benzenedisulfonic acid	98486	Cumene hydroperoxide	80159
Benzenesulfonic acid	96113	Cumene (isopropyl benzene)	98828
Benzidine	92875	Cyclohexane	110827
Benzophenone	119619	Cyclohexanol	108930
Biphenyl	92524	Cyclohexanone	108941

AFFECTED CHEMICAL PROCESSES (Continued)			
Chemical Name	CAS No.	Chemical Name	CAS No.
Cyclohexene	110838	Diethylene glycol monoethyl ether	111900
Dichloroaniline	95761	Dimethyl sulfate	77781
Dichlorobenzene (1,4-isomer) (PDB)	106467	Dimethylaminoethanol (2-isomer)	108010
Dichlorobenzene (m-isomer)	541731	Dinitrobenzenes	25154545
Dichlorobenzene (o-isomer)	95501	Dioxane	123911
Dichlorobenzidine (3,3-isomer)	1331471	Dioxilane	646060
Dichloroethane (1,2-isomer) (EDC)	107062	Diphenyl methane	101815
Dichloroethyl ether	111444	Diphenyl oxide (POM)	101848
Dichlorodifluoromethane	75718	Dipropylene glycol	25265718
Diethanolamine	111422	Dodecylbenzene (n-isomer)	121013
Diethylene glycol	111466	Epichlorohydrin	106898
Diethylene glycol dibutyl ether	112732	Ethanolamines	141435
Diethylene glycol diethyl ether	112367	Ethyl benzene	100414
Diethylene glycol dimethyl ether	111966	Ethylene carbonate	96491
Diethylene glycol monobutyl ether acetate	124174	Ethylene dibromide (EDB)	106934
Diethylene glycol monomethyl ether	111773	Ethylene glycol	107211
Diethylene glycol monobutyl ether	112345	Ethylene glycol diacetate	111557
Diethylene glycol monoethyl ether acetate	112152	Ethylene glycol diethyl ether	6299141

AFFECTED CHEMICAL PROCESSES (Continued)			
Chemical Name	CAS No.	Chemical Name	CAS No.
Ethylene glycol dimethyl ether	110714	Maleic anhydride	108316
Ethylene glycol monobutyl ether acetate	112072	Maleic hydrazide	123331
Ethylene glycol monobutyl ether	111762	Malic acid	6915157
Ethylene glycol monoethyl ether acetate	11159	Metanilic acid	121471
Ethylene glycol monoethyl ether	110805	Methionine	63683
Ethylene glycol monomethyl ether acetate	110496	Methylene chloride	75092
Ethylene glycol monomethyl ether	109864	Methylene dianiline (MDA)	101779
Ethylene glycol monophenyl ether	122996	Methylstyrene (a-isomer)	98839
Ethylene glycol monopropyl ether	2807309	Morpholine	110918
Ethylene oxide	75218	Nitroaniline (o-isomer)	88744
Formaldehyde	50000	Nitroaniline (p-isomer)	100016
Fumaric acid	110178	Nitrobenzene	98953
Hexamethylene-tetramine	100970	Octene-1	111660
Hydroquinone	123319	Paraformaldehyde	9002817
Isopropylamine	75310	Pentaerythritol	115775
Linear alkylbenzene	123013	Perchlorethylene	127184
Maleic acid	110167	Phenylenediamine (o-isomer)	95545
		Phenylenediamine (p-isomer)	106503

AFFECTED CHEMICAL PROCESSES (Continued)			
Chemical Name	CAS No.	Chemical Name	CAS No.
Piperazine	110850	Trichlorofluoro-ethane	76131
Propiolactone (b-isomer)	57578	Trichlorophenol (2,4,5-isomer)	95954
Propionic acid	79094	Triethanolamine	102716
Propylene glycol	57556	Triethylene glycol	112276
Propylene glycol monomethyl ether	107982	Triethylene glycol dimethyl ether	112492
Propylene oxide	75569	Triethylene glycol monomethyl ether	112356
Resorcinol	108463	Trimethylpropane	77996
Styrene	100425	Vinyl chloride	75014
Succinic acid	110156	Xylenes	1330207
Succinonitrile	110612	Xylenes (o-isomer)	95476
Tartaric acid	526830	Xylenes (p-isomer)	106423
Tetrachlorobenzene (1,2,3,5-isomer)	634902		
Tetrachlorobenzene (1,2,4,5-isomer)	95943		
Tetraethylene glycol	112607		
Tetrahydrofuran	109999		
Toluene	108883		
Trichlorobenzene (1,2,4-isomer)	102821		
Trichloroethylene	79016		
Trichlorofluoromethane	75694		

AFFECTED CHEMICAL PROCESSES (Continued)			
GROUP 2			
Chemical Name	CAS No.	Chemical Name	CAS No.
Acetaldehyde	75070	Carbon tetrabromide	558134
Acetaldol	107891	Carbon tetrafluoride	75730
Acetamide	60355	Chloral	75876
Acetanilide	103844	Chloroacetic acid	79118
Acetic acid	64197	Chloroaniline (m-isomer)	108429
Acetic anhydride	108247	Chloroaniline (p-isomer)	106478
Acetyl chloride	75365	Chlorophenol (m-isomer)	106430
Aminoethylethanolamine	111411	Chlorophenol (p-isomer)	106489
Anisidine (o-isomer)	90040	Chloroprene	126998
Butadiene (1,3-isomer)	106990	Chlorotrifluoro-methane	75729
Butyl acetate (N-isomer)	123864	Crotonaldehyde	4170300
Butyl alcohol (N-isomer)	71363	Crotonic acid	3724650
Butylamine (n-isomer)	109739	Cyanoacetic acid	372096
Butylene glycol (1,3-isomer)	107880	Cyclooctadiene	111784
Butyraldehyde (N-isomer)	123728	Cyclooctadiene (1,5-isomer)	1552121
Butyric acid	107926	Dichloro-1-butene (3,4-isomer)	760236
Butyric anhydride	106310	Dichloroethylene (1,4-isomer)	540590
Caprolactam	105602	Dichloropropene (1,3-isomer)	542756

AFFECTED CHEMICAL PROCESSES (Continued)			
Chemical Name	CAS No.	Chemical Name	CAS No.
Diethyl sulfate	64675	Hexachlorobenzene	118741
Dimethyl benzidine (3,3-isomer)	119937	Hexachlorobutadiene	87683
Dimethyl formamide (N,N-isomer) (DMF)	68122	Hexachloroethane	67721
Dimethyl hydrazine (1,1-isomer)	57147	Hexadiene (1,4-isomer)	592450
Dimethyl terephthalate	120616	Hexamethylenediamine	124094
Ethyl acetate	141786	Methyl formate	107313
Ethyl acetoacetate	141979	Methyl phenol carbinol	98851
Ethyl acrylate	140885	m-Nitroaniline	99092
Ethyl chloroacetate	105395	Nitropropane	79469
Ethyl sodium oxalacetate	41892711	Paraldehyde	123637
Ethylene imine	151564	Peracetic acid	79210
Ethylenediamine	107153	Picoline (b-isomer)	108996
Ethylhexanol (2-isomer)	104767	Piperadine	110894
Ethylhexyl acrylate (2-isomer)	103117	Pyridine	110861
Formamide	75127	Sebacic acid	111206
Formic acid	64186	Sodium acetate	127093
Glycerol	56815	Sodium chloroacetate	3926623
Glycerol dichlorohydrin	26545737	Sorbic acid	110441
Glycerol triether	25791962	Sulfolane	126330
Glycine	56406	Terephthalic acid	100210
Glyoxal	107222	Tetrachloroethane (1,1,2,2-isomer)	79345

AFFECTED CHEMICAL PROCESSES (Continued)			
Chemical Name	CAS No.	Chemical Name	CAS No.
Tetrahydro-phthalic anhydride	85438	Trichloroethane (1,1,1-isomer)	71556
Tetramethylene-diamine	110601	Trichloroethane (1,1,2-isomer)	79005
Toluene 2,4 diamine	95807	Vinyl acetate	108054
Toluene 2,4 diisocyanate	584849	Vinylcyclohexene (4-isomer)	100403
Toluene diisocyanates	26471625	Vinylidene chloride	75354
Toluidine (o-isomer)	95534		
GROUP 3			
Acetoacetanilide	102012	Benzil (POM)	134816
Adipic acid	124049	Benzilic acid (POM)	76937
Aminobenzoic acid	1321115	Benzoic acid	65850
Aniline hydrochloride	142041	Benzoin (POM)	119539
Anisole	100663	Benzonitrile	100470
Anthranilic acid	118923	Benzotrichloride	98077
Anthraquinone (POM)	84651	Benzoyl chloride	96884
Benzaldehyde	100527	Benzyl acetate	140114
Benzamide	55210	Benzyl alcohol	100516
Benzyl benzoate (POM)	120514	Chlorophenol (o-isomer)	95578
Benzyl chloride	100447	Chlorotoluene (m-isomer)	108418
Benzyl dichloride	96873	Chlorotoluene (o-isomer)	95498
Benzylamine	100469	Chlorotoluene (p-isomer)	106434
Bisphenol A (POM)	80057	Cresol (m-isomer)	108394
Butylbenzyl phthalate	85687	Cresols, Cresylic acid	1319773

AFFECTED CHEMICAL PROCESSES (Continued)			
Chemical Name	CAS No.	Chemical Name	CAS No.
Chlorobenz-aldehyde	35913098	Di-o-tolyguanidine	97392
Chlorobenzoic acid	118912	Diphenyl thiourea (POM)	102089
Chlorobenzo-trichloride	2136814	Diphenylamine (POM)	122394
Chlorobenzoyl chloride	1321035	Dodecylphenol	27193868
Cresols (o-isomer)	95487	Ethylaniline (N-isomer)	103695
Cresols (p-isomer)	106445	Ethylaniline (o-isomer)	578541
Cyclohexylamine	108918	Hydroxybenzoic acid (p-isomer)	99967
Diaminobenzoic acid	27576041	Isophthalic acid	121915
Dichlorophenol (2,4-isomer)	120832	Isopropylphenol	25168063
Dicyclohexylamine	101837	m-Chlorophenol	108430
Diethylaniline N,N	91667	Methylaniline N	100618
Diethyl isophthalate	1087214	Methylcyclo-hexane	108872
Diethyl phthalate	84662	Methylcyclo-hexanone	1331222
Diisodecyl phthalate	26761400	Methylene diphenyl diiso-cyanate (MDI)	101688
Dimethyl phthalate	131113	M-xylene	108383
Dimethylaniline-N,N	121697	Nitroaniline (m-isomer)	99092
Dinitrobenzoic acid (3,5-isomer)	99343	Nitroanisole (o-isomer)	91236
Dinitrophenol (2,4-isomer)	51285	Nitroanisole (p-isomer)	100174
Dinitrotoluene (2,4-isomer) (DNT)	121142	Nitrobenzoic acid	27178832

AFFECTED CHEMICAL PROCESSES (Continued)			
Chemical Name	CAS No.	Chemical Name	CAS No.
Nitrophenol (4-isomer)	108027	Phthalonitrile	91156
Nitrophenol (o-isomer	88755	p-tert-Butyl toluene	98511
Nitrotoluene	1321126	Quinone	106514
Nitrotoluene (2 & 3 isomer)	88722 99081	Salicylic acid	69727
Nitrotoluene (4-isomer)	99990	Sodium benzoate	532321
Octylphenol	27193288	Sodium phenate	139026
Pentachlorophenol	87865	Stilbene	588590
Phenetidine (o-isomer)	94702	Sulfanilic acid	121573
Phenetidine (p-isomer)	156434	Tetrabromo-phthalic anhydride	632791
Phenol	108952	Tetrachloro-phthalic anhydride	117088
Phenolphthalein	77098	Toluene-sulfonamide	1333079
Phenolsulfonic acids	98679	Toluenesulfonic acids	104154
Phenyl anthranlic acid	91407	Toluenesulfonyl chloride	98599
Phloroglucinol	108736	Trichloroaniline (2,4,6-isomer)	634935
Phthalic acid	88993	Vinyl toluene	25013154
Phthalic anhydride	85449	Xylene sulfonic acid	25321419
Phthalimide	85416	Xylidine	1300738
GROUP 4			
Acrolein	107028	Allyl cyanide	109751
Acrylic acid	79107	Ammonium thiocyanate	1762954
Allyl chloride	107051	Bromonaphthalene	27497514

AFFECTED CHEMICAL PROCESSES (Continued)			
Chemical Name	CAS No.	Chemical Name	CAS No.
Butyronitrile	109740	Methyl isobutyl carbinol	108112
Carbon disulfide	75150	Methyl isobutyl ketone	108101
Chloronaphthalene	25586430	Methyl isocyanate	624839
Decahydronaphthalate	91178	Methyl mercaptan	74931
Diethyl phthalate	131179	Methyl methacrylate	80626
Diethylamine	109897	Methylamine	74895
Dimethyl ether-N,N	115106	Naphthalene	91203
Dimethyl sulfide	75183	Naphthalene sulfonic acid (a-isomer)	85472
Dimethyl sulfoxide	67685	Naphthalene sulfonic acid (b-isomer)	120183
Dimethylamine	124403	Naphthol (a-isomer)	90153
Ethyl chloride	75003	Naphthol (b-isomer)	135193
Glutaraldehyde	111308	Nitronaphthalene (1-isomer)	86577
Hexanetriol (1,2,6-isomer)	106694	Perchloromethyl-mercaptan	594423
Isophorone	78591	Phosgene	75445
Isopropyl acetate	108214	Propionaldehyde	123386
Methanol	67561	Propyl alcohol (n-isomer)	71238
Methyl acetate	79209	Propyl chloride	540545
Methyl acetoacetate	105453	Propylamine	107108
Methyl bromide	74839	Propylene dichloride	78875
Methyl chloride	74873	Sodium methoxide	124414
Methyl hydrazine	80344	Tetraethyl lead	78002

AFFECTED CHEMICAL PROCESSES (Continued)			
Chemical Name	CAS No.	Chemical Name	CAS No.
Tetrahydronaphthalene	119642	Trimethylcyclohexanol	933482
Triethylamine	121448	Trimethylcyclohexanone	2408379
Trimethylamine	75503		
GROUP 5			
Chemical Name	CAS No.	Chemical Name	CAS No.
Acetal	105577	Cyanuric chloride	108770
Acetone cyanohydrin	75865	Diacetone alcohol	123422
Bromoform	75252	Diaminophenol hydrochloride	137097
Butyl acrylate (n-isomer)	141322	Dibromoethane	74953
Butyl alcohol (s-isomer)	78922	Dichlorohydrin	96231
Butyl alcohol (t-isomer)	75650	Dicyanadimide	461585
Butyl benzoic acid (p-tert-isomer)	96737	Diethylaniline (2,6-isomer)	579668
Butylamine (s-isomer)	13952846	Difluoroethane	75376
Butylamine (t-isomer)	75649	Diisobutylene	25167708
Carbaryl	63252	Diisooctyl phthalate	27554263
Cellulose acetate	9004357	Dikotene	674828
Chlorodifluoroethane	75456	Dodecylaniline	26675174
Chlorophenols	25167800	Ethyl orthoformate	122510
Chlorosulfonic acid	7790945	Ethyl oxalate	95921
Cyanamide	420042	Ethylamine	75047
Cyanogen chloride	506774	Ethylcellulose	9004573
Cyanuric acid	108805	Ethylcyanoacetate	105566

AFFECTED CHEMICAL PROCESSES (Concluded)			
Chemical Name	CAS No.	Chemical Name	CAS No.
Hexachlorocyclo-pentadiene	77474	Polypropylene glycol	25322694
Hexamethylene glycol	629118	Resorcyclic acid	27138674
Hydrogen cyanide	74908	Sodium carboxymethyl cellulose	9004324
Isobutyl acrylate	106638	Sodium cyanide	143339
Isobutylene	115117	Sodium formate	141537
Ketone	463514	tert-Butylbenzene	98066
Mesityl oxide	141797	Tetramethyl lead	75741
Methacrylic acid	79414	Tetramethylethyl-enediamine	110189
Methallyl chloride	563473	Triisobutylene	7756947
Methyl acrylate	96333	Trimethylpentane (2,2,4-isomer)	540841
Methyl ethyl ketone	78933	Urea	57136
Methyl tert butyl ether	1634044	Xylenol	1300716
Methylpentynol	77758	Xylenol (2,3-isomer)	526750
n-Dodecylbenzene	121013	Xylenol (2,4-isomer)	105679
Neopentanoic acid	75989	Xylenol (2,5-isomer)	95874
Nonylphenol	25154523	Xylenol (2,6-isomer)	576261
N-Vinyl-2-pyrrolidine	88120	Xylenol (3,4-isomer)	95658
Polyethylene glycol	25322683	Xylenol (3,5-isomer)	108689

Appendix B
Volatile Hazardous Air Pollutants (VHAPs) Covered by the HON

Table B-1. Volatile Hazardous Air Pollutants (VHAPs) Covered by the HON

Chemical Name	CAS No.	Chemical Name	CAS No.
Acetaldehyde	75070	1,3-Butadiene	106990
Acetamide	60355	Caprolactam	105602
Acetonitrile	75058	Carbon disulfide	75150
Acetophenone	98862	Carbon tetrachloride	56235
2-Acetylaminofluorine	53963	Carbonyl sulfide	463581
Acrolein	107028	Catechol	120809
Acrylamide	79061	Chloroacetic acid	79118
Acrylic acid	79107	2-Chloro-acetophenone	532274
Acrylonitrile	107131	Chlorobenzene	108907
Allyl chloride	107051	Chloroform	67663
4-Aminobiphenyl	92671	Chloromethyl methyl ether	107302
Aniline	62533	Chloroprene	126998
o-Anisidine	90040	Cresols/Cresylic acid (isomers and mixture)	1319773
Benzene	71432	o-Cresol	95487
Benzidine	92875	m-Cresol	108394
Benzotrichloride	98077	p-Cresol	106445
Benzyl chloride	100447	Cumene	98828
Biphenyl	92524	2,4-D, salts and esters	94757
Bis(ethylhexyl) phthalate	117817	2,2-bis(p-chlorophenyl)-1,1-dichloroethylene	72559
Bis(chloromethyl) ether	542881	Diazomethane	334883
Bromoform	75252	Dibenzofurans	132649

VOLATILE HAZARDOUS AIR POLLUTANTS (VHAPs) (Continued)			
Chemical Name	CAS No.	Chemical Name	CAS No.
1,2-Dibromo-3-chloropropane	96128	1,2-Epoxybutane	106887
Dibutylphthalate	84742	Ethyl acrylate	140885
1,4-Dichlorobenzene (p)	106467	Ethyl benzene	100414
3,3-Dichlorobenzidene	91941	Ethyl carbamate	51796
Dichloroethyl ether	111444	Ethyl chloride	75003
1,3-Dichloroprene	542756	Ethylene dibromide	106934
Diethanolamine	111422	Ethylene dichloride	107062
N,N-Diethyl aniline N,N-Dimethylaniline	121697	Ethylene glycol	107211
Diethyl sulfate	64675	Ethylene oxide	75218
3,3'-Dimethoxybenzidine	119904	Ethylene thiourea	96457
Dimethyl aminoazobenzene	60117	Ethylidene dichloride	75343
3,3'-Dimethyl benzidine	119937	Formaldehyde	50000
Dimethyl carbamoyl chloride	79447	Glycol ethers	0
Dimethyl formamide	68122	Hexachlorobenzene	118741
1,1-Dimethyl hydrazine	57147	Hexachlorobutadiene	87683
Dimethyl phthalate	131113	Hexachloroethane	67721
Dimethyl sulfate	77781	Hexamethylene-1, 6-diisocyanate	822060
4,6-Dinitro-o-cresol and salts	534521	Hexamethylphos-phoramide	680319
2,4-Dinitrophenol	51285	Hexane	110543
2,4-Dinitrotoluene	121142	Hydrazine	302012
1,4-Dioxane	123911	Hydroquinone	123319
1,2-Diphenylhydrazine	122657	Isophorone	78519
Epichlorohydrin	106898	Maleic anhydride	108316

VOLATILE HAZARDOUS AIR POLLUTANTS (VHAPs) (Continued)			
Chemical Name	CAS No.	Chemical Name	CAS No.
Methanol	67561	N-Nitrosomorpholine	59892
Methyl bromide	74839	Phenol	108952
Methyl chloride	74873	p-Phenylenediamine	106503
Methyl chloroform	71556	Phosgene	75445
Methyl ethyl ketone	78933	Phthalic anhydride	85449
Methyl hydrazine	60344	Polychlorinated biphenyls	1336363
Methyl iodide	74884	1,3-Propane sultone	1120714
Methyl isobutyl ketone	108101	beta-Propiolactone	57578
Methyl isocyanate	624839	Propionaldehyde	123386
Methyl methacrylate	80626	Propoxur (Baygon)	114261
Methyl tert butyl ether	1634044	Propylene dichloride	78875
4,4-Methylene bis (2-chloroaniline)	101144	Propylene oxide	75569
Methylene chloride	75092	1,2-Propylenimine	75558
Methylene diphenyl diisocyanate	101688	Quinone	106514
4,4'-Methylene dianiline	101779	Styrene	100425
Naphthalene	91203	Styrene oxide	96093
Nitrobenzene	98953	2,3,7,8-Tetrachloro dibenzo-p-dioxin	1746016
4-Nitrobiphenyl	92933	1,1,2,2-Tetrachloro ethane	79345
4-Nitrophenol	100027	Tetrachloroethylene	127184
4-Nitropropane	79469	Toluene	108883
N-Nitroso-N-methyl urea	684935	2,4-Toluene diamine	95807
N-Nitrosodimethyl amine	62759	2,4-Toluene diiso-cyanate	584849

VOLATILE HAZARDOUS AIR POLLUTANTS (VHAPs) (Concluded)			
Chemical Name	CAS No.	Chemical Name	CAS No.
o-Toluidine	95534		
1,2,4-Trichlorobenzene	120821		
1,1,2-Trichloroethane	79005		
Trichloroethylene	79016		
2,4,5-Trichlorophenol	95954		
2,4,6-Trichlorophenol	88062		
Triethylamine	121448		
Trifluralin	1582098		
2,2,4-Trimethylpentane	540841		
Vinyl acetate	108054		
Vinyl bromide	593602		
Vinyl chloride	75014		
Vinylidene chloride	75354		
Xylenes (isomers and mixture)	1330207		
o-Xylene	95476		
m-Xylene	108383		
p-Xylene	106423		

Appendix C
Methods 21 and 22

Method 21—Determination of Volatile Organic Compound Leaks (40 CFR Part 60, Appendix A)

1. APPLICABILITY AND PRINCIPLE

1.1 Applicability. This method applies to the determination of volatile organic compound (VOC) leaks from process equipment. These sources include, but are not limited to, valves, flanges and other connections, pumps and compressors, pressure relief devices, process drains, open-ended valves, pump and compressor seal system degassing vents, accumulator vessel vents, agitator seals, and access door seals.

1.2 Principle. A portable instrument is used to detect VOC leaks from individual sources. The instrument detector type is not specified, but it must meet the specifications and performance criteria contained in Section 3. A leak definition concentration based on a reference compound is specified in each applicable regulation. This procedure is intended to locate and classify leaks only, and is not to be used a direct measure of mass emission rate from individual sources.

2. DEFINITIONS

2.1 Leak Definition Concentration. The local VOC concentration at the surface of a leak source that indicates that a VOC emission (leak) is present. The leak definition is an instrument meter reading based on a reference compound.

2.2 Reference Compound. The VOC species selected as an instrument calibration basis for specification of the leak definition concentration. (For example: If a leak definition concentration is 10,000 ppm as methane, then any source emission that results in a local concentration that yields a meter reading of 10,000 on an instrument meter calibrated with methane would be classified as a leak. In this example, the leak definition is 10,000 ppm, and the reference compound is methane.)

2.3 Calibration Gas. The VOC compound used to adjust the instrument meter reading to a known value. The calibration gas is usually the reference compound at a concentration approximately equal to the leak definition concentration.

2.4 No Detectable Emission. The total VOC concentration at the surface of a leak source that indicates that a VOC emission (leak) is not present. Since background VOC concentrations may exist, and to account for instrument drift and imperfect reproducibility, a difference between the source surface concentration and the local ambient concentration is determined. A difference based on meter readings of less than a concentration corresponding to the minimum readability specification indicates that a VOC emission (leak) is not present. (For example, if the leak definition in a regulation is 10,000 ppm, then the allowable increase in surface concentration versus local ambient concentration would be 500 ppm based on the instrument meter readings.)

2.5 Response Factor. The ratio of the known concentration of a VOC compound to the observed meter reading when measured using an instrument

calibrated with the reference compound specified in the applicable regulation.

2.6 Calibration Precision. The degree of agreement between measurements of the same known value, expressed as the relative percentage of the average difference between the meter readings and the known concentration to the known concentration.

2.7 Response Time. The time interval from a step change in VOC concentration at the input of the sampling system to the time at which 90 percent of the corresponding final value is reached as displayed on the instrument readout meter.

3. APPARATUS

3.1 Monitoring Instrument.

a. The VOC instrument detector shall respond to the compounds being processed. Detector types which may meet this requirement include, but are not limited to, catalytic oxidation, flame ionization, infrared absorption, and photoionization.

b. The instrument shall be capable of measuring the leak definition concentration specified in the regulation.

c. The scale of the instrument meter shall be readable to ±5 percent of the specified leak definition concentration.

d. The instrument shall be equipped with a pump so that a continuous sample is provided to the detector. The nominal sample flow rate shall be 1/2 to 3 liters per minute.

e. The instrument shall be intrinsically safe for operation in explosive atmospheres as defined by the applicable U.S.A. standards (e.g., National Electrical Code by the National Fire Prevention Association).

3.1.2 Performance Criteria.

a. The instrument response factors for the individual compounds to be measured must be less than 10.

b. The instrument response time must be equal to or less than 30 seconds. The response time must be determined for the instrument configuration to be used during testing.

c. The calibration precision must be equal to or less than 10 percent of the calibration gas value.

d. The evaluation procedure for each parameter is given in Section 4.4.

3.1.3 Performance Evaluation Requirements.

a. A response factor must be determined for each compound that is to be measured, either by testing or from reference sources. The

response factor tests are required before placing the analyzer into service, but do not have to be repeated as subsequent intervals.

b. The calibration precision test must be completed prior to placing the analyzer into service, and at subsequent 3-month intervals or at the next use whichever is later.

c. The response time test is required before placing the instrument into service. If a modification to the sample pumping system or flow configuration is made that would change the response time, a new test is required before further use.

3.2 Calibration Gases.

3.2.1 The monitoring instrument is calibrated in terms of parts per million by volume (ppm) of the reference compound specified in the applicable regulation. The calibration gases required for monitoring and instrument performance evaluation are a zero gas (air, less than 10 ppm VOC) and a calibration gas in air mixture approximately equal to the leak definition specified in the regulation. If cylinder calibration gas mixtures are used, they must be analyzed and certified by the manufacturer to be within ±2 percent accuracy, and a shelf life must be specified. Cylinder standards must be either reanalyzed or replaced at the end of the specified shelf life. Alternatively, calibration gases may be prepared by the user according to any accepted gaseous standards preparation procedure that will yield a mixture accurate to within ±2 percent. Prepared standards must be replaced each day of use unless it can be demonstrated that degradation does not occur during storage.

3.2.2 Calibrations may be performed using a compound other than the reference compound if a conversion factor is determined for that alternative compound so that the resulting meter readings during source surveys can be converted to reference compound results.

4. PROCEDURES

4.1 Pretest Preparations. Perform the instrument evaluation procedures given in Section 4.4 if the evaluation requirements of Section 3.1.3 have not been met.

4.2 Calibration Procedures. Assemble and start up the VOC analyzer according to the manufacturer's instructions. After the appropriate warmup period and zero internal calibration procedure, introduce the calibration gas into the instrument sample probe. Adjust the instrument meter readout to correspond to the calibration gas value. (Note: If the meter readout cannot be adjusted to the proper value, a malfunction of the analyzer is indicated and corrective actions are necessary before use.)

4.3 Individual Source Surveys.

4.3.1 **Type I--Leak Definition Based on Concentration.** Place the probe inlet at the surface of the component interface where leakage could occur. Move the probe along the interface periphery while observing the

instrument readout. If an increased meter reading is observed, slowly sample the interface where leakage is indicated until the maximum meter reading is obtained. Leave the probe inlet at this maximum reading location for approximately two times the instrument response time. If the maximum observed meter reading is greater than the leak definition in the applicable regulation, record and report the results as specified in the regulation reporting requirements. Examples of the application of this general technique to specific equipment types are:

a. Pump or Compressor Seals--If applicable, determine the type of shaft seal. Perform a survey of the local area ambient VOC concentration and determine if detectable emissions exist as described above.

b. Seal System Degassing Vents, Accumulator Vessel Vents, Pressure Relief Devices. If applicable, observe whether the applicable ducting or piping exists. Also, determine if any sources exist in the ducting or piping where emissions could occur before the control device. If the required ducting or piping exists and there are no sources where the emissions could be vented to the atmosphere before the control device, then it is presumed that no detectable emissions are present. If there are sources in the ducting or piping where emissions could be vented or sources where leaks could occur, the sampling surveys described in this section shall be used to determine if detectable emissions exist.

4.3.3 Alternative Screening Procedure.

4.3.3.1 A screening procedure based on the formation of bubbles in a soap solution that is sprayed on a potential leak source may be used for those sources that do not have continuously moving parts, that do not have surface temperatures greater than the boiling point or less than the freezing point of the soap solution, that do not have open areas to the atmosphere that the soap solution cannot bridge, or that do not exhibit evidence of liquid leakage. Sources that have these conditions present must be surveyed using the instrument techniques of Section 4.3.1 or 4.3.2.

4.3.3.2 Spray a soap solution over all potential leak sources. The soap solution may be a commercially available leak detection solution or may be prepared using concentrated detergent and water. A pressure sprayer or squeeze bottle may be used to dispense the solution. Observe the potential leak sites to determine if any bubbles are formed. If no bubbles are observed, the source is presumed to have no detectable emissions or leaks as applicable. If any bubbles are observed, the instrument techniques of Section 4.3.1 or 4.3.2 shall be used to determine if a leak exists, or if the source has detectable emissions, as applicable.

4.4.1 Response Factor.

4.4.1.1 Calibrate the instrument with the reference compound as specified in the applicable regulation. for each organic species that is to be measured during individual source surveys, obtain or prepare a known standard in air at a concentration of approximately 80 percent of

the applicable leak definition unless limited by volatility or explosivity. In these cases, prepare a standard at 90 percent of the saturation concentration, or 70 percent of the lower explosive limit, respectively. Introduce this mixture to the analyzer and record the observed meter reading. Introduce zero air until a stable reading is obtained. Make a total of three measurements by alternating between the known mixture and zero air. Calculate the response factor for each repetition and the average response factor.

4.4.1.2 Alternatively, if response factors have been published for the compounds of interest for the instrument or detector type, the response factor determination is not required, and existing results may be referenced. Examples of published response factors for flame ionization and catalytic oxidation detectors are included in the Bibliography.

4.4.2 **Calibration Precision.** Make a total of three measurements by alternately using zero gas and the specified calibration gas. Record the meter readings. Calculate the average algebraic difference between the meter readings and the known value. Divide this average difference by the known calibration value and multiply by 100 to express the resulting calibration precision as a percentage.

4.4.3 **Response Time.** Introduce zero gas into the instrument sample probe. When the meter reading has stabilized, switch quickly to the specified calibration gas. Measure the time from switching to when 90 percent of the final stable reading is attained. Perform this test sequence three times and record the results. Calculate the average response time.

5. BIBLIOGRAPHY

1. DuBose, D.A., and G.E. Harris. Response Factors of VOC Analyzers at a Meter Reading of 10,000 ppmv for Selected Organic Compounds. U.S. Environmental Protection Agency, Research Triangle Park, NC. Publication No. EPA 600/2-81051. September 1981.

2. Brown, G.E., et al. Response Factors of VOC Analyzers Calibrated with Methane for Selected Organic Compounds. U.S. Environmental Protection Agency, Research Triangle Park, NC. Publication No. EPA 600/2-81-022. May 1981.

3. DuBose, D.A. et al. Response of Portable VOC Analyzers to Chemical Mixtures. U.S. Environmental Protection Agency, Research Triangle Park, NC. Publication No. EPA 600/2-81-110. September 1981.

Method 22—Visual Determination of Fugitive Emissions from Material Sources and Smoke Emissions from Flares (40 CFR Part 60, Appendix A)

1. INTRODUCTION

1.1 This method involves the visual determination of fugitive emissions, i.e., emissions not emitted directly from a process stack or duct. Fugitive emissions include emissions that (1) escape capture by process equipment exhaust hoods; (2) are emitted during material transfer; (3) are emitted from buildings housing material processing or handling equipment; and (4) are emitted directly from process equipment. this method is used also to determine visible smoke emissions from flares used for combustion of waste process materials.

1.2 This method determines the amount of time that any visible emissions occur during the observation period, i.e., the accumulated emission time. This method does not require that the opacity of emissions be determined. Since this procedure requires only the determination of whether a visible emission occurs and does not require the determination of opacity levels, observer certification according to the procedures of Method 9 are not required. However, it is necessary that the observer is educated on the general procedures for determining the presence of visible emissions. As a minimum, the observer must be trained and knowledgeable regarding the effects on the visibility of emissions caused by background contrast, ambient lighting, observer position relative to lighting, wind, and the presence of uncombined water (condensing water vapor). This training is to be obtained from written materials found in Citations 1 and 2 in the Bibliography or from the lecture portion of the Method 9 certification course.

2. APPLICABILITY AND PRINCIPLE

2.1 **Applicability.**

2.1.1 This method applies to the determination of the frequency of fugitive emissions from stationary sources (located indoors or outdoors) when specified as the test method for determining compliance with new source performance standards.

2.1.2 This method also is applicable for the determination of the frequency of visible smoke emissions from flares.

2.2 **Principle.** Fugitive emissions produced during material processing, handling, and transfer operations or smoke emissions from flares are visually determined by an observer without the aid of instruments.

3. DEFINITIONS

3.1 **Emission Frequency.** Percentage of time that emissions are visible during the observation period.

3.2 **Emission Time.** Accumulated amount of time that emissions are visible during the observation period.

3.3 **Fugitive Emissions.** Pollutant generated by an affected facility which is not collected by a capture system and is released to the atmosphere.

3.4 **Smoke Emissions.** Pollutant generated by combustion in a flare and occurring immediately downstream of the flame. Smoke occurring within the flame, but not downstream of the flame, is not considered a smoke emission.

3.5 **Observation Period.** Accumulated time period during which observations are conducted, not to be less than the period specified in the applicable regulation.

4. EQUIPMENT

4.1 **Stopwatches.** Accumulative type with unit divisions of at least 0.5 seconds; two required.

4.2 **Light Meter.** Light meter capable of measuring illuminance in the 50 to 200-lux range, required for indoor observations only.

5. PROCEDURE

5.1 **Position.** Survey the affected facility or building or structure housing the process to be observed and determine the locations of potential emissions. If the affected facility is located inside a building, determine an observation location that is consistent with the requirements of the applicable regulation (i.e., outside observation of emissions escaping the building/structure or inside observation of emissions directly emitted from the affected facility process unit). Then select a position that enables a clear view of the potential emission point(s) of the affected facility or of the building or structure housing the affected, as appropriate for the applicable subpart. A position at least 15 feet, but not more than 0.25 miles, from the emission source is recommended. For outdoor locations, select a position where the sun is not directly in the observer's eyes.

5.2 **Field Records.**

5.2.1 **Outdoor Location.** Record the following information on the field data sheet (Figure 22-1): Company name, industry, process unit, observer's name, observer's affiliation, and date. Record also the estimated wind speed, wind direction, and sky condition. Sketch the process unit being observed, and note the observer location relative to the source and the sun. Indicate the potential and actual emission points on the sketch.

5.2.2 **Indoor Location.** Record the following information on the field data sheet (Figure 22-2): Company name, industry, process unit, observer's name, observer's affiliation, and date. Record as appropriate the type, location, and intensity of lighting on the data sheet. Sketch the process unit being observed, and note observer location relative to the source. Indicate the potential and actual fugitive emission points on the sketch.

FUGITIVE OR SMOKE EMISSION INSPECTION
OUTDOOR LOCATION

Company _____	Observer _____
Location _____	Affiliation _____
Company representative _____	Date _____
Sky Conditions _____	Wind direction _____
Precipitation _____	Wind speed _____
Industry _____	Process unit _____

Sketch process unit; indicate observer position relative to source and sun; indicate potential emission points and/or actual emission points.

OBSERVATIONS

	Clock time	Observation period duration, min:sec	Accumulated emission time, min:sec
Begin Observation			
End observation			

Figure 22-1

Fugitive Emission Inspection Indoor Location Table

FUGITIVE EMISSION INSPECTION
INDOOR LOCATION

Company _____ Observer _____

Location _____ Affiliation _____

Company Representative _____ Date _____

Industry _____ Process unit _____

Light type (fluorescent, incandescent, natural _____

Light location (overhead, behind observer, etc.) _____

Illuminance (lux or footcandles) _____

Sketch process unit; indicate observer position relative to source; indicate potential emission points and/or actual emission points.

OBSERVATIONS	Clock time	Observation period duration, min:sec	Accumulated emission, time, min:sec
Beginning observation	_____		
	_____	_____	_____
	_____	_____	_____
	_____	_____	_____
	_____	_____	_____
	_____	_____	_____
End observation	_____		

Figure 22-2

5.3 Indoor Lighting Requirements. for indoor locations, use a light meter to measure the level of illumination at a location as close to the emission sources(s) as is feasible. An illumination of greater than 100 lux (10 foot candles) is considered necessary for proper application of this method.

5.4 Observations. Record the clock time when observations begin. Use one stopwatch to monitor the duration of the observation period; start this stopwatch when the observation period begins. If the observation period is divided into two or more segments by process shutdowns or observer rest breaks, stop the stopwatch when a break begins and restart it without resetting when the break ends. Stop the stopwatch at the end of the observation period. The accumulated time indicated by this stopwatch is the duration of observation period. When the observation period is completed, record the clock time. During the observation period, continuously watch the emission source. Upon observing an emission (condensed water vapor is not considered an emission), start the second accumulative stopwatch; stop the watch when the emission stops. Continue this procedure for the entire observation period. The accumulated elapsed time on this stopwatch is the total time emissions were visible during the observation period, i.e., the emission time.

5.4.1 Observation Period. Choose an observation period of sufficient length to meet the requirements for determining compliance with the emission regulation in the applicable subpart. When the length of the observation period is specifically stated in the applicable subpart, it may not be necessary to observe the source for this entire period if the emission time required to indicate noncompliance (based on the specified observation period) is observed in a shorter time period. In other words, if the regulation prohibits emissions for more than 6 minutes in any hour, then observations may (optional) be stopped after an emission time of 6 minutes is exceeded. Similarly, when the regulation is expressed as an emission frequency and the regulation prohibits emissions for greater than 10 percent of the time in any hour, then observations may (optional) be terminated after 6 minutes of emission are observed since 6 minutes is 10 percent of an hour. In any case, the observation period shall not be less than 6 minutes in duration. In some cases, the process operation may be intermittent or cyclic. In such cases, it may be convenient for the observation period to coincide with the length of the process cycle.

5.4.2 Observer Rest Breaks. Do not observe emissions continuously for a period of more than 15 to 20 minutes without taking a rest break. For sources requiring observation periods of greater than 20 minutes, the observer shall take a break of not less than 5 minutes and not more than 10 minutes after every 15 to 20 minutes of observation. If continuous observations are desired for extended time periods, two observers can alternate between making observations and taking breaks.

5.4.3 Visual Interference. Occasionally, fugitive emissions from sources other than the affected facility (e.g., road dust) may prevent a clear view of the affected facility. This may particularly be a problem during periods of high wind. If the view of the potential emission points is obscured to such a degree that the observer questions the

validity of continuing observations, then the observations are terminated, and the observer clearly notes this fact on the data form.

5.5 Recording Observations. Record the accumulated time of the observation period on the data sheet as the observation period duration. Record the accumulated time emissions were observed on the data sheet as the emission time. Record the clock time the observation period began and ended, as well as the clock time any observer breaks began and ended.

6. CALCULATIONS

If the applicable subpart requires that the emission rate be expressed as an emission frequency (in percent), determine this value as follows: Divide the accumulated emission time (in seconds) by the duration of the observation period (in seconds) or by any minimum observation period required in the applicable subpart, if the actual observation period is less than the required period, and multiply this quotient by 100.

7. BIBLIOGRAPHY

1. Missan, Robert and Arnold Stein. Guidelines for Evaluation of Visible Emissions Certification, Field Procedures, Legal Aspects, and Background Material. EPA Publication No. EPA-340/1-75-007. April 1975.

2. Wohlschlegel, P., and D.E. Wagoner. Guideline for Development of a Quality Assurance Program: Volume IX--Visual Determination of Opacity Emissions from Stationary Sources. EPA Publication No. EPA-650/4-74-005i. November 1975.

Appendix D
Response Factors

Table D-1. Response Factors for Foxboro OVA-108 and Bacharach TLV Sniffer at 10,000 ppmv Response*

Compound	Response factor OVA-108	Response factor TLV sniffer
Acetic acid	1.64	15.60
Acetic ahydride	1.39	5.88
Acetone	0.80	1.22
Acetonitrile	0.95	1.18
Acetyl chloride	2.04	2.72
Acetylene	0.39	B
Acrylic acid	4.59	B
Acrylonitrile	0.97	3.49 I
Allene	0.64	15.00
Allyl alcohol	0.96	X
Amylene	0.44	1.03
Anisole	0.92	3.91
Benzene	0.29	1.07
Bromobenzene	0.40	1.19
Butadiene, 1,3-	0.57	10.90
Butane, N	1.44 I	4.11
Butanol, sec-	0.76	1.25
Butanol, tert	0.53	2.17
Butene, 1-	0.56	5.84
Butyl acetate	0.66	1.38
Butyl acrylate, N-	0.70	2.57 I
Butyl ether, N	2.60	3.58 I
Butyl ether, sec	0.35	1.15
Butylamine, N	0.69	2.02
Butylamine, sec	0.70	1.56
Butylamine, tert-	0.63	1.95
Butyraldehyde, N-	1.29	2.30
Butyronitrile	0.52	1.47 I
Carbon disulfide	B	3.92
Chloroacetaldehyde	9.10	5.07
Chlorobenzene	0.38	0.88
Chloroethane	5.38 I	3.90 P
Chloroform	9.28	B
Chloropropene, 1-	0.67	0.87
Chloropropene, 3-	0.80	1.24
Chlorotoluene, M-	0.48	0.91
Chlorotoluene, O-	0.48	1.06
Chlorotoluene, P-	0.56	1.17 I
Crotonaldehyde	1.25	B
Cumene	1.87	B
Cyclohexane	0.47	0.70
Cychohexanone	1.50	7.04
Cyclohexene	0.49	2.17
Cyclohexylamine	0.57	1.38
Diacetyl	1.54	3.28

Table D-1 (continued)

Compound	Response factor OVA-108	Response factor TLV sniffer
Dichloro-1-propene,2,3-	0.75	1.75
Dichloroethane, 1,1-	0.78	1.86
Dichloroethane,1,2-	0.95	2.15
Dichloroethylene,cis,1,2-	1.27	1.63
Dichloroethylene,trans,1,1-	1.11	1.66
Dichloromethane	2.81	3.85
Dichloropropane,1,2-	1.03	1.54
Diisobutylene	0.35	1.41
Dimethoxy ethane,1,2-	1.22	1.52
Dimethylformamide,N,N-	4.19	5.29
Dimethylhydrazine,1,1-	1.03	2.70
Dioxane	1.48	1.31
Epichlorohydrin	1.69	2.03
Ethane	0.65	0.69 I
Ethanol	1.78	X
Ethoxy ethanol, 2-	1.55	1.82
Ethyl acetate	0.86	1.43
Ethyl acrylate	0.77	X
Ethyl chloroacetate	1.99	1.59
Ethyl ether	0.97	1.14
Ethylbenzene	0.73	4.74 D
Ethylene	0.71	1.56
Ethylene oxide	2.46	2.40
Ethylenediamine	1.73	3.26
Formic acid	14.20	B
Glycidol	6.88	5.55
Heptane	0.41 I	0.73
Hexane,N-	0.41	0.69
Hexene,1-	0.49	4.69 D
Hydroxyacetone	6.90	15.20
Isobutane	0.41	0.55
Isobutylene	3.13	B
Isoprene	0.59	X
Isopropanol	0.91	1.39
Isopropyl acetate	0.71	1.31
Isopropyl chloride	0.68	0.98
Isovaleraldehyde	0.64	2.19 D
Mesityl oxide	1.09	3.14
Methacrolein	1.20	3.49 D
Methanol	4.39 P	2.01
Methoxy-ethanol,2-	2.25	3.13
Methyl acetate	1.74	1.85
Methyl acetylene	0.61	6.79
Methyl chloride	1.44	1.84
Methyl ethyl ketone	0.64	1.12
Methyl formate	3.11	1.94

Table D-1 (continued)

Compound	Response factor OVA-108	Response factor TLV sniffer
Methyl methacrylate	0.99	2.42
Methyl-2-pentanol,4-	1.66	2.00
Methyl-2-pentone,4-	0.56	1.63
Methyl-3-butyn-2-ol,2	0.59	X
Methylcyclohexane	0.48	0.84
Methylcyclohexene	0.44	2.79
Methylstyrene,a-	13.90	B
Nitroethane	1.40	3.45
Nitromethane	3.52	7.60
Nitropropane	1.05	2.02
Nonane-n	1.54	11.10
Octane	1.03	2.11
Pentane	0.52	0.83
Picoline,2-	0.43	1.18
Propane	0.55 I	0.60 P
Propionaldehyde	1.14	1.71
Proponic acid	1.30	5.08 D
Propyl alcohol	0.93	1.74
Propylbenzene,n-	0.51	B
Propylene	0.77	1.74 I
Propylene oxide	0.83	1.15
Pyridine	0.47	1.16
Styrene	4.22	B
Tetrachloroethane,1,1,1,2	4.83 D	6.91
Tetrachloroethane,1,1,2,2	7.89	25.40
Tetrachloroethylene	2.97	B
Toluene	0.39	2.68 D
Trichloroethane,1,1,1-	0.80	2.40
Trichloroethane,1,1,2-	1.25	3.69
Trichloroethylene	0.95	3.93
Trichloropropane,1,2,3-	0.96	1.99
Triethylamine	0.51	1.48
Vinyl chloride	0.84	1.06
Vinylidene chloride	1.12	2.41
Xylene, p-	2.12	7.87
Xylene, m-	0.40	5.87 D
Xylene, O-	0.43	1.40

I = Inverse estimation method
D = Possible outliers in data
N = Narrow range of data
X = No data available
B = 10,000 ppmv response unachievable
P = Suspect points eliminated.

*U.S. Environmental Protection Agency. Response Factors of VOC Analyzers at a Meter Reading of 10,000 ppmv for Selected Organic Compounds. EPA-600/2-81-051. NTIS:PB81234817. Research Triangle Park, North Carolina. September 1981.

Table D-2. Tested Compounds Which Appear To Be Unable To Achieve an Instrument Response of 10,000 ppmv at Any Feasible Concentration*

Instrument[a]	OVA		TLV
CAS[b]	Compound Name	CAS[b]	Compound Name
--	Acetyl-1-propanol, 3-	98-86-2	Acetophenone
75-1-50	Carbon disulfide	--	Acetyl-1-propanol, 3-
56-23-5	Carbon tetrachloride	74-86-2	Acetylene
--	Dichloro-1-propanol, 2,3	79-10-7	Acrylic acid
--	Dichloro-2-propanol, 1,3	100-52-7	Benzaldehyde
--	Diisopropyl benzene, 1,3	100-47-0	Benzonitrile
--	Dimethylstyrene, 2,4	98-88-4	Benzoyl chloride
1221	Freon 12	100-44-7	Benzyl chloride
98-01-1	Furfural	--	Butylbenzene, Tert-
--	Methyl-2,4-pentanediol,2	56-23-5	Carbon tetrachloride
1660	Monoethanolamine	67-66-3	Chloroform
98-95-3	Nitrobenzene	4170-30-0	Crotonaldehyde
108-95-2	Phenol	98-82-8	Cumene
--	Phenyl-2-propanol, 2-	108-93-0	Cyclohexanol
		--	Dichloro-1-propanol, 2,3
		--	Dichloro-2-propanol, 1,3
		--	Diisopropyl benzene, 2,4
		--	Dimethylstyrene, 2,4
		64-18-6	Formic acid
		1221	Freon 12
		98-01-1	Furfural
		115-11-7	Isobutylene
		--	Methyl-2,4-pentanediol
		98-83-9	Methylstyrene, A-
		1660	Monoethanolamine
		108-95-2	Phenol
		--	Phenyl-2-propanol, 2-
		--	Propylbenzene, N-
		100-42-05	Styrene
		2860	Tetrachloroethylene

[a]OVA and TLV are two portable hydrocarbon analyzers that have been used in previous studies of fugitive emissions. Operating with a flame ionization detector (FID), OVA measures nonmethane hydrocarbon emissions; TLV measures total hydrocarbon emissions.

[b]CAS numbers refer to the Chemical Abstracts Registry numbers of specific chemicals, isomers, or mixtures of chemicals.

*U.S. Environmental Protection Agency. Response Factors of VOC Analyzers at a Meter Reading of 10,000 ppmv for Selected Organic Compounds. EPA-600/2-81-051. NTIS:PB81234817. Research Triangle Park, North Carolina. September 1981.

Table D-3. Response Factors for AID Model 580 and Model 585 Photoionization Type Organic Vapor Analyzers*

Compound	Ionization potential, eV	Response factor
Acetone	9.58	1.7
Acetophenone	N.D.	4.2
Acrolein	N.D.	25.0
Ammonia	10.15	24.5
Aniline	7.70	0.6
Benzene	9.25	0.7
1,3 Butadiene	9.07	1.0
Carbon disulfide	10.0	2.3
Chlorobenzene	9.07	0.5
Cyclohexane	9.98	2.1
1,2-Dichloroethane	N.D.	50.0
Diethylamine	N.D.	2.0
Dimethyl sulfide	8.69	1.3
Ethyl benzene	8.75	1.7
Ethylene oxide	10.57	33.8
Ethyl ether	9.53	1.5
Hexane	10.18	11.3
Hydrogen sulfide	10.45	7.3
Isopropanol	10.16	19.8
Methyl ethyl ketone	9.53	1.6
Methyl isocyanate	10.57	12.5
Methyl mercaptan	9.4	1.3
Methyl methacrylate	N.D.	4.2
Nitric oxide	9.25	44.9
Ortho chloro toluene	8.83	0.5
Ortho xylene	8.56	0.8
Pyridine	9.32	0.6
Styrene	N.D.	3.3
Sec butyl bromide	9.98	1.7
Tetrachloroethene	9.32	1.6
Tetrachloroethylene	N.D.	1.9
Tetrahydrofuran	9.54	3.7
Toluene	8.82	0.5
Trichloroethylene	N.D.	1.3

ND = Not Detected
*Analytical Instrument Development, Inc. PID - Different Ionization Sources and a Comprehensive List of Ionization Potentials, Bulletin AN-145, undated.

Table D-4. Response Factors for the MIRAN Model 1A/80 Infrared Analyzer*

Compound	Wave-length, µm	Actual concentration, ppmv	Instrument concentration, ppmv	Response factor
Acetal	9.5	1,000	6,690	0.149
		5,000	23,400	0.214
		10,000	27,200	0.368
Acetyl-1-propanol, 3-	3.3	500	247	2.02
		1,000	813	1.23
	9.5	100	39	2.55
		500	217	2.30
		1,000	406	2.46
Benzoyl chloride	6.35	100	4,870	0.02
		500	5,080	0.10
		1,000	5,420	0.19
Carbon tetrachloride	5.7	500	115	4.35
		1,000	232	4.31
		10,000	390	25.6
Chloro-acetaldehyde	6.35	500	4,840	0.103
		1,000	5,680	0.176
		10,000	6,760	1.48
	9.5	500	76	6.58
		1,000	228	4.39
		10,000	1,880	5.32
	13.5	500	709	0.705
		1,000	2,300	0.435
		10,000	21,800	0.459
Chloroform	13.5	1,000	6,680	0.150
		5,000	22,200	0.225
		10,000	34,200	0.292
Dichloro-1-propanol,2,3-	3.3	1,200	64.9	18.5
Diisopropyl Benzene,1,3-	6.35	500	134	3.75
		1,225	507	2.42
	5.7	100	311	0.331
		500	343	1.47
		1,225	380	3.22
Diketene	3.3	5,000	354	14.1
		10,000	1,240	8.06

Table D-4 (continued)

Compound	Wave-length, µm	Actual concentration, ppmv	Instrument concentration, ppmv	Response factor
	5.7	1,000	2,280	0.439
		5,000	6,390	0.782
		10,000	8,600	1.16
	9.5	1,000	69.4	14.4
		5,000	377	13.4
		10,000	580	17.2
Dimethylsulfide	5.7	1,000	822	1.22
		5,000	1,010	4.95
		10,000	1,180	8.47
	6.35	1,000	2,480	0.403
		5,000	4,590	1.09
		10,000	6,540	1.53
	9.5	1,000	15.3	65.4
		5,000	120	41.7
		10,000	270	37.0
Ethanol	3.3	1,000	3,830	0.261
		5,000	18,500	0.270
		10,000	34,300	0.292
	3.4	1,000	430	2.33
		5,000	3,420	1.46
		10,000	7,530	1.33
Ethylene glycol dimethyl ether	3.3	1,000	5,110	0.196
		5,000	21,100	0.237
		10,000	33,800	0.296
	3.4	1,000	2,310	0.433
		5,000	11,700	0.427
		10,000	20,600	0.485
	3.6	1,000	284	3.52
		5,000	1,870	2.67
		10,000	3,920	2.55
Ethylene glycol monoethyl ether acetate	3.6	1,000	50.8	19.7
		2,000	158	12.7
	5.7	200	2,590	0.0772
		1,000	5,110	0.196
		2,000	6,960	0.287

Table D-4 (continued)

Compound	Wave-length, μm	Actual concentration, ppmv	Instrument concentration, ppmv	Response factor
	8.8	1,000	261	3.83
		2,000	808	2.48
	9.5	200	472	0.424
		1,000	2,190	0.457
		2,000	3,470	0.576
Formaldehyde	3.3	500	266	1.88
		1,000	916	1.09
	3.4	1,000	72.4	13.8
Formic acid	5.7	500	4,990	0.100
		5,000	23,600	0.212
		10,000	31,300	0.319
	8.8	5,000	1,000	5.00
		10,000	2,920	3.42
	9.5	500	1,190	0.420
		5,000	9,120	0.548
		10,000	14,100	0.709
Freon 12	6.35	1212.5	5,940	0.204
		2,425	6,470	0.375
		4,850	7,490	0.648
	8.8	1212.5	1,714	0.707
		2,425	3,130	0.775
		4,850	4,680	1.04
Furfural	13.5	100	656	0.152
		500	5,470	0.0914
		1,200	12,200	0.0984
Glycidol	3.3	100	262	0.382
	3.6	100	572	0.175
	5.7	100	3,100	0.323
	6.35	100	6,540	0.0153
	9.5	1,000	132	0.758
Hydroxyacetone	5.7	100	1,950	0.0513

Table D-4 (continued)

Compound	Wave-length, µm	Actual concentration, ppmv	Instrument concentration, ppmv	Response factor
	6.35	100	6,870	0.0146
	9.5	100	24.6	4.07
Methyl styrene, -	3.3	1,030	976	1.06
		5,000	2,830	1.77
	5.7	103	330	0.312
		1,030	1,230	0.837
		5,000	1,570	3.18
	6.35	1,010	4,490	0.229
		5,000	6,960	0.718
	9.5	1,030	73.6	14.0
		5,000	178	28.1
	13.5	1,030	167	6.17
		5,000	948	5.27
Methylene chloride	3.3	5,000	1,740	2.87
		10,000	3,740	2.67
Pentanethiol,1-	13.5	5,000	5,300	0.943
		10,000	10,500	0.952
Perchloromethyl-mercaptan	3.3	5,000	612	8.17
	3.6	5,000	64.0	78.1
	5.7	500	1,730	0.289
		1,000	3,410	0.293
		5,000	7,660	0.653
	8.8	5,000	426	11.7
	9.5	500	36.7	13.6
		1,000	132	7.58
		5,000	303	16.5
Propylene chlorohydrin	13.5	500	3,800	0.132
		1,000	8,510	0.118
		5,000	38,600	0.130

Table D-4 (continued)

Compound	Wave-length, µm	Actual concentration, ppmv	Instrument concentration, ppmv	Response factor
Tetrachloroethane, 1,1,2,1-	3.3	5,000	582	8.59
		10,000	1,010	9.90
	8.8	10,000	404	24.8
	13.8	1,000	20,000	0.0500
		5,000	73,000	0.0685
		10,000	101,000	0.0990
Trichloroethane,1,1,1-	3.3	1,000	266	3.76
		5,000	2,910	1.72
		10,000	5,920	1.69
	3.4	5,000	38.8	129.0
		10,000	421	23.8
Trichlorotrifluoro-ethane, 1,1,2-	8.8	1,000	5,840	0.171
		5,000	16,100	0.311
		10,000	18,500	0.541
	9.5	1,000	977	1.02
		5,000	3,690	1.36
		10,000	6,280	1.59
	13.5	5,000	1,100	4.55
		10,000	2,270	4.41

*U.S. Environmental Protection Agency. Evaluation of Potential VOC Screening Instruments. EPA-600/7-82-063. NTIS:PB83139733. Research Triangle Park, North Carolina. November 1982.

Table D-5. Response Factors for the HNU Systems, Inc., Model PI-101 Photoionization Analyzer*

Compound	Actual concentration	Instrument concentration	Response factor
Acetal	1,000	925	1.1
	5,000	7,200	0.69
	10,000	13,200	0.76
Carbon disulfide	1,000	1,990	0.50
	10,000	12,900	0.78
Carbon tetrachloride	500	784	0.64
	1,000	1,070	0.94
	10,000	6,070	1.6
Chloroform	1,000	756	1.3
	5,000	2,550	2.0
	10,000	5,250	1.9
Diketene	1,000	148	6.8
	5,000	318	16.0
	10,000	460	22.0
Perchloromethyl mecaptan	5,000	103	48.0
Toluene	1,000	1,180	0.85
Tetrachloroethane,1,1,2,2-	1,000	736	1.4
	5,000	1,170	4.3
	10,000	1,880	5.3
Trichloroethane,1,1,	1,000	1,020	0.98
	5,000	6,170	0.81
	10,000	9,430	1.1
Trichlorotrifluoroethane 1,1,2-	5,000	155	32.0
	10,000	430	23.0

*U.S. Environmental Protection Agency. Evaluation of Potential VOC Screening Instruments. EPA-600/7-82-063. NTIS:PB83139733. Research Triangle Park, North Carolina. November 1982.

*Appendix E**
Example Semiannual NESHAP Report
(illustrating a pump repair record)

* Appendices E through J are handout materials from: U.S. Environmental Protection Agency. 1990. Inspection Techniques for Fugitive VOC Emission Sources: Course Module S380. EPA-340/1-90-026. Washington, DC. September.

'3 3 11 PM '87

October 20, 1987

Under the provisions of 401 KAR 57:040, submits this semi-annual report of monitoring of Benzene fugitive emissions at the

This report is for the period April 1, 1987 to September 10, 1987. Attachment I outlines the results of monitoring of valves and pumps in accordance with the schedule submitted to the division in my letter of October 10, 1986. All four units in the petrochemical area are now monitored on an annual basis under the provisions of 40 CFR 61:243-1, "Allowable Percentage of Valves leaking". There was one pump, 1-28-G-35, that was not repaired within 15 days. The history of that pump is as follows:

Date	Action Taken
6/2/87	Pump check; 10,000+ ppm vapor. Pump shut down. WO number #019637
6/5/87	Repaired; new seal installed
6/8/87	Recheck; 10,000+ ppm vapor. Pump shut down. WO #019873
6/11/87	Repaired; new seal installed.
6/15/87	Recheck; 10,000+ ppm liquid drip. Pump shut down. WO # 40018
6/19/87	Repaired. Recheck. 10,000+ ppm vapor. Pump shut down. WO # 40223
6/23/87	Repaired. New seal installed.
6/24/87	Recheck. 2000 ppm.

a first attempt to repair was made in each case within the 5 days specified by the regulation.

Table E-1. National Emissions Standards for Hazardous Air Pollutants Benzene Equipment Leaks, 401 KAR 57:040

Facility:

Period: April 1, 1987 to September 30, 1987

Process Unit ID:	Aromatic Desulfurization (Process Code 1)					
	Apr-87	May-87	Jun-87	Jul-87	Aug-87	Sep-87
Number of valve leaks detected	*	*	*	*	*	*
Number of valve leaks not repaired	*	*	*	*	*	*
Number of pump leaks detected	1	1	3	0	2	0
Number of pump leaks not repaired	0	0	1	0	0	0
Number of compressor leaks detected	0	0	0	0	0	0
Number of compressor leaks not repaired	0	0	0	0	0	0

Table E-2. Dates of Process Unit Shutdowns

UNIT	APRIL	MAY	JUNE	JULY	AUG	SEP
ADS	0	0	0	0	0	16-18
Sulfolane	0	0	0	0	0	0
Cumene	0	0	0	0	0	0
Reformer	0	3-18	0	0	0	6-18

Table E-3. Additions/Deletions

Process Code

1	ADS
2	Cumene
3	Sulfolane
4	Reformer

ID No.	Process Code	Type	% BZ	Decsription	(V)apor (L)iquid	Method of Compliance	(A)dd (D)elete
1-28-V-2506	1	Valve					D
1-28-V-2505	1	Valve					D
1-35-V-2000	2	Valve	90.00%	3/4" at control station to 35-G-13/14	V	Annual	A
1-35-V-2001	2	Valve	90.00%	3/4" bleeder at FCV24	V	Annual	A
1-35-V-2002	2	Valve	68.50%	1/2" BV between F-5 and F-6	V	Annual	A
1-35-V-2003	2	Valve	68.50%	1/2" BV between F-5 and F-6	V	Annual	A
1-35-V-2004	2	Valve	68.50%	1/2" BV between F-5 and F-6	V	Annual	A
1-35-V-2005	2	Valve	68.50%	1/2" bleeder on F-6 manifold	V	Annual	A
1-35-V-2006	2	Valve	68.50%	1/2" bleeder on F-6 manifold	V	Annual	A
1-35-V-2007	2	Valve	90.00%	1/2" BV at sample cooler for FCV75	V	Annual	A
1-27-V-1306	1	Valve	36.31%	3/4" valve on clay treater	V	Annual	A
1-28-V-2514	1	Valve	98.00%	3" check valve on G-31	V	Annual	A
1-28-V-2515	1	Valve	98.00%	3" check valve on G-32	V	Annual	A
1-28-V-2516	1	Valve	37.00%	6" check valve on G-33	V	Annual	A
1-28-V-2517	1	Valve	37.00%	6" check valve on G-34	V	Annual	A
1-28-V-2518	1	Valve	10.00%	3" check valve on G-42	V	Annual	A
1-28-V-2519	1	Valve	37.00%	3" check valve on 35-G-18	V	Annual	A
1-28-V-2520	1	Valve	37.00%	3" check valve on 35-G-19	V	Annual	A
1-28-V-2521	1	Valve	98.00%	3" check valve on 35-G-38	V	Annual	A

Table E-4. Devices Found Leaking During Quarterly Monitoring Required Under 401 KAR 61:137

Device Number	Date Monitored	Work Order No.	Date of First Attempt	Repair	Recheck Date	Recheck Result
1-35-V-1014	22-Jun-87	Operator repair	22-Jun-87	22-Jun-87	22-Jun-87	200 ppm
1-35-V-212	22-Jun-87	40220	22-Jun-87	26-Jun-87	29-Jun-87	700 ppm
1-35-V-222	22-Jun-87	40221	22-Jun-87	26-Jun-87	29-Jun-87	1000 ppm
1-3-V-204	22-Jun-87	40222	22-Jun-87	26-Jun-87	29-Jun-87	250 ppm
1-28-V-502	23-Jun-87	40256	23-Jun-87	26-Jun-87	29-Jun-87	10,000+
		40454 (7/1/87)	05-Jul-87	05-Jul-87	06-Jul-87	10,000+
				07-Jul-87	07-Jul-87	10,000+
				08-Jul-87	08-Jul-87	1000 ppm

Appendix F
Example Initial Semiannual NSPS Report

P.O. Box 64 ▪ Bucks, Alabama 36512

VIRGINIA CHEMICALS
A Celanese Company

June 21, 1984

Mr. Lyle Bentley
Alabama Department of
Environmental Management
State Capitol
Montgomery, Alabama 36130

Dear Mr. Bentley:

The inspection/maintenance program at the propylamines unit has been implemented. The first inspection was held on June 15. This inspection revealed all sample points in compliance. A total of 164 points were inspected.

Attached is a list of points that will be monitored. The frequency of monitoring are those specified by 40CFR part 60, subpart VV. Pumps will be visually inspected each week and monitored using an organic vapor analyzer (OVA) each month. Valves and fittings will be monitored monthly using the OVA. When a leak is detected, it will be labeled with a weatherproof and readily visible identification tag. The tag will be removed only after the leaking valve has been monitored for two consecutive months with no leaks detected. The tag will be removed from pumps and other equipment (other than valves) after the repairs have been made. A logbook will be maintained to record leaks and date repairs are made or attempted. Also, repair methods used on each leak and a written reason for any delay of repairs over 15 days will also be recorded in the log.

Repairs to each detected leak will be attempted no later than 5 days after detection and a repair made no later than 15 days after detection.

If you have any questions, please call Bob Rankin at 829-6601.

Sincerely,

George E Baker III

George E. Baker, III
Utilities Supervisor

md

c: TCB/JWH/RCR/EHP/MOVault
Richard E. Grusnick, ADEM Air Division

JUN 1984
RECEIVED
ADEM
Air Division

Phone 205-829-6601 ▪ TWX 810-743-7569
HOME OFFICE: 3340 West Norfolk Road, Portsmouth, Virginia 23703 ▪ Phone 804-483-7000 ▪ TWX 710-882-3275 ▪ TELEX 901425

VIRGINIA CHEMICALS INC.
Bucks Plant

Date: _____
Operator: _____

Monthly VOC Monitoring

No. 2 Amines Plant

for _____, 1984

Section A. TA-1343 (No. 2 Plant Reactor)			
Item	Description	OVA Reading	Date Work Order Written
1	1" flange at reactor on product discharge line		
2	3/4" valve on PI-1059		
3	3/4" block valve at PI-1059		
4	3/4" bleed valve at PI-1059		
5	FV-195 and flanges		
6	LV-178 and flanges		

Section B. TA-1345 (No. 2 Plant Gas Separator)			
Item	Description	OVA Reading	Date Work Order Written
1	1" flange, liquid inlet line		
2	1-1/2" flange, vapor inlet		
3	1-1/2" valve on vapor inlet		
4	1-1/2" vent valve on G.S. side		
5	1-1/2" vent valve on reactor side		
6	3/4" bleed valve on vent system		
7	3" flange on vent line		
8	3" flange at reactor		
9	1" flange on TA-1345 to PIC-184		
10	1" isolation valve, PT-184		
11	1/2" bleed valve, PT-184		
12	Flange on line to PSV-1117		
13	Flange on valve to PSV-1117		
14	2" flange on vapor discharge to PV-184		
15	Flanges, FE-195		
16	2" valve, PV-184, north		
17	PV-184		
18	2" valve, PV-184, south		
19	2" valve, bypass		
20	2" vapor valve to No. 1 plant		

25-28(1)-6/84

Section D Continued (TA-1346, Surge Tank)			
Item	Description	OVA Reading	Date Work Order Written
69	1-1/2" spectacle blind on recycle amines header		
70	1-1/2" spectacle blind on crude DPA storage line		
71	1-1/2" check valve on line to NH_3 column		

Section E. TA-915 (Crude DPA Storage Tank)			
Item	Description	OVA Reading	Date Work Order Written
1	Line to TA-915, flange at ground level outside dike		
2	Flange on bottom inlet valve		
3	Bottom inlet valve		
4	Flange on TA-915		
5	PSV device on TA-915		
6			
7			
8			
9			
10			

Section F. TA-1294 & 1295 (Crude DPA Storage Tanks)			
Item	Description	OVA Reading	Date Work Order Written
1	Flange on inlet to TA-1294		
2	Valve on inlet to TA-1294		
3	Flanged nozzle on inlet to TA-1294		
4	PSV on TA-1294		
5	PSV on TA-1295		
6	Seal on PH-2045		
7	Suction valve on pump		
8	Drain valve on pump		
9			
10			
11			
12			
13			

25-28(6)-6/84

Appendix G
Example Semiannual NSPS Report

January 22, 1988

NSPS-VOC LEAK MONITORING REPORT
FOR SECOND HALF 1987

File:

Mr. Eli Bell
Texas Air Control Board
6330 Highway 290 East
Austin, Texas 78723

Dear Mr. Bell:

The purpose of this letter is to fulfill the semiannual reporting requirements of the New Source Performance Standards (NSPS) for Equipment Leaks of Volatile Organic Compounds (VOC) in Petroleum Refineries for 12 process units at the

The attached tables summarize the leak monitoring results and downtime summaries for July through December 1987. The next semiannual report for these units will be submitted on or before July 31, 1988, and will include monitoring results for January through June of this year.

If you need any more information, please contact me.

Sincerely,

JMBl:KAP:tlf

RECEIVED
JAN 27 1988
COMPLIANCE DIVISION

Table G-1. NSPS-VOC Leak Monitoring Results, July-December 1987

Unit	Equipment Type	Total Number	Number of Leaks Detected							Number of Leaks Not Repaired*						
			J	A	S	O	N	D	Total	J	A	S	O	N	D	Total
Alkylation	Pumps	42	2	3	0	0	0	0	5	0	1	0	0	0	0	1
	Compressors	12	0	2	0	0	0	0	2	0	0	0	0	0	0	0
	Valves	4,452	9	31	2	3	8	4	57	0	0	0	0	1	1	2
Total			11	36	2	3	8	4	64	0	1	0	0	1	1	3
CLEU 2	Pumps	22	0	1	0	0	0	0	1	0	0	0	0	0	0	0
	Compressors	0	0	0	0	0	0	0	0	0	0	0	0	0	0	0
	Valves	1,813	0	13	0	4	0	0	17	0	1	0	0	0	0	1
Total			0	14	0	4	0	0	18	0	1	0	0	0	0	1
FXK	Pumps	12	0	0	0	0	0	0	0	0	0	0	0	0	0	0
	Compressors	1	0	0	0	0	0	0	0	0	0	0	0	0	0	0
	Valves	909	0	0	0	0	1	0	1	0	0	0	0	0	0	0
Total			0	0	0	0	1	0	1	0	0	0	0	0	0	0
HU 5	Pumps	4	0	0	0	0	0	0	0	0	0	0	0	0	0	0
	Compressors	1	0	0	0	0	0	0	0	0	0	0	0	0	0	0
	Valves	1,467	11	7	3	2	2	5	30	0	0	0	0	0	1	1
Total			11	7	3	2	2	5	30	0	0	0	0	0	1	1
SHU	Pumps	8	0	0	0	0	0	0	0	0	0	0	0	0	0	0
	Compressors	-	0	0	0	0	0	0	0	0	0	0	0	0	0	0
	Valves	736	3	1	2	7	0	3	16	0	0	0	1	0	2	3
Total			3	1	2	7	0	3	16	0	0	0	1	0	2	3
LHU 1	Pumps	2	0	0	0	0	0	0	0	0	0	0	0	0	0	0
	Compressors	2	0	0	0	0	0	0	0	0	0	0	0	0	0	0
	Valves	793	1	4	4	0	0	2	11	0	0	0	0	0	1	1
Total			1	4	4	0	0	2	11	0	0	0	0	0	1	1

Table G-2. NSPS-VOC Process Units' Downtime Summary, July-December 1987

Unit	Downtime Dates
Alkylation	None
CLEU 2	None
FXK	9/23 - 11/2
HU 5	7/15 - 7/25 8/6 - 8/10 8/17 - 9/3 9/9 - 9/27 10/4 - 10/14 10/25 - 11/20
SHU	10/19 - 11/16
LHU 1	None
PS 7	None
PS 8	None
FCCU 3	None
SO_2 Plant	11/11 - 12/15
GF 1	None
DAU	None

Appendix H
Example Benzene Semiannual NESHAP Report

Stauffer Chemical Company
AGRICULTURAL PRODUCTS DIVISION
P.O. BOX 32
BUCKS, AL 36512

December 28, 1987

Mr. Richard E. Grusnick
Air Division
Department of Environmental Management
1751 Federal Drive
Montgomery, Alabama 36130

Mr. Grusnick:

The biannual report required under the Benzene NESHAP in accordance with 40 CFR 61.247 is hereby submitted for the Stauffer Chemical Company, Cold Creek Plant facility in Bucks, Alabama. This report covers the period of May 30, 1987 thru November 30, 1987.

Please call if you have any questions concerning the material submitted.

Very truly yours,

S. E. LeDoux

SEL:wfa
Attachments

CERTIFIED MAIL
RETURN RECEIPT REQUESTED
P 119 222 974

JAN 1988
RECEIVED
ADEM
AIR DIVISION

Section 61.247 (b) (1) Benzene Service Areas

Areas in Benzene service are:

1) Benzene Storage
2) Benzene Unloading
3) Imidan Plant
4) Mixed Organics Storage and Loading
5) Thiophenol 1500 plant - BSA Unit

Section 61.247 (b) (2) Leaks

I. Benzene Storage, Benzene Unloading, Imidan Plant, Mixed Organics Storage and Loading Areas.

	Valves	Pumps	Compressors
Number of leaks	6	5	0
Number repaired	6	5	0

II. Thiophenol 1500 Plant - BSA Unit

	Valves	Pumps	Compressors
Number of leaks	0	0	0
Number repaired	0	0	0

Section 61.247 (b) (3) Dates of Process Unit Shutdown

I. Benzene Storage, Benzene Unloading, Imidan Plant, Mixed Organics Storage and Loading Areas.

The Imidan plant began production on June 22, 1987 and was running November 30, 1987.

II. Thiophenol 1500 Plant - BSA Unit.

The 1500 plant BSA unit was shutdown due to low production demand on June 27, 1987 and was restarted July 10, 1987.

Section 61.247 (b) (4) Equipment Changes

I. Benzene Storage, Benzene Unloading, Imidan Plant, Mixed Organics and Loading Areas.

1. Equipment Out of Service
None.

2. Valves Out of Service for Equipment Repair.
None.

3. Valves Removed from Service.

Valve #	Equipment #	P&ID #
435	Bz Unloading	Bz Unloading
462	Bz Unloading	Bz Unloading
112	R1605A	042Bz
155	R1607	044Bz
374	R1608	045Bz
450	P1649	049Bz

4. Equipment Added.

5. Valves Added.

Valve #	Equipment	P&ID #
376	P1647	046Bz
421	R1608	045Bz
422	R1608	045Bz
471	Discharge P810D	040ABz
472	SH3	045Bz
473	T1647	046Bz
474	P1647	046Bz
475	T1647	046Bz
476	F1641	046Bz
477	F1641	046Bz
478	F1641	046Bz
479	F1641	046Bz
480	R1607	044Bz
481	T1609A	045Bz
482	R1608	045Bz
483	X1607	044Bz
484	P1636	050Bz
485	P1630	050Bz
486	P1609	045Bz
487	P1608	045Bz
488	P1607	044Bz
489	T810C	040ABz
490	T810C	040ABz
491	T810C	040ABz
492	T1645-X1607	056Bz
493	T1645 Vent	056Bz
494	T1645-X1607	056Bz
495	P1608	045Bz
496	R1608	045Bz
497	R1607	044Bz

Valve #	Equipment	P&ID #
498	R1607	044Bz
499	T1607	044Bz
500	P1636	050Bz
501	X1608	044Bz
502	R1607	044Bz
503	R1605A/B	042Bz
504	R1605A/B	042Bz
505	R1605A/B	042Bz
507	R1605A/B	042Bz
508	R1605B	042Bz
509	R1605B	042Bz
510	R1605B	042Bz

See Appendix A
Equipment List Revised

The Imidan plant will be out of Benzene service from December 1987 to April 1988 while involved in Devrinol production.

Section 61.247 (b) (4) Equipment Changes

II. Thiophenol 1500 Plant - BSA Unit

1. Equipment Out of Service.
   None.

2. Valves Out of Service for Equipment.
   None.

3. Valves Removed From Service.
   None.

4. Equipment Added.
   X1524

5. Valves Added.

Valve #	Equipment #	P&ID#
1500 - 63	P1523	040Bz
1500 - 64	X1524	

See Appendix B
1500 Plant - BSA Unit Equipment List

Appendix I
Example Semiannual NESHAP Report
(illustrating a skip program and a difficult-to-monitor valves program)

Amoco Chemical Company
Chocolate Bayou Plant
Post Office Box 1488
Alvin, Texas 77511

H.J. Janssens
General Manager, Manufacturing - Polymers

March 28, 1988

RECEIVED
APR 4 1988
Technical Support and
Regulation Development

CERTIFIED MAIL NO. P 306 792 289
RETURN RECEIPT REQUESTED

Mr. Robert E. Layton, Jr.
Regional Administrator
U. S. Environmental Protection Agency
Region VI
Allied Bank Tower at Fountain Place
1445 Ross Avenue
Dallas, TX 75202

RECEIVED
APR 4 1988
COMPLIANCE DIVISION

Dear Mr. Layton:

Semiannual NESHAP Report for
Benzene Fugitive Emission Monitoring Program

Enclosed are the summary monthly monitoring results for equipment leak testing for the facilities covered by the NESHAP regulation for benzene for the period of September 1, 1987 through February 29, 1988. The affected units at the Amoco Chemical Company Chocolate Bayou Plant are the No. 1 Olefins Unit, No. 2 Olefins Unit and No. 1 Second Stage Hydrotreater. Also included is a summary report for the OSBL benzene storage area.

Benzene fugitive testing of pumps continues on a weekly/monthly basis. We are scheduled to perform fugitive testing of valves again in October 1988, after having skipped three quarterly leak detection periods as allowed by 40 CFR 61.112(b) and 40 CFR 61.243-2, Alternative Standards for Valves in VHAP Service.

We plan to submit the next semiannual report of monitoring results in September 1988. It will include results for equipment tested for the period ending August 31, 1988.

U. S. Environmental Protection Agency

Should you require additional information about the benzene fugitive monitoring program, please contact our Technical Supervisor, Mr. R. F. Havlice, at (713) 581-3350.

Yours truly,

H. J. Janssens/DWB

H. J. JANSSENS

JBS:mab

Attachments

Ref.: CBT-142

Texas Air Control Board, Austin
Texas Air Control Board, Bellaire
U. S. Environmental Protection Agency, Houston

BENZENE MONITORING
SEMI-ANNUAL SUMMARY REPORT
REPORTING PERIOD: SEPTEMBER 1, 1987 - FEBRUARY 29, 1988

VALVES (All accessible valves checked in October)

AREA	TOTAL CHECKED	TOTAL LEAKING
#1 OLF	754 (Both "A" & "B" Reactors Ck'd)	5
#2 OLF	839 (Both "A" & "B" Reactors Ck'd)	3
SSHT	461	0
OSBL	176	1
TOTAL	2230	9

VALVES (Inaccessibles - Checked in October for Annual Check)

#1 OLF	24 (Difficult to Monitor)	0
#2 OLF	33 (Difficult to Monitor)	0
SSHT	31 (8 Unsafe to Monitor) (23 Difficult to Monitor)	0
OSBL	1	0
TOTAL	89	0

TOTAL VALVES CHECKED	2319	TOTAL VALVES LEAKING	9
TOTAL VALVES NOT CHECKED	0		
TOTAL VALVES IN PROGRAM	2319	% LEAKS	.4%

PUMPS (Each pump checked monthly with Analyzer and weekly by Visual)

#1 OLF	10	5
#2 OLF	12	7
SSHT	8	2
OSBL	4	1
TOTAL	34	15

RV's - Closed Vent System

#1 OLF	14	0
#2 OLF	13	0
SSHT	16	0
OSBL	3	0
TOTAL	46	0

COMPRESSORS - EXEMPT

SEMI-ANNUAL REPORT
PERIOD REPORTING FROM: 9-01-87 TO: 2-29-88

UNIT: #1 OLEFINS - ETHYLENE UNIT

	VALVES	PUMPS
A. TOTAL TESTED 10-87 TO 11-87	616 ACCESSIBLE & INACCESSIBLE	8
B. NUMBER OF BENZENE LEAKS EACH MONTH MONTH - YEAR		
Sept. - 1987	0	2
Oct. - 1987	1	0
Nov. - 1987	1	1
Dec. - 1987	0	0
Jan. - 1988	0	0
Feb. - 1988	0	0
C. NUMBER WHICH WERE NOT REPAIRED WITHIN 15 DAYS	0	0

D. EXPLANATION OF EACH DELAY OF REPAIR

N/A

E. DATES OF UNIT SHUTDOWNS WITHIN 6 MONTHS PERIOD

N/A

F. ANY REVISIONS OF THE NUMBER OF REPORTABLE VALVES, PUMPS, OR COMPRESSORS SINCE THE LAST SEMI-ANNUAL REPORT

32 Valves Added

Appendix J
Example Semiannual NESHAP Report
(closed-vent system; itemized revisions)

DOW CHEMICAL U.S.A.

OC-708
March 4, 1987

TEXAS OPERATIONS
FREEPORT, TEXAS 77541

CERTIFIED MAIL P063117389

Mr. Sabino Gomez
Texas Air Control Board
6330 Highway 290 East
Austin, Texas 78723

Dear Mr. Gomez:

NESHAP - BENZENE EQUIPMENT LEAKS (FUGITIVE EMISSIONS)

Attached are the semi-annual reports required by the above rule for the following plants:

1)	Storage	Stratton Ridge
2)	Aromatics and Dienes	A-3600
3)	Benzene	A-1701
4)	Ethylbenzene A	A-1706
5)	Ethylbenzene B	B-3120, B-3220, B-4200
6)	LHC #6	B-5600
7)	LHC #7	B-7200
8)	Styrene II	B-7100

If you have any questions, please call me at (409) 238-2195.

Very truly yours,

J. H. McIver
Environmental Services

JHM#5.27/aa

Attachments

xc: M. B. Moran
Stratton Ridge

J. W. Ogle
APB

PLANT: STRATTON RIDGE/STORAGE

BENZENE MONITORING
SEMI-ANNUAL REPORT TO EPA

	1986				1987	
MONTH	9	10	11	12	1	2
1. Number of valves for which leaks detected	0	0	0	0	0	0
2. Number of valves for which leaks not repaired*	0	0	0	0	0	0
3. Number of pumps for which leaks detected	0	0	0	0	0	0
4. Number of pumps for which leaks not repaired	0	0	0	0	0	0
5. Number of compressors for which leaks detected	N/A	N/A	N/A	N/A	N/A	N/A
6. Number of compressors for which leaks not repaired	N/A	N/A	N/A	N/A	N/A	N/A

7. Explanation for any delay of repairs:

N/A

8. Dates of planned process unit shutdowns within semi-annual reporting period:

None

9. Revisions to items submitted in initial statement to EPA.

None

10. Performance results of tests completed during the semi-annual reporting period for:

A. Pumps, compressors or valves that have been optionally designated for no detectible leaks (Table V).

N/A

B. Pressure relief devices in gas/vapor service and not discharging to a closed vent system and control device (Table VI).

N/A

C. Closed vent systems (Table XII).

N/A

D. Valves if either of the two optional inspection schedules is being implemented (Table XIII).

N/A

SUBMITTED BY: M.B. Moran DATE: 2-24-87

PLANT SUPERINTENDENT: M.B. Moran DATE: 2-24-87

8/21/86

SEMI-ANNUAL REPORT TO EPA

PLANT A-3600 Block

	1986-1987 MONTH					
	SEPT	OCT	NOV	DEC	JAN	FEB
1. Number of Valves for Which Leaks Detected	0	0	0	0	0	0
2. Number of Valves for Which Leaks Not Repaired*	0	0	0	0	0	0
3. Number of Pumps for Which Leaks Detected	0	0	0	0	0	0
4. Number of Pumps for Which Leaks Not Repaired*	0	0	0	0	0	0
5. Number of Compressors for Which Leaks Detected	N/A					
6. Number of Compressors for Which Leaks Not Repaired*	N/A					

* as per requirements of rule.

7. Explanation for any delay of repairs: None

8. Dates of planned process unit shutdowns within semi-annual reporting period:
None

9. Revisions to items submitted in initial statement to EPA.
Revisions to Table IV attached.

10. Performance results of tests completed during the semi-annual reporting period for:

A. Pumps, compressors or valves that have been optionally designated for no detectible leaks: N/A

B. Pressure relief devices in gas/vapor service and not discharging to a closed vent system and control device (Table VI). N/A

C. Closed vent systems
FS-1, FS-2 These systems were tested 12/87. Background level was 0 ppm. Maximum instrument reading 0.

D. Valves
No scheduled monitoring until July, 1987.

Thomas L. Kubodiang 2/25/87
Submitted By Date

J. W. Smith 2/26/87
Plant Superintendent Date

J. W. Ogle
pm: 8-9-85
REV: 2-20-87

The Dow Chemical Company Texas Operations

Process Identification No. A3600
Equipment in Benzene Service

Equipment I.D.	Equipment Type	% Wt. Benzene 10-25	25-50	50-75	75-100	Fluid Vapor	Fluid Liquid	Method For Compliance
P-12A	Pump	X					X	Equipped with dual mechanical seals.
P-12B	Pump	X					X	Ditto
P-19A	Pump		X				X	Ditto
P-19B	Pump		X				X	Ditto
P-19C	Pump		X				X	Ditto
P-42A	Pump			X[1]			X	Ditto
P-42B	Pump			X[1]			X	Ditto
P-28A	Pump				X		X	Ditto
P-28B	Pump				X		X	Ditto
P-750A	Pump				X		X	Ditto
P-11A	Pump			X			X	Ditto
P-11B	Pump			X			X	Ditto
P-706C	Pump		X				X	Ditto
P-706D	Pump		X				X	Ditto
P-750B	Pump				X		X	[1]Ditto
[3]P-32E	Pump				X		X	Ditto
[3]P-32W	Pump				X		X	Ditto
D-701S	Sample System	X					X	Closed Purge
T-9 BS	Sample System		X				X	Ditto
T-8 OHS-1	Sample System				X		X	Ditto
[1]T-8 OHS-2	Sample System				X		X	Ditto
	619 Valves[3]							[3]Annual leak detection Repair.
FS-1	Flare		Control Device					[3]Infrared detection system.
FS-2	Flare		Control Device					Ditto

Schedule for semi-annual reports: March 4 and September 4 of each year beginning March 4, 1985.

[1] Revised 2/24/87 - General Revision.
[2] Revised 4/86 - Added valves associated wtih D-62/D-711.
[3] Revised 10/24/86 - Added equipment and valves associated with TK-14. Updated flare and valve compliance.

Appendix K
Sample Forms

COMPRESSOR IDENTIFICATION FORM

FACILITY ADDRESS:_____

UNIT NAME:_____ UNIT NUMBER:_____

EQUIPMENT ID#	DESCRIPTION	IN-SERVICE DATE	OUT-OF-SERVICE DATE	PRIMARY MATERIAL	CONCENTRATION	TYPE OF SERVICE*	COMPLIANCE METHOD**	OPERATOR/ COMMENTS

*LL = LIGHT LIQUID, HL = HEAVY LIQUID, GS = GASEOUS SERVICE
**M21 = METHOD 21, NDE = NO DETECTABLE EMISSIONS, DMS = DUAL MECHANICAL SEAL, VS = VACUUM SERVICE

EQUIPMENT MONITORING FORM
COMPRESSORS

UNIT NAME:_____ UNIT NUMBER:_____

EQUIPMENT ID NUMBER:_____ NO DETECTABLE EMISSIONS - YES:_____ NO:_____

DATE	OPERATOR	VISUAL CHECK	AMBIENT READING	MAXIMUM READING	MAXIMUM - AMBIENT (ACTUAL)	COMMENTS

VALVE IDENTIFICATION FORM

FACILITY ADDRESS:_____

UNIT NAME:_____ UNIT NUMBER:_____

EQUIPMENT ID#	DESCRIPTION	IN-SERVICE DATE	OUT-OF-SERVICE DATE	PRIMARY MATERIAL	CONCENTRATION	TYPE OF SERVICE*	COMPLIANCE METHOD**	OPERATOR/ COMMENTS

*LL = LIGHT LIQUID, HL = HEAVY LIQUID, GS = GASEOUS SERVICE
**M21 = METHOD 21, NDE = NO DETECTABLE EMISSIONS, USM = UNSAFE TO MONITOR, DM = DIFFICULT TO MONITOR, VS = VACUUM SERVICE

EQUIPMENT MONITORING FORM
VALVES

UNIT NAME:_____ UNIT NUMBER:_____

EQUIPMENT ID NUMBER:_____ NO DETECTABLE EMISSIONS - YES:_____ NO:_____

DATE	OPERATOR	VISUAL CHECK	AMBIENT READING	MAXIMUM READING	MAXIMUM - AMBIENT (ACTUAL)	COMMENTS

FLANGE IDENTIFICATION FORM

FACILITY ADDRESS: _____

UNIT NAME: _____ UNIT NUMBER: _____

EQUIPMENT ID#	DESCRIPTION	IN-SERVICE DATE	OUT-OF-SERVICE DATE	PRIMARY MATERIAL	CONCENTRATION	TYPE OF SERVICE*	COMPLIANCE METHOD**	OPERATOR/ COMMENTS

*LL = LIGHT LIQUID, HL = HEAVY LIQUID, GS = GASEOUS SERVICE
**M21 = METHOD 21, VS = VACUUM SERVICE

EQUIPMENT MONITORING FORM
FLANGES

UNIT NAME:_____ UNIT NUMBER:_____

EQUIPMENT ID NUMBER:_____

DATE	OPERATOR	VISUAL, AUDIBLE, OR OLFACTORY CHECK	MAXIMUM INSTRUMENT READING	COMMENTS

PRESSURE RELIEF DEVICE IDENTIFICATION FORM

FACILITY ADDRESS:_____

UNIT NAME:_____ UNIT NUMBER:_____

EQUIPMENT ID#	DESCRIPTION	IN-SERVICE DATE	OUT-OF-SERVICE DATE	PRIMARY MATERIAL	CONCENTRATION	TYPE OF SERVICE*	COMPLIANCE METHOD**	OPERATOR/ COMMENTS

*LL = LIGHT LIQUID, HL = HEAVY LIQUID, GS = GASEOUS SERVICE
**NDE = NO DETECTABLE EMISSIONS, M21 = METHOD 21

EQUIPMENT MONITORING FORM
PRESSURE RELIEF DEVICES

UNIT NAME:_____ UNIT NUMBER:_____

EQUIPMENT ID NUMBER:_____ NO DETECTABLE EMISSIONS - YES:_____ NO:_____

DATE	OPERATOR	VISUAL CHECK	AMBIENT READING	MAXIMUM READING	MAXIMUM -AMBIENT (ACTUAL)	COMMENTS

CALIBRATION PRECISION FOR PORTABLE VOC DETECTOR - I.D.#_____

DATE	OPERATOR	REFERENCE COMPOUND	CALIBRATION GAS CONC. (CALGAS)	ZERO AIR	MEASURED CONC. (after 30 sec.)	ABSOLUTE DIFFERENCE |MEASURED - KNOWN|	AVERAGE DIFFERENCE	CALIBRATION* PRECISION

$$^{*}\text{calibration precision} = \frac{\text{average difference}}{\text{calibration concentration}} \times 100$$

INSTRUMENT CALIBRATION FOR PORTABLE VOC DETECTOR - ID#_____

DATE/TIME	OPERATOR	REFERENCE COMPOUND	CALIBRATION GAS CONC.	ZERO AIR ADJUST	CALIBRATION GAS ADJUST	NOTES:

PUMP IDENTIFICATION FORM

FACILITY ADDRESS: _____

UNIT NAME: _____ UNIT NUMBER: _____

EQUIPMENT ID#	DESCRIPTION	IN-SERVICE DATE	OUT-OF-SERVICE DATE	PRIMARY MATERIAL	CONCENTRATION	TYPE OF SERVICE*	COMPLIANCE METHOD**	OPERATOR/ COMMENTS

*LL = LIGHT LIQUID, HL = HEAVY LIQUID, GS = GASEOUS SERVICE
**M21 = METHOD 21, NDE = NO DETECTABLE EMISSIONS, DMS = DUAL MECHANICAL SEAL, VS = VACUUM SERVICE

EQUIPMENT MONITORING FORM
PUMPS

UNIT NAME:_____ UNIT NUMBER:_____

EQUIPMENT ID NUMBER:_____ NO DETECTABLE EMISSIONS - YES:_____ NO:_____

DATE	OPERATOR	VISUAL CHECK	SEAL POT CONDITION	AMBIENT READING	MAXIMUM READING	MAXIMUM AMBIENT (ACTUAL)	COMMENTS

UNSAFE- AND DIFFICULT-TO-MONITOR VALVES

FACILITY:_____

UNIT NAME:_____ DATE:_____

EQUIPMENT I.D.#	EXPLANATION	ALTERNATE SCHEDULE	OPERATOR SIGNATURE

LEAK DETECTION REPORT

FACILTY:_____

ADDRESS:_____

UNIT NAME:_____ UNIT NO:_____

EQUIPMENT ID NO:_____ INSTRUMENT ID#:_____

OPERATOR:_____ DATE LEAK DISCOVERED:_____

DATE LEAK DETECTED:_____ REPAIR DELAYED - YES:_____ NO:_____

SUCCESSFUL REPAIR DATE:_____

DATE OF ATTEMPTED REPAIRS	REPAIRS ATTEMPTED	INSTRUMENT READING

*REASON FOR DELAY:_____

_____

_____

_____

DATE OF NEXT PROCESS SHUTDOWN:_____

OPERATOR SIGNATURE:_____

☆ U.S. GOVERNMENT PRINTING OFFICE: 1994 — 550-001/80364

United States
Environmental Protection Agency
Center for Environmental Research Information
Cincinnati, OH 45268

Official Business
Penalty for Private Use
$300

EPA/625/R-93/005

Please make all necessary changes on the below label, detach or copy, and return to the address in the upper left-hand corner.

If you do not wish to receive these reports CHECK HERE ☐; detach, or copy this cover, and return to the address in the upper left-hand corner.

BULK RATE
POSTAGE & FEES PAID
EPA
PERMIT No. G-35