ENVIRONMENTAL PROTECTION AGENCY

APTI 413: Control of Particulate Matter Emissions

Student Manual

Chapter 9

APTI: 413 CONTROL OF PARTICULATE MATTER EMISSIONS, 5TH EDITION

Student Manual

© C² Technologies, Inc.
11815 Fountain Way • Suite 200
Newport News, VA 23606
Phone 757.591.8900 • Fax 757.595.4169

The preparation of this manual was overseen by the organizations of the Environmental Protection Agency (EPA) and the National Association of Clean Air Agencies (NACAA*), and the revision of materials was coordinated and managed by the Tidewater Operations Center of C² Technologies, Inc., Newport News, Virginia.

Valuable research and feedback was provided by an advisory group of subject matter experts composed of Dr. Jerry W. Crowder, TX; Dr. Tim Keener, OH; Dr. Douglas P. Harrison, LA., and Mr. Tim Smith, Senior Air Quality Specialist, EPA, Office of Air Quality Planning and Standards.

Acknowledgements and thanks are also extended to Rutgers University, especially Francesco Maimone, Co-Director of the Rutgers Air Pollution Training Program, which hosted the pilot of the revised materials, and the additional reference sources that can be found throughout the manuals.

**The National Association of Clean Air Agencies (NACAA) represents air pollution control agencies in 53 states and territories and over 165 major metropolitan areas across the United States.*

State and local air pollution control officials formed NACAA (formerly STAPPA/ALAPCO) over 30 years ago to improve their effectiveness as managers of air quality programs. The associations serve to encourage the exchange of information among air pollution control officials, to enhance communication and cooperation among federal, state, and local regulatory agencies, and to promote good management of our air resources.

Table of Contents

Electrostatic Precipitators 1
Overview 1
9.1 Operating Principles 1
Precipitator Energization 1
Particle Charging and Migration 5
Dust Layer Resistivity 8
Applicability Limitations 12
9.2 Precipitator Systems 13
Dry, Negative Corona Precipitators 14
Wet, Negative Corona Precipitators 24
Wet, Positive Corona Precipitators 29
9.3 Performance Evaluation 29
Collection Efficiency 30
Specific Collection Area 35
Sectionalization 36
Aspect Ratio 39
Gas Superficial Velocity 40
Collector Plate Spacing 40
Summary of Sizing Parameters 41
Discharge Electrodes 41
Rapping Systems 41
Hopper Design 42
Flue Gas Conditioning Systems 43
9.4 Instrumentation 46
Advantages and Disadvantages 47
Review Questions 48
Review Question Answers 51
Review Problems 53
Review Problem Solutions 54
References 56

Chapter 9

Electrostatic Precipitators

This chapter will take approximately 3.25 hours to complete.

OBJECTIVES

Terminal Learning Objective

At the end of this overview chapter, the student will be able to evaluate the performance of highly efficient particle control mechanisms

Enabling Learning Objectives

9.1 Summarize the operating principles of ESPs.

9.2 Identify the components of three different ESPs.

9.3 Use performance evaluation equations to determine ESP efficiency.

Checks on Learning

Problem Examples and End of Chapter Review Questions & Problems

This chapter discusses the operating principles of and the increased use of Electrostatic Precipitators due to their efficiency and reliability.

Overview

Electrostatic precipitators are used in many industries for the high efficiency collection of particulate matter. They were originally developed in the early 1900s for acid mist control. During the 1940s, precipitators began to be used for particulate matter control at coal-fired boilers, cement kilns, and Kraft recovery boilers. The applications of precipitators have steadily increased since the 1940s due to their ability to impart large electrostatic forces for particle separation without imposing gas flow resistance. Electrostatic precipitator efficiency and reliability have improved steadily since the 1970s as a result of research and development programs sponsored by equipment manufacturers, trade associations, and the USEPA.

9.1 Operating Principles

In all types of electrostatic precipitators, there are three basic steps to particulate matter collection:

- ***Step 1*** is the electrical charging and migration of particles toward a vertical collection surface.
- ***Step 2*** involves the gravity settling (or draining in the case of liquids) of the collected material from the vertical collection surfaces.
- ***Step 3*** is the removal of the accumulated solids or liquids from the hopper or sump below the electrically energized zone.

Precipitator Energization

The purpose of the high voltage equipment of an electrostatic precipitator is to cause particle-charging and migration (Step 1). A simplified drawing of the circuitry from the primary control cabinet to the precipitator field is shown in Figure 9-1.

The alternating power supplied to the primary control cabinet is at a constant 480 volts and 60 cycles per second. This electrical power is supplied to the transformer-rectifier (T-R) set when the main switch and the circuit breaker in the primary control cabinet are both on. If an electrical problem is sensed in the power supply or the precipitator field, the circuit breaker automatically opens. This is called *tripping the field*.

In the primary control cabinet, the automatic voltage controller, the silicon controlled rectifiers (SCRs) and the SCR trigger and pulse controller alter the A.C. line voltage and adjust the waveform of the voltage to control electrical conditions on the primary side of the transformer in the T-R set. The result is a primary voltage that can range from zero to more than 400 volts.

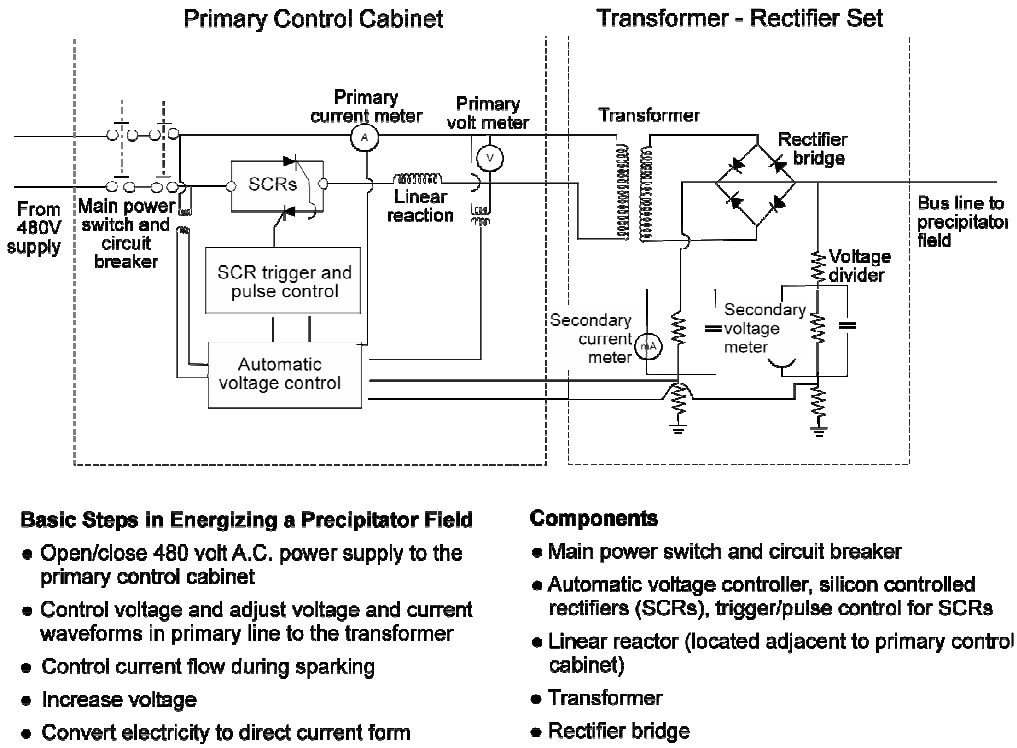

Figure 9-1. Precipitator field energization

The primary alternating power is converted to a secondary pulse-type direct power in the T-R set. The relatively low primary voltage is stepped up to a secondary voltage of more than 50,000 volts. The voltage applied to the discharge electrodes is called the secondary voltage because the electrical line is on the secondary side (high voltage generating side) of the transformer. For convenience, the secondary voltage gauges are usually located on the primary control cabinets.

As the primary voltage applied to the transformer increases, the secondary voltage applied to the discharge electrodes increases. Stable electrical discharges begin to occur when the secondary voltage exceeds the onset voltage, which can be between

15,000 and 25,000 volts depending partially on the sharpness or extent of curvature of the discharge electrode. The relationship between the secondary voltage and the secondary current is shown in Figure 9-2.

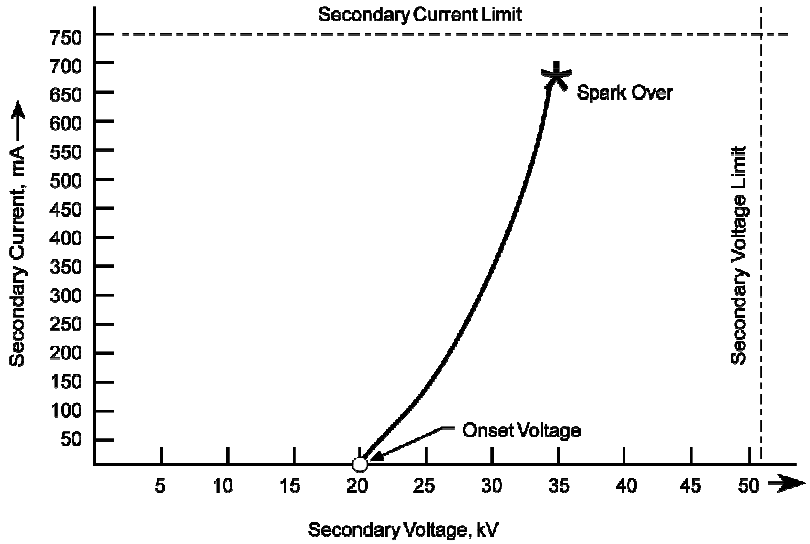

Figure 9-2. Voltage-current curve

The automatic voltage controller in the primary control cabinet is designed to increase the primary voltage applied to the T-R set to the maximum point possible at any given time. One of the following six factors will always limit the maximum secondary voltage:

- Primary voltage limit
- Primary current limit
- Secondary voltage limit
- Secondary current limit
- Spark rate limit
- SCR conduction angle

The upper limit of the primary voltage is set by the 480 volt power line leading to the primary control cabinet. The primary current limit is set by the operator at a level below the current value that could damage the primary control cabinet components. The secondary voltage and current limits are also set at levels necessary to protect the T-R set components.

The spark rate limit is an arbitrary limit selected by the operator to optimize performance. Some electrical sparking is generally indicative of good operation. Excessive sparking can cause premature component failure. Whenever any one of these limits is reached, the automatic voltage controller decreases the applied primary voltage to protect the electrical circuitry. The applied primary voltage moves up the voltage-current curve until one of the limits is reached.

Operating conditions at any given time are determined by one of the six operating limits. The primary voltage, primary current, secondary voltage, secondary current, and spark rate are indicated by gauges mounted on the front of the primary control cabinet. Most of the new installations also have indicator lights to show the operating limit that is presently limiting the secondary voltage. The electrical conditions and the limiting factor vary at any one field over time, and they vary substantially from field-to-field. This information is very useful for evaluating precipitator performance and is, therefore, discussed in more detail later in this chapter.

If there is no electrical sparking in a field, the electrical conditions in the field will remain very stable until dust loadings or other changes affect the electrical conditions. If electrical sparking occurs, there will be short-term variations in these indicated operating conditions. After each spark in a precipitator field, the automatic voltage controller shuts off the primary voltage for a short period of time (milliseconds) to prevent the short-term spark from becoming a sustained, damaging power arc (see Figure 9-3). Once this quench period is over, the voltage is ramped up quickly to a voltage very close to the previous point at which the spark occurred. The voltage is then gradually increased to the point where another spark occurs. Generally, these variations appear as very brief fluctuations in the secondary voltage meter.

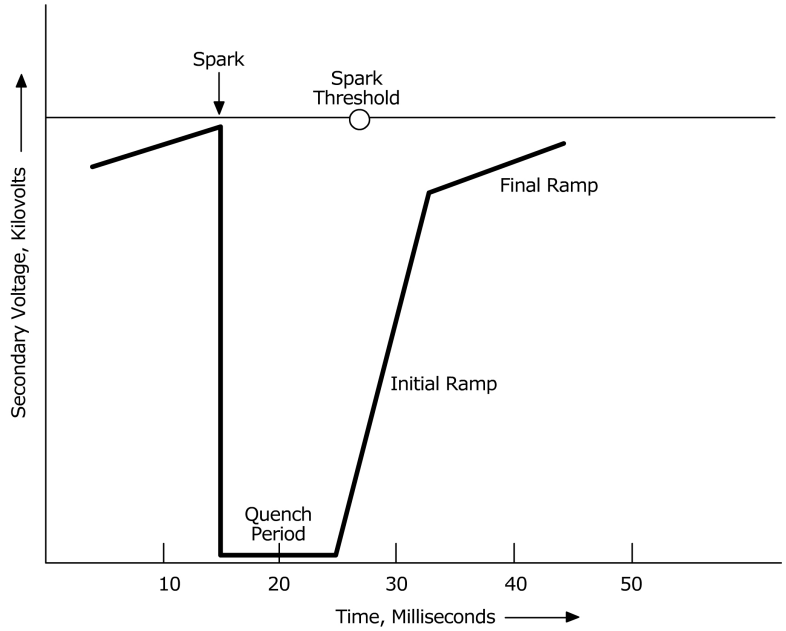

Figure 9-3. Secondary voltage before and after a spark

Protective equipment is included in the primary control cabinet. If a problem is sensed in the power supply of the precipitator field, this protective circuitry trips the power supply and the T-R set off-line. For example, a short circuit across the surface of a high voltage frame support insulator would create very low voltages and high

currents. The under-voltage sensors would detect this condition and shut down the field to prevent damage to the insulator or to the power supply itself.

Particle Charging and Migration

The electrical discharges from the precipitator discharge electrodes are termed *corona discharges* and are needed to electrostatically charge the particles. Within the negative corona discharge, electrons are accelerated by the very strong electrical field and strike and ionize gas molecules (Figure 9-4a). Each collision of a fast-moving electron and a gas molecule generates an additional electron and a positively charged gas ion. The corona discharges are often described as an *electron avalanche* since large numbers of electrons are generated during multiple electron-gas molecule collisions.

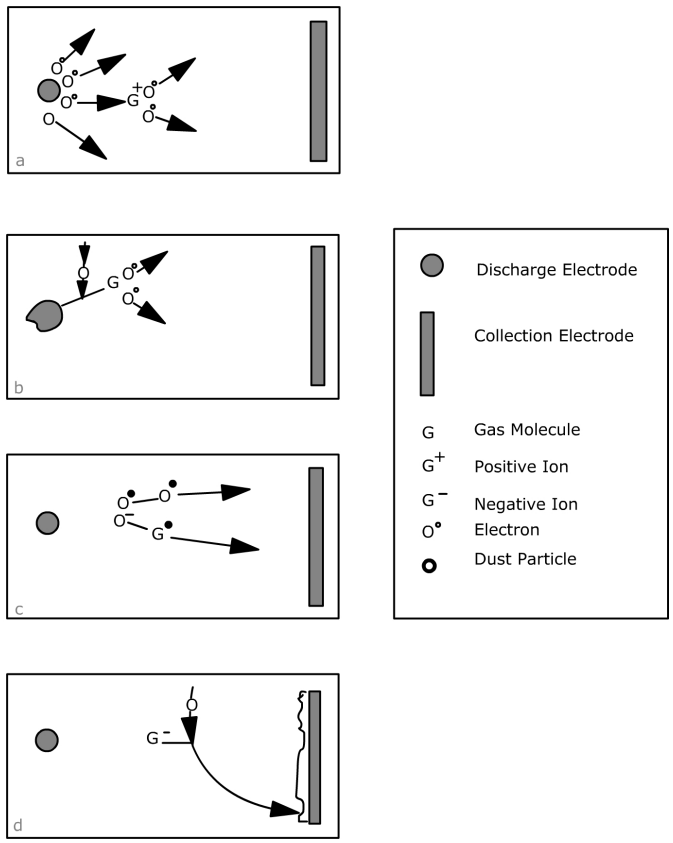

Figure 9-4. Negative corona particle charging

The positive gas ions generated in the ionization process move back toward the discharge electrode. Some of these positive gas ions will deposit on particles inside the corona and charge them positively (Figure 9-4b). These positively charged particles deposit on the negative discharge electrodes, requiring them to be cleaned periodically.

Slightly farther away from the discharge electrode, where the electrical field strength

is lower, electrons released in the corona discharges are captured by gas molecules. These negatively-charged gas ions move rapidly toward the grounded collection plates (Figure 9-4c). Some of these gas ions are captured by particles, charging them negatively (Figure 9-4d). The particles quickly reach a maximum charge called the *saturation charge*. This is the charge at which the electrostatic field created by the captured ions is strong enough to deflect additional gas ions that are approaching the particle.

The magnitude of the saturation charge is dependent on the particle size, as indicated by Equation 9-1. Small particles have a low saturation charge, since the gas ions have only a small surface on which to deposit. The saturation charge increases with surface area or with the square of the particle diameter. Large particles accumulate higher electrical charges on their surface and, therefore, are more strongly affected by the applied electrical field.

(9-1)

$$q = (3\pi\varepsilon_0 E_0) d_p^2$$

Where:

q = charge on particle
ε_0 = permitivity of free space = 8.85 x 10^{-12} farads/m
E_0 = electric field strength = volts/m
d_p = particle diameter

Particle larger than about 1.0 μm diameter, accumulate charged gas ions by locally disrupting the electrical field, causing the gas ions to be momentarily directed to the particle surface rather than the collection plate. This mechanism is termed *contact charging*. Particle less that 0.1 μm diameter do not have sufficient mass to disrupt the electrical field. Instead, they accumulate charges as they randomly diffuse through the gas ions. This mechanism is termed *diffusional or ion charging*.

Once the particles have attached ions, they are influenced by the strong, nonuniform electrical field between the discharge electrode and the grounded collection plate. Accordingly, the charged particles begin to migrate toward the grounded plates at a velocity given by Equation 9-2. At the same time, drag forces, which depend on the particle mass or the cube of the particle diameter, are trying to move the particles straight through the precipitator. As a result, the smaller micrometer-sized particles are deposited near the inlet and progressively larger particles are deposited farther into the precipitator. Usually, particles larger than about 30 μm diameter are removed in a precleaner in order to avoid having an excessively long precipitator. Submicrometer-sized particles charge more slowly but, once charged, move rapidly to the collection plate.

(9-2)

$$\omega = \frac{qE_pC_c}{3\pi d_p\mu}$$

Where:

ω = migration velocity
q = charge on particle
E_p = electric field near collection plate
C_c = Cunningham slip correction factor
μ = gas viscosity
d_p = particle diameter

The combined effect of contact and diffusion charging creates a particle size-collection efficiency relationship similar to Figure 9-5. There are very high collection efficiencies above 1.0 μm due to the increasing effectiveness of contact charging for large particles. Increased diffusion charging causes collection efficiency to increase for particles smaller than 0.1 μm. There is a difficult-to-control range between 0.1 to 1.0 μm due to the size dependent limitations of both of these charging mechanisms. The precipitator is least effective for the particles in this size range.

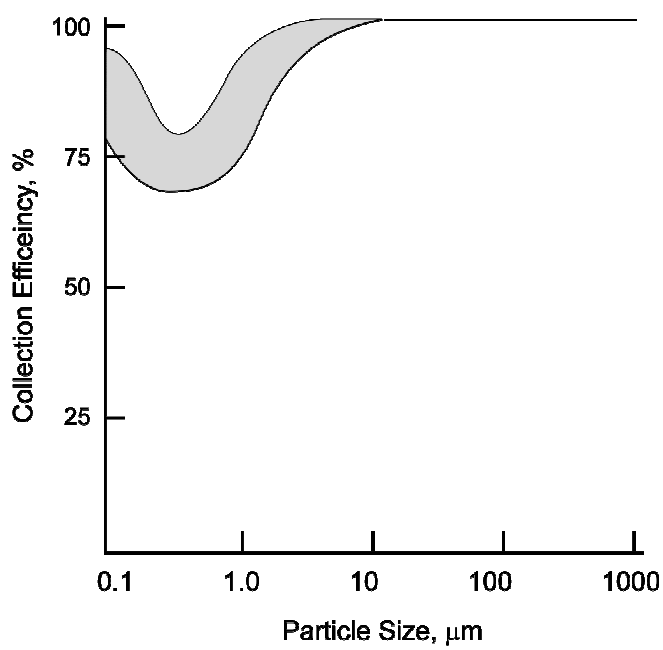

Figure 9-5. Typical particle size efficiency relationship for electrostatic precipitators

The extent of the efficiency limit in the difficult-to-control size range is related to the size of the precipitator, the extent of sectionalization, the

operating conditions, and the physical conditions. Well designed and operated precipitators can have size-efficiency relationships with only a slight efficiency decrease in the difficult-to-control size range. Undersized precipitators or units in poor condition can have a more pronounced efficiency decrease in this size range.

Dust Layer Resistivity

The gas ions arriving on the surfaces of particles and arriving as uncaptured ions must pass through the dust layers on the collection plates. At the metal surface of the collection plate, the voltage is zero, since the plate is electrically grounded. At the outer surface of the dust layer where new particles and ions are arriving, the electrostatic voltage caused by the gas ions can be more than 10,000 volts.

It is this electrostatic voltage difference across the dust layer that holds the dust layer on the vertical surface of the collection plate. The same type of voltage difference is created when a child rubs a balloon on his or her hair and then sticks the balloon on a wall. It does not fall because of the very slight charge difference between the side of the balloon and the wall. Eventually, however, the balloon falls off the wall. The electrons that were initially on the balloon find a path for reaching the wall. As the electrons flow off the balloon, the force holding it to the wall becomes weak.

Essentially the same phenomenon occurs in the dust layers on precipitator collection plates. When the electrical charges from the gas ions can readily move through the dust layer to the plate, the charge difference across the dust layer is relatively low (i.e., several thousand volts). This means that the dust layer can be easily dislodged. When the electrical charges move very slowly through the dust layer, there are a large number of electrical charges on the outer surface, and the voltage difference can be very high (more than 10,000 volts). This means that the dust layer is held very tenaciously.

The ability of the electrical charges to move through the dust layer is measured in terms of the dust layer resistivity. When the resistivity is very low, the electrons are conducted very readily, and there is only a slight charge difference across the dust layer. When the resistivity is very high, the electrons have difficulty moving through the dust layer and create very high forces as they accumulate on the outer surface of the dust layer.

Very high and very low resistivity conditions are harmful to electrostatic precipitator performance. Electrostatic precipitators work best when the dust layer resistivity is in the moderate range: not too high and not too low. This is because of the various ways that the dust layer electrostatic field affects both dust layer rapping and particle charging migration.

During rapping of weakly held low resistivity dust layers, many of the particles are released back into the gas stream as individual particles or small agglomerates that do not settle fast enough to reach one of the hoppers before the gas stream leaves the precipitator. Even large particles of 100 μm diameter do not fall sufficiently fast

to reach the hoppers. Accordingly, it is very important that the particles agglomerate in the dust layer and settle as large clumps or sheets rather than as discrete particles.

If the resistivity is too low and particles are redispersed during rapping, there can be a short term emission spike, called a puff. As the resistivity increases into the moderate range, the voltage drop across the dust layer increases, and the dust cake is dislodged as cohesive sheets or clumps that are large enough to fall rapidly and be collected in the hoppers of the precipitator.

If the voltage drop across the dust layers becomes too high (high resistivity), there can be a number of adverse effects. First, as the dust layer builds up and the electrical charges accumulate on the surface, the voltage difference between the discharge electrode and the dust layer decreases, reducing the electrostatic field strength used to drive the gas ion-carrying particles over to the dust layer. The migration velocities of small particles are especially affected by the reduced field strength. The general impact of high resistivity on the migration velocity is illustrated in Figure 9-6.

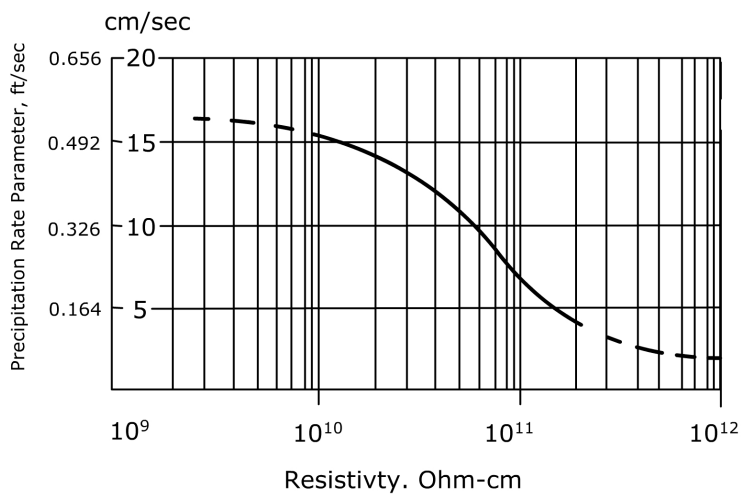

Figure 9-6. Effect of dust layer resistivity on migration velocity

Another adverse impact of high resistivity dust layers is called *back corona*. This occurs when the electrostatic voltage across the dust layer is so great that corona discharges begin to appear in the gas trapped within the dust layer. When the voltage in the dust layer reaches sufficient levels, electrons are accelerated and ionization begins. Positive gas ions formed by the electron collisions stream toward the negatively charged discharge electrode. Along the way, these positive ions neutralize some of the negative charges on the dust layer particles. They also neutralize some of the negative ions on the particles approaching the dust layer and reduce the space charge near the dust layer surface. The net result of back corona is severely impaired particulate matter removal efficiency.

The third and generally most common adverse impact of high resistivity dust layers

is increased electrical sparking. Once the sparking reaches the arbitrarily set spark rate limit, the automatic controllers limit the operating voltages of the field. This causes reduced particle charging effectiveness and reduced particle migration velocities toward the collection plates. High resistivity-related sparking is due primarily to the concentration of electrical field lines in localized portions of the dust layer on the collection plates. Any misalignment problems or protrusions of the collection plate surface make those areas especially vulnerable to sparking. This is why proper alignment of precipitator collection plates and discharge electrodes is so important when the resistivity is high.

There is another adverse characteristic of high resistivity dust layers. Since the dust layers are so strongly held by the electrostatic fields, it is hard to dislodge the dust. As more charged dust continues to arrive, the depth of the dust layer increases, and it becomes even harder for electrons to pass through to the collection plates. There can be some temptation to rap the collection plates frequently and severely to reduce the dust layer quantities. In severe cases, this practice can have very little beneficial impact on the dust layer depths, and it can lead to rapid mechanical failure of the rappers or misalignment of the collection plates. If this practice causes misalignment, the problems caused by high resistivity become even greater.

As previously noted, electrostatic precipitators work best when the dust layer resistivity is in the moderate range. It should resist current flow a little, but not too much. It is helpful to describe the dust layer resistivity based on units of ohm-centimeters. This is simply the ohms of resistance created by each centimeter of dust in the dust layer. High resistivity is generally considered to be equal to or above 5×10^{10} ohm-cm. Low resistivity is generally considered to be equal to or below 5×10^{8} ohm-cm. The region between 5×10^{8} and 5×10^{10} ohm-cm is, therefore, the moderate or preferred range.

There are actually two basic paths that electrons can take in passing through the dust layer to the collection plate surface. They can pass directly through each particle until they reach the metal surface. This is called bulk conduction and occurs only when there are one or more constituents in the particles that can conduct electricity. Conversely, the electrons can pass over the surfaces of various particles until they reach the metal surface. This is called surface conduction and occurs when vapor phase compounds that can conduct electricity adsorb onto the surfaces of the particles. Both paths of current dissipation are illustrated in Figure 9-7.

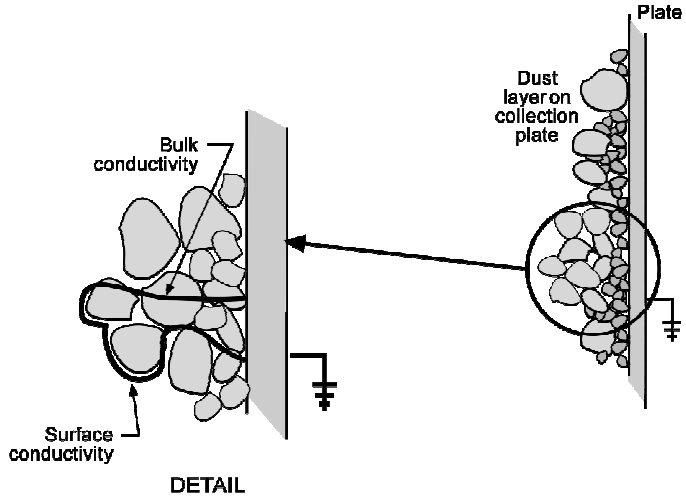

Figure 9-7. Conductivity paths through dust layer

One of the most common electrical conductors responsible for bulk conduction in particles is carbonaceous material. If the concentration of this material is sufficiently high, the electrons can pass from particle to particle to reach the collection plate. Electrical conduction through the inorganic oxides and other compounds that comprise the majority of ash particles from combustion sources and other industrial sources is sufficiently rapid when the temperatures are above 400°F and preferably in the range of 500°F and 700°F. This resistivity-temperature relationship is indicated in Figure 9-8.

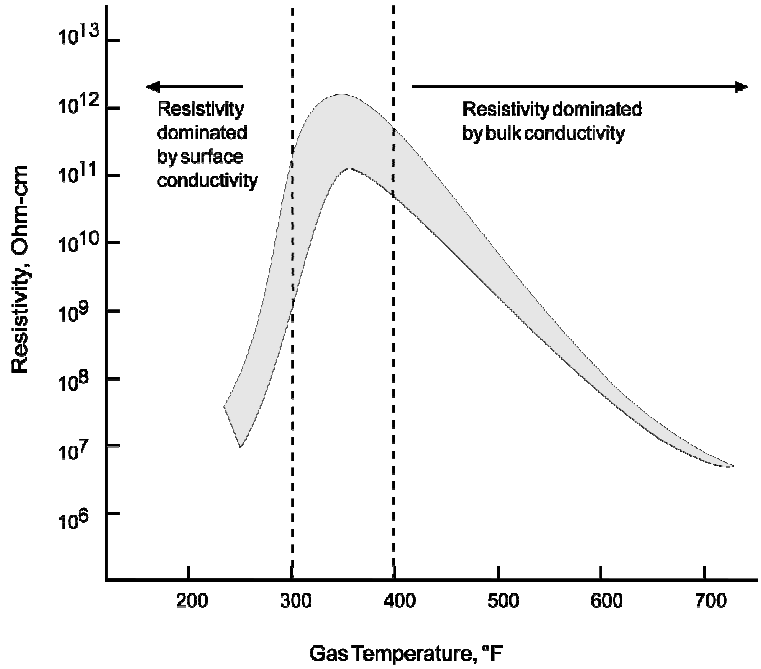

Figure 9-8. Resistivity-temperature relationship

On the low temperature side of the typical resistivity curve, the resistivity can decrease dramatically as the gas temperature drops slightly. This is due to the increased adsorption of electrically conductive vapors present in the gas stream. One of the most common compounds responsible for surface conduction is sulfuric acid. It adsorbs to particle surfaces very readily, even at gas temperatures of 250°F to 350°F. Even vapor phase concentrations of only 5 to 10 ppm are often sufficient to affect the dust layer resistivity. The ability of sulfuric acid to electrically condition the particle surfaces is due, in part, to its hygroscopic tendencies. Each sulfuric acid molecule can be attached to a cluster of water molecules, which can also be electrically conductive.

Many air pollution sources using electrostatic precipitators generate enough sulfuric acid or other particle surface conditioning agents to reduce the dust layer resistivities into the moderate range at operating temperatures of 250°F to 350°F. However, if they generate too much sulfuric acid vapor, or if the gas temperature drops too much, the resistivity can be too low. If, for some reason, enough sulfuric acid is not generated, or the gas temperature is relatively high, the resistivity can be very high.

In sources that do not inherently generate enough vapor phase compounds for surface conditioning, it is necessary to inject the materials into the precipitator inlet. The most common material used to condition precipitators is sulfur trioxide, which quickly forms vapor phase sulfuric acid upon entering the inlet gas stream. Ammonia is also used either alone or in combination with sulfur trioxide. These materials adsorb on the surfaces of the particles as they enter the precipitator and are being collected. Once the particle is in the dust layer, electrons pass through these adsorbed molecules.

The very strong temperature dependence of surface conditioning can create some very non-uniform dust layer resistivities in different portions of the unit. It is common for portions of the precipitator to be 30 to 50°F different from the average temperature indicated by the plant instrumentation. In the hot areas, very little vapor phase material adsorbs, and the resistivity can be relatively high. In the cold areas, too much conductive material can be on the particle surfaces, and the resistivity can be relatively low. Spatial differences of more than three orders of magnitude in dust layer resistivity have been found.

Applicability Limitations

Electrostatic precipitators can provide high efficiency, reliable particulate matter control in a wide variety of industrial applications. However, there are a few conditions that limit their industrial applicability:

- Extremely low fly ash resistivities
- Potential fire and explosion hazards
- Sticky particulate matter
- Ozone formation

In industrial sources that generate highly carbonaceous particulate matter, the fly ash resistivities can be extremely low due to the high bulk conductivity of this material at all temperatures. These resistivities can be below the levels where good performance can be obtained by flue gas conditioning. Severe rapping reentrainment problems can persist during routine operation due to the weak electrical forces bonding the dust layer to the collection plate and the ease of particle dispersion during rapping. Electrostatic precipitators are not an ideal choice for particulate matter control in these applications due to the probable emission problems.

Applications involving the routine or intermittent presence of highly carbanaceous particulate matter or other easily combusted material should be approached with caution. Fires can occur in dust layers on the collection plates or in the accumulated solids in a hopper. These fires can create high temperature areas in the affected part of the unit, which can result in severe warpage and misalignment of the collection plates. Electrostatic precipitators are not appropriate for sources that have potentially explosive concentrations of gases or vapors. The routine electrical sparking in the fields provides numerous opportunities to ignite the explosive materials. For these reasons, electrostatic precipitators are rarely used for sources generating highly combustible or potentially explosive contaminants in the gas streams.

The presence of highly sticky material, such as some oils and compounds like ammonium bisulfate, can present major operating problems in dry, negative corona precipitators. Rapping of the solids from the collection plates must be readily possible. The accumulation of sticky material on the collection plates and other components in the precipitator would soon cause collection plate-to-discharge electrode clearance problems that would adversely affect the electrical conditions in the affected field. For this reason, dry, negative corona precipitators are rarely used on sources that generate high concentrations of sticky particulate matter. Wet, negative corona precipitators and wet, positive corona precipitators can operate very well with moderately sticky material. However, it must be possible to remove the contaminants either by normal drainage or by occasional cleaning sprays.

Dry, negative corona and wet, negative corona precipitators generate very small quantities of ozone due to the characteristics of the corona discharge. Generally, the concentration of ozone is limited by the relatively low oxygen levels in the gas stream being treated. Due to the presence of ozone, these types of electrostatic precipitators are not used for standard air cleaning operations where the oxygen concentrations are at ambient levels, and it is necessary to recirculate the treated air stream to an occupied work area.

9.2 Precipitator Systems

There are three categories of electrostatic precipitators (ESPs). These units serve entirely different industrial applications.

- Dry, negative corona
- Wet, negative corona
- Wet, positive corona

General operating characteristics and components of these three ESPs as well as operating procedures and performance problems, are discussed in this section. The emphasis is on dry, negative corona units since this type is used on the largest systems and these are the most common type of units presently in service.

Dry, negative corona units are used in large industrial facilities such as cement kilns, kraft pulp mills, and coal-fired utility boilers. They are termed dry because the collected solids are removed from the collection plates as a dry material. The term negative corona means that the particles are collected by forcing them to move from a high negatively charged area to an electrically grounded collection plate.

Wet, negative corona units use water on the collection plates to remove the collected solids. This approach eliminates several of the major problems that can affect dry, negative corona units. However, with the use of water in close proximity to high voltage insulators, it adds to the system complexity and it increases the potential problems associated with corrosion. Most wet, negative corona units are used for small-to-moderately-sized industrial sources that produce particulate matter that is sticky or that is too carbonaceous for a dry, negative corona application.

Wet, positive corona units are sometimes termed two-stage precipitators. Particle charging occurs in a pre-ionizer section, and particle collection occurs in a downstream collection plate section. The pre-ionizer operates at a high positive voltage. The wet, positive corona units are used to remove organic compound droplets and mists. The collected material drains from the vertical collection plates. These precipitators are used on small sources.

Dry, Negative Corona Precipitators

A dry, negative corona electrostatic precipitator consists of a large number of parallel gas passages with discharge electrodes mounted in the center and grounded collection surfaces called plates on either side. The discharge electrodes are spaced 4.5 to 6 in. away from each of the collection plates as shown in Figure 9-9. A high negative voltage is applied to the discharge electrodes. The voltage difference between the discharge electrodes and plates creates continuous electrical discharges termed *coronas*.

Figure 9-9. Gas passage between collection plates

Negatively charged gas ions formed in and near the corona discharge impart an electrical charge to the particles and cause them to move toward the electrically grounded collection plates. Mechanical hammers called *rappers* are used to remove a portion of the dust layer accumulating on these plates and the small quantities of dust that also collect on the discharge electrodes. Particle agglomerates and dust layer sheets fall by gravity into the hoppers during rapping.

The dry, negative corona electrostatic precipitator shown in Figure 9-10 is typical of units used on large-scale processes such as coal-fired utility boilers, coal-fired industrial boilers, Kraft pulp mill recovery boilers, cement kilns, and municipal incinerators. They are generally quite large and are often designed for gas flow rates from 100,000 acfm to more than 3,000,000 acfm.

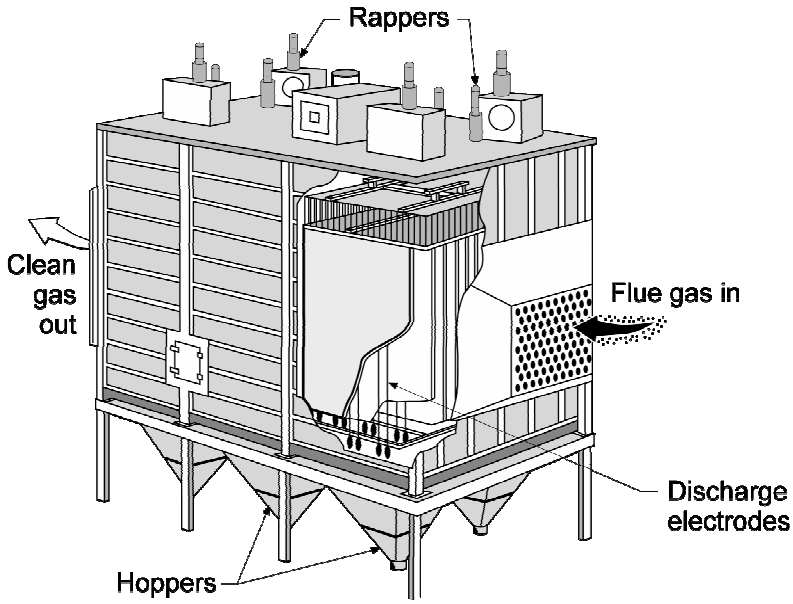

Figure 9-10. Typical dry, negative corona type electrostatic precipitator

The gas stream passing through the duct toward the precipitator is moving too fast

for effective treatment. Deceleration occurs by expanding the gas flow area in the inlet transition section immediately upstream of the precipitator. The gas velocity decreases by a factor of approximately 10 so that the average velocity through the precipitator is usually between 3 to 6 feet per second.

In addition to slowing down the gas stream, the inlet transition is used to distribute the gas flow as uniformly as possible so that there are no significant cross-sectional variations in the gas velocities at the entrance of the precipitator. Proper gas distribution is achieved by proper inlet transition design, by proper inlet ductwork design, by the use of turning vanes in the inlet ductwork, and by a series of gas distribution screens mounted in the inlet transition. Perforated plate gas distribution screens are shown in Figure 9-11.

Figure 9-11. Gas distribution screens at the precipitator inlet

As the gas stream enters the precipitator, it goes through passages formed by the large, parallel collection plates. High voltage discharge electrodes are centered between each of the plates. The side walls of the precipitator have anti-sneakage baffles to prevent untreated gas from passing along the side walls, where it is impossible to mount discharge electrodes. In the precipitators shown in the figures, small diameter wires serve as the discharge electrodes. In other precipitator designs, rigid masts or wires in rigid frames are used. The high voltages applied to the discharge electrodes create a negative corona that ultimately charges most of the particles negatively. The charged particles migrate to the collection plates and build-up as dust layers on the plate surfaces. A small fraction of the particulate matter also accumulates on the discharge electrodes.

The discharge electrodes are divided into fields. These are portions of the precipitator energized by a single transformer-rectifier (T-R) set power supply. Most units have three to four fields in series as shown in Figure 9-12. However, some especially large units have as many as fourteen fields in series. The precipitator can also be divided into separate chambers that are separated by a solid wall. Chambers

may also be designed as separate precipitator shells.

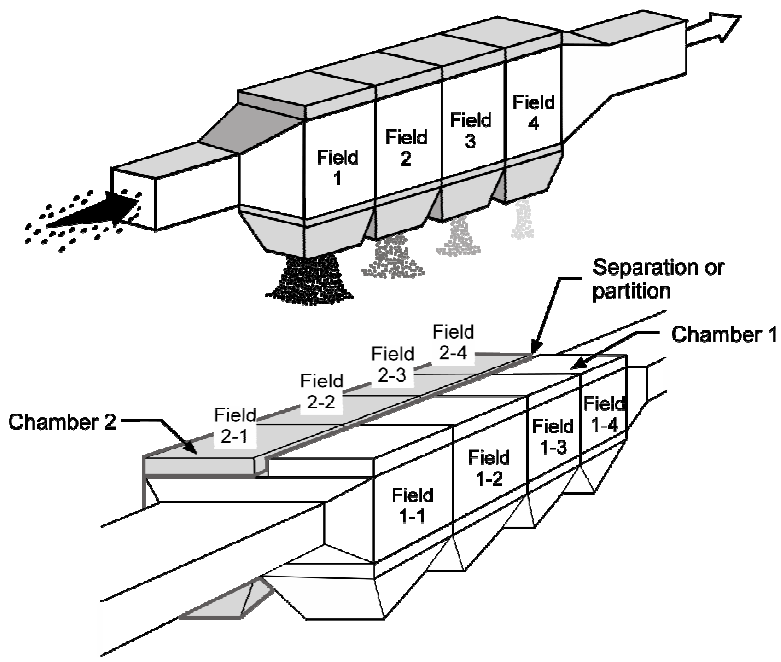

Figure 9-12. Arrangement of fields and chambers

Each of the fields is energized by a T-R set (Figure 9-13). The primary control cabinet circuitry controls the voltage in the alternating current power line applied to one side of the transformer in the T-R set. The high voltage generated in the transformer is converted into direct current in the rectifier and is then sent to the precipitator field.

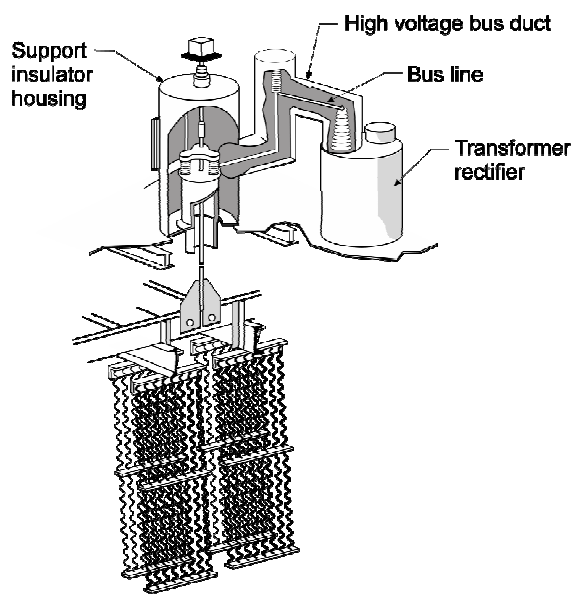

Figure 9-13. T-R set, support insulator, discharge electrode frame, discharge electrodes

The gauges on the control cabinet for each T-R set provide much of the data necessary to evaluate performance. Figure 9-14 illustrates the analog gauges common in many older units. Some new precipitators have digital gauges used alone or in combination with the analog gauges.

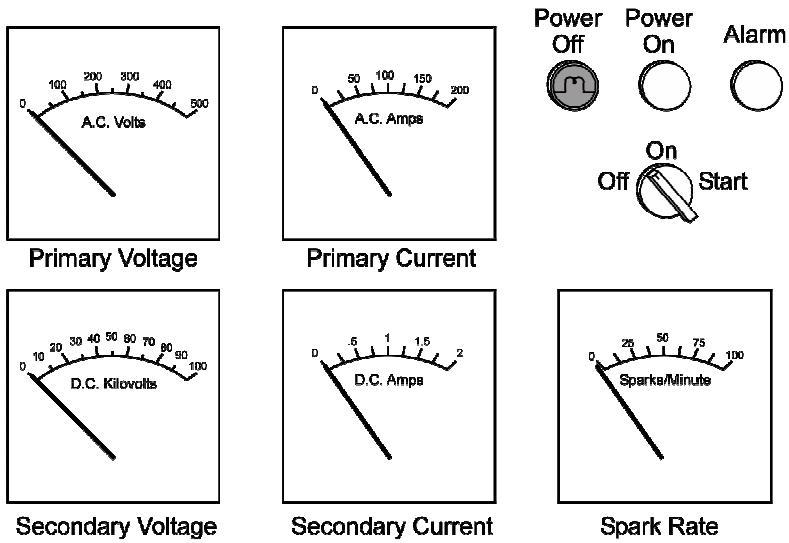

Figure 9-14. Gauges present on the control cabinet for each precipitator field

The distance between the high voltage discharge electrodes and the grounded collection plates affects the electrical charging and migration of the particles. If some portions of the discharge electrodes and collection plates are closer than others, a spark will occur frequently at the close approach point. The automatic voltage controller will respond to this condition by reducing the applied voltage. This reduces the affected field's ability to electrically charge and collect particles. For example, if the designers intended discharge electrode spacing to the collection plates is 4.5 in., it is usually necessary to maintain all the discharge electrodes with an allowable spacing deviation of only ± 0.5 in. In other words, all discharge electrodes in this unit must be between 4 and 5 in. away from all portions of the adjacent collection plates. This is not easy to maintain.

The discharge wires are suspended between the grounded collection plates using insulators called high voltage frame support insulators. There are usually at least two high voltage frame support insulators for each bus section in a field. The location of these insulators is shown in Figure 9-15.

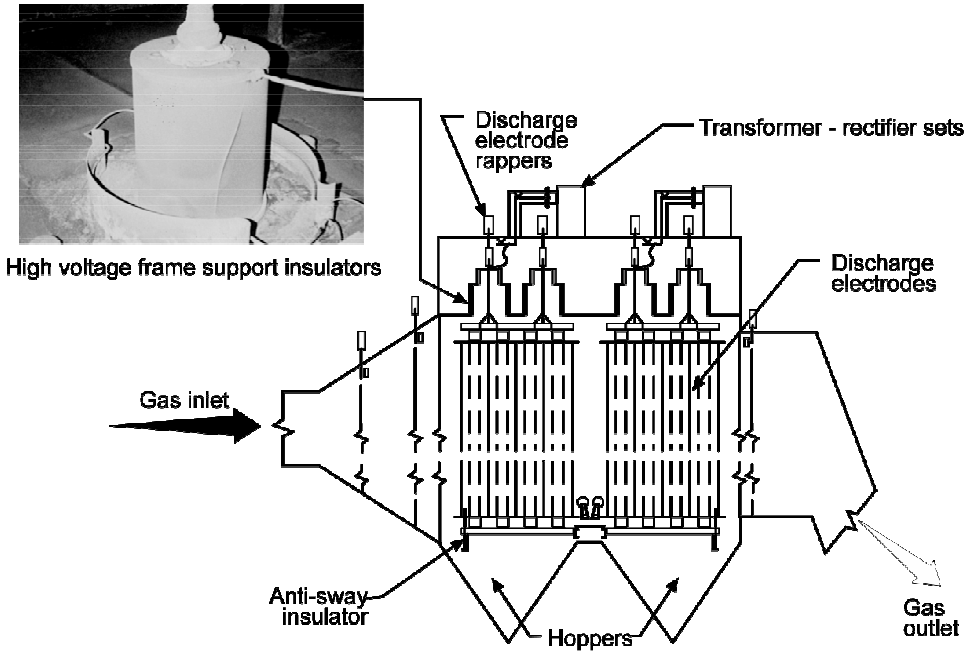

Figure 9-15. High voltage frame support insulators

The accumulation of moisture or dust on the surfaces of support insulators can cause a short circuit. These shorts start as a small current and are identified by reduced voltage in the field and reduced spark rates. As the current flow increases, it heats the surface of the insulator and can cause it to shatter. The development of a short circuit across the insulator surface can also cause the field to automatically shut down. The high voltage frame support insulator must be kept clean at all times to prevent these problems.

There are a variety of design approaches for minimizing the failure of high voltage frame support insulators. Most of these involve minimizing the quantities of moisture and solids that deposit on the inner and outer surfaces. Purge air blowers are used to provide a constant flow of hot air into the insulator penthouse or compartment. This hot air flows through holes in the insulator top cover, keeping the inner surface hot and reducing the particulate matter flowing upward into this area. In some units, unheated purge air is used with electrical resistance heaters around the high voltage frame support insulators to prevent moisture accumulation on the exterior surface. Purge air is usually supplied at a rate of 50 to 100 acfm per insulator. This purge air flow also helps prevent untreated gas from evading the electrically energized zone by passing through the upper regions of the precipitator.

Movement of the wire-type discharge electrodes is minimized by hanging bottle weights on each wire, as shown in Figure 9-16. These provide 25 to 30 pounds of tension on the wire so that it does not move excessively. In other precipitator designs, the discharge electrodes are mounted in rigid frames or are constructed as rigid masts. In these designs, there are usually several anti-sway insulators at the bottom of each high voltage frame to prevent a pendulum action that would reduce clearances between the high voltage electrodes and the grounded plates.

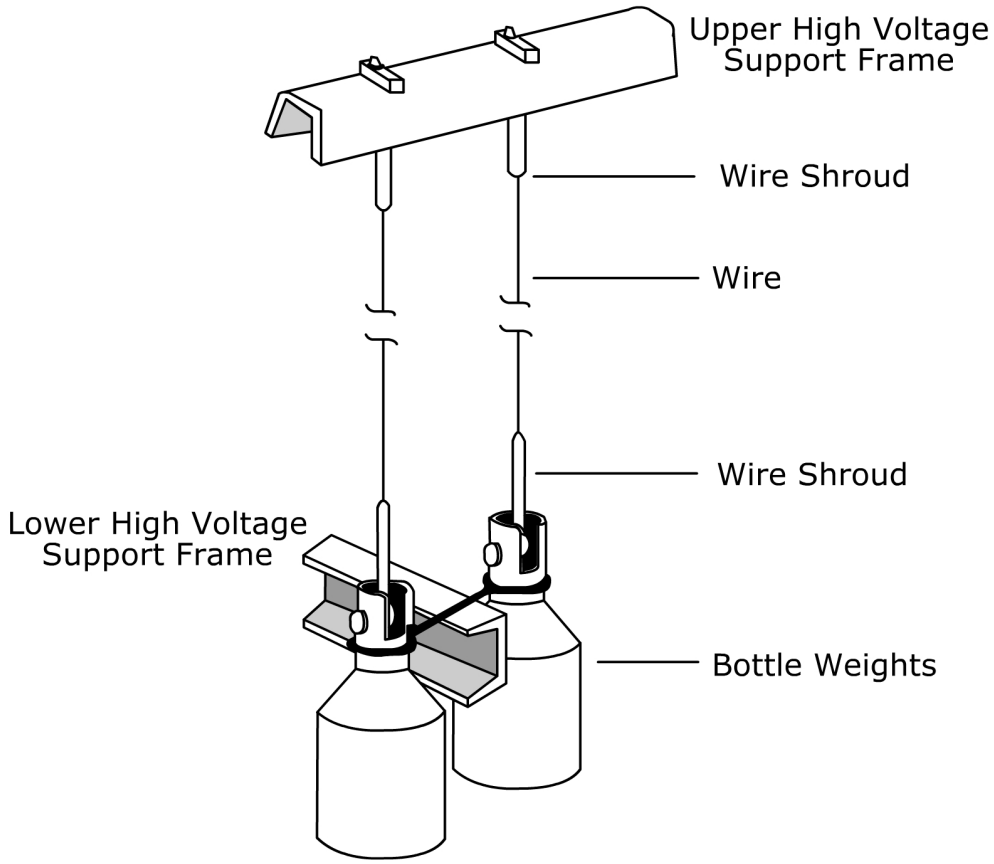

Figure 9-16. Wire-type discharge electrodes

The anti-sway insulators must inherently be located in the hopper area where it is difficult to provide supplemental heat or hot purge air. Accordingly, these insulators are vulnerable to electrical leakage and failure. For example, the anti-sway insulator shown in Figure 9-17 has electrical short-circuiting lines (leakage current) across the surface, which disabled the precipitator field. Short-circuits are normally minimized by using relatively long anti-sway insulators. In some designs, the anti-sway insulators have been eliminated by designing more rigid discharge electrode frame supports.

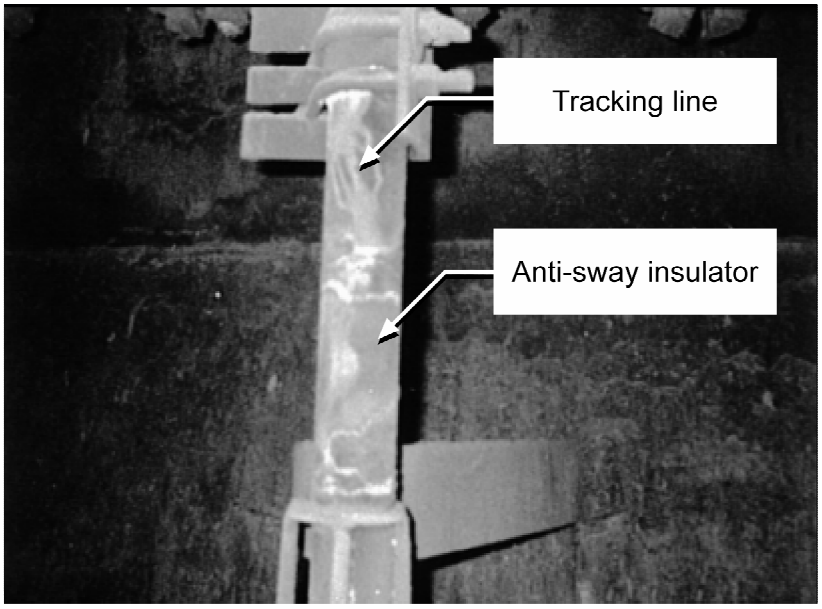

Figure 9-17. Anti-sway insulator with short-circuiting across the surface

The collection of particulate matter is not complete once the particles are removed from the gas stream and accumulate on the collection plates. The solid material must be dislodged from the plates and fall by gravity into the hopper. This important second step often significantly influences the particulate emission rates from the precipitator.

Rapping intensities and frequencies must be adjusted for the approximate resistivity range that exists in the precipitator. If the resistivity is too low, the dust is weakly held and can be easily redispersed into the gas stream by excessive intensity or frequency of rapping. This is often indicated by routinely occurring puffs from the stack. If the resistivity is high, relatively high intensity and frequent rapping is needed. However, the mechanical limits of the rappers, rapper rods, and collection plates must be considered in maintaining this type of rapping practice.

The rapping frequency is not constant throughout the precipitator. The inlet fields should be rapped much more frequently, since they collect large quantities of particulate matter, than the middle and outlet fields. If the rapping is too frequent in the outlet fields, the accumulated dust layer between rapping cycles will be very thin. During rapping, these thin dust layers can be easily redispersed since they are not very cohesive.

Separate groups of rappers are used to clean the collection plates, discharge electrodes, and gas distribution plates. There are two basic types of rappers: (1) roof-mounted rappers and (2) side-mounted rappers. Roof-mounted rapper designs incorporate a large number of individual rappers, each connected to a single high voltage discharge electrode support frame or a section of collection plates. For collection plate rappers, the energy of roof-mounted rappers (Figure 9-18), commonly referred to as MIGIs (magnetic impulse, gravity impact), is transmitted

down a metallic rod. For discharge electrodes, the energy must be transmitted through an insulator rod to prevent carrying high voltage to the rapper and the accessible areas on the roof of the precipitator.

Figure 9-18. Roof-mounted rapper

A side-mounted rapper system is shown in Figure 9-19. Motors are mounted on the exterior of the precipitator and turn shafts that run across the precipitator. A set of hammers is mounted on these rotating shafts in order to rap each individual collection plate and discharge electrode frame.

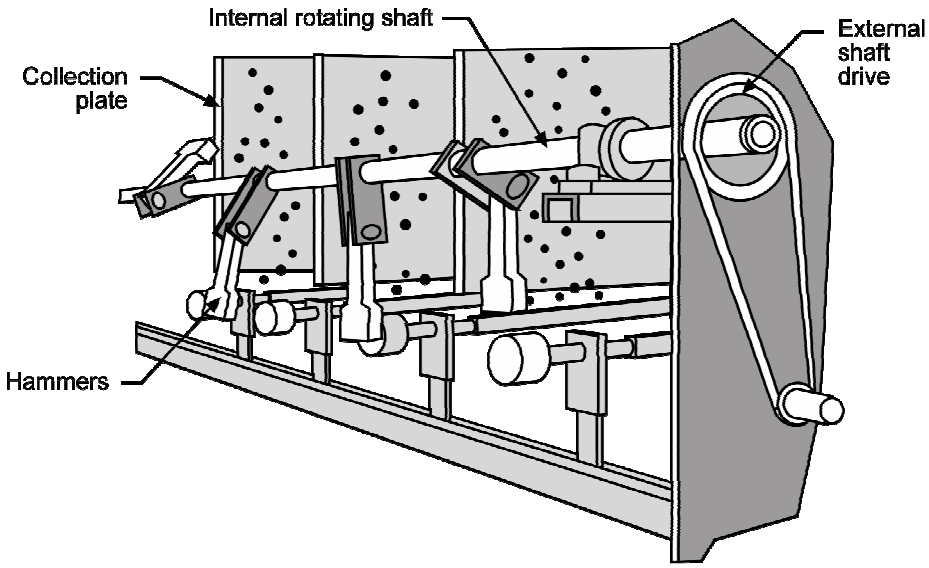

Figure 9-19. Side-mounted rapper

For both types of rapper designs, the frequency and intensity of rapping must be

carefully controlled in order to achieve proper precipitator removal efficiency. The frequency of rapping must take into account that approximately 50-80% of the particulate is removed in each separate field. Accordingly, the inlet fields remove much greater quantities of dust than the outlet fields. For example, assume that the field-by-field efficiencies in a four-field unit are 80%, 70%, 60%, and 50%, respectively, from inlet to outlet. If the inlet particulate loading is 10,000 lb/hr, the quantities of dust removed in each field would be the following:

- Inlet 8,000 lb/hr (80% of inlet quantity)
- Second 1,400 lb/hr (70% of inlet field effluent)
- Third 360 lb/hr (60% of second field effluent)
- Outlet 120 lb/hr (50% of third field effluent)

This simplistic example illustrates the need to rap the inlet field collection plates and discharge electrodes much more frequently than the middle and outlet fields.

The hoppers have very steep slopes to facilitate solids movement into the solids discharge valves leading out of the hoppers. A center division plate is used in each hopper to prevent untreated gas from evading the electrically energized zone by passing through the upper regions of the hopper. This is termed the *anti-sneakage baffle*. The components of a typical hopper are illustrated in Figure 9-20.

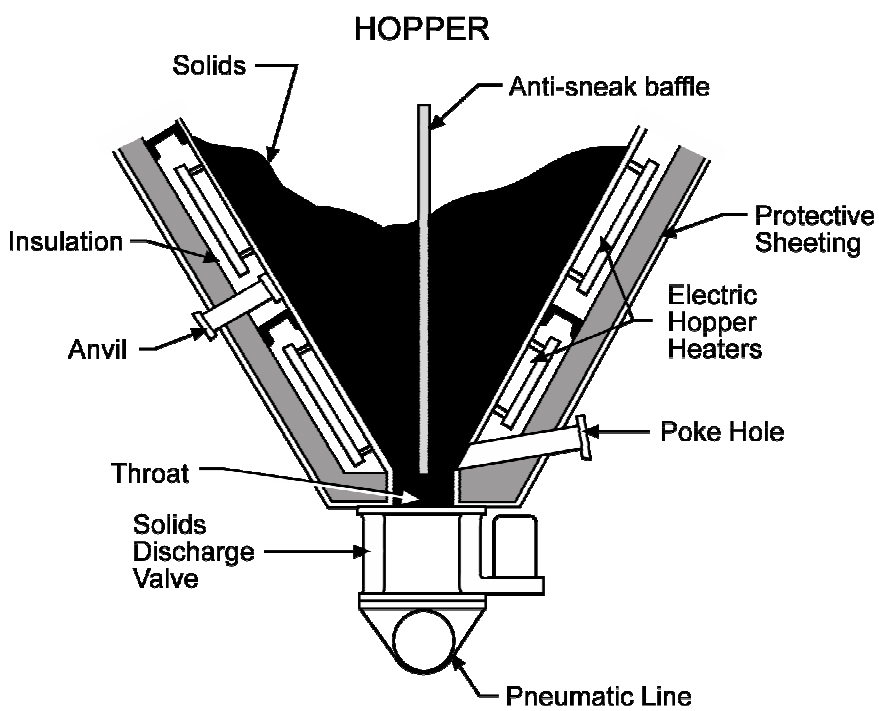

Figure 9-20. Components of a precipitator hopper

Wet, Negative Corona Precipitators

A wet, negative corona precipitator is useful for industrial applications where mists or fogs must be controlled or when solid particulate matter in the gas stream has undesirable electrical or physical properties. Undesirable physical properties include moderate stickiness or a high carbonaceous composition. A washing system, rather than rappers, is used for dust removal. These units, termed either *wet* or *wetted wall*, use power supplies that generate high negative voltages on the small discharge electrodes. The power supplies are essentially identical to those used on dry, negative corona precipitators.

Wet, negative corona ESPs are usually preceded by a quench chamber to ensure that the gas stream is saturated prior to entering the unit. This quench chamber can either be a separate stand-alone vessel as shown in Figure 9-21 or an initial compartment within the wet ESP itself. Due to the presaturation sprays, the operating gas temperatures are usually 130ºF - 170ºF. This substantially reduces the vulnerability of the system to drying of the collection surfaces. Some systems use a liquid recirculation system and liquid additives to maintain the proper pH in the collection plate sprays. Liquid additives can also help minimize the viscosity of the materials draining from the collection plates and can help minimize foaming in some industrial applications.

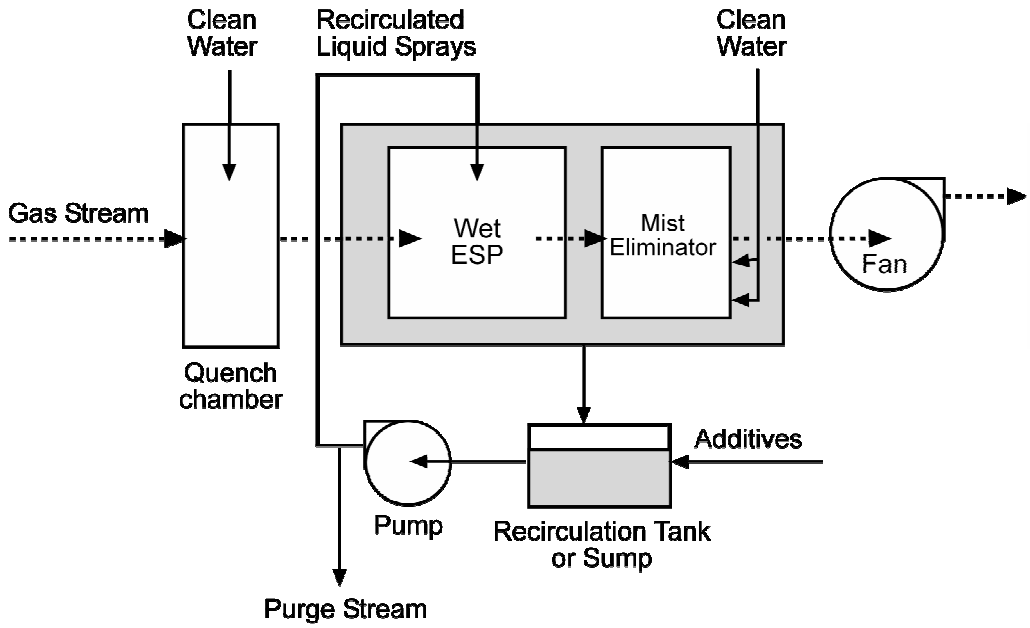

Figure 9-21. Flowchart of a wet, negative corona precipitator

Recirculation liquid must be purged to maintain the solids levels. The rate of liquid purge depends primarily on the rate of collection of solids. Usually, the rate of purge is quite small because the overall recirculation rate of liquid is quite small. A normal liquid-to-gas ratio for a wet, negative corona precipitator is less than 2 gallons per thousand acf.

The gas passages in wet precipitators can be concentric circles, tubes, or parallel rows. Alignment of the negatively charged discharge electrodes and the electrically grounded collection plates is very important to ensure that the field can operate at the necessary voltage. The alignment tolerances are similar to those for dry precipitators.

There are two main design styles for wet, negative corona electrostatic precipitators: (1) vertical flow and (2) horizontal flow. A conventional vertical flow design is illustrated in Figure 9-22. The gas stream enters the presaturator chamber at the top of the unit. The saturated particulate-laden gas stream is distributed to a set of vertical tubes extending to the bottom of the unit. High voltage discharge electrodes are mounted in the center of each tube to generate the negative corona that electrically charges the particles moving down each tube. The charged particles migrate to the wet inner surface of the tube and are collected. Liquid moving down the tube surfaces carries the collected material to the wet ESP sump. Sprays above the tubes are activated on a routine frequency to further clean the tube surface and thereby maintain the required electrical clearances between the high voltage electrode and the electrically grounded tube surface.

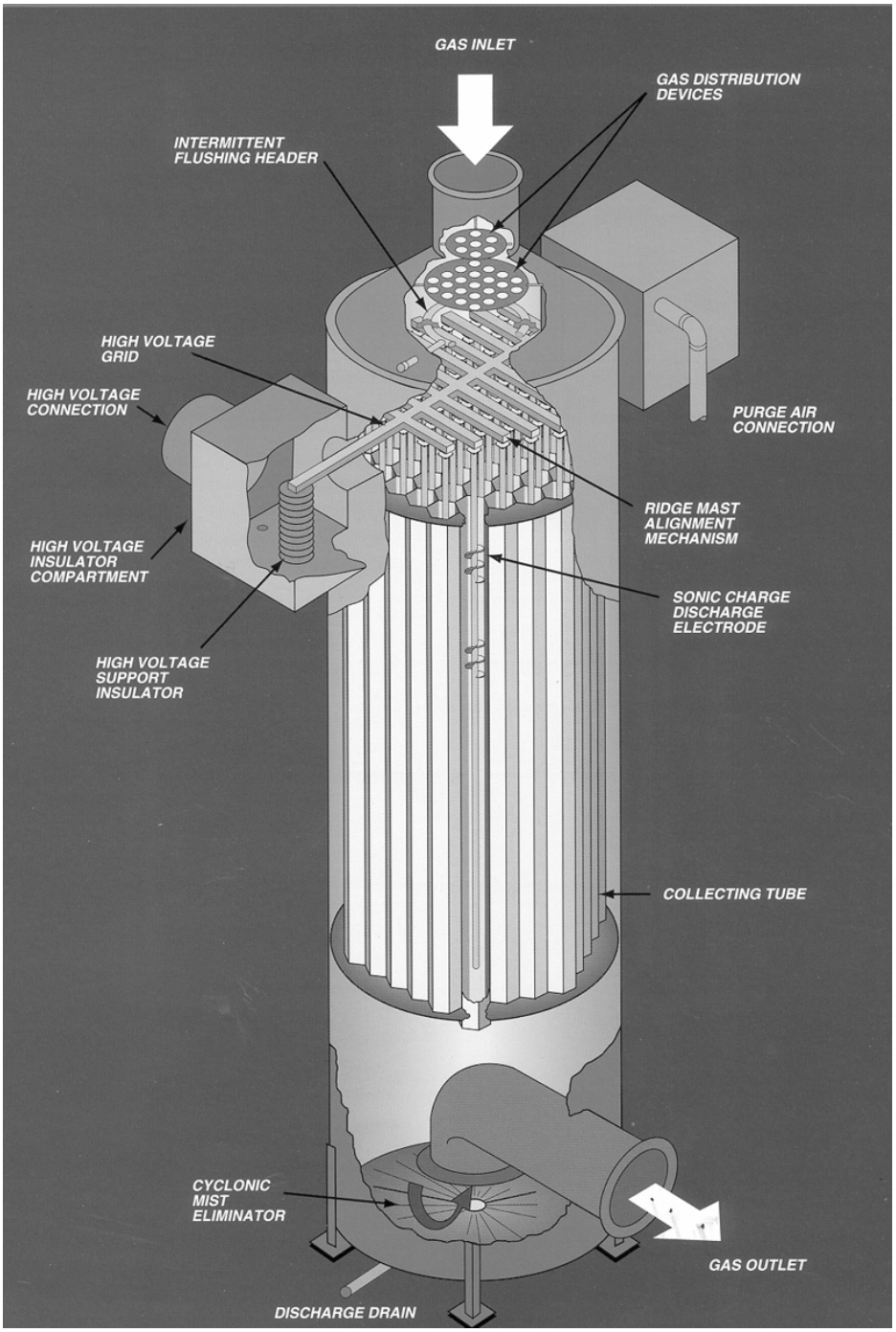

Figure 9-22. Vertical flow wet, negative corona precipitator

Vertical flow wet ESPs have three or more support insulators to suspend the high voltage frame energizing each of the tube discharge wires. These insulators are similar to those used in dry, negative corona units. It is especially important to provide heat and purge air to these insulators due to the relatively cold gas temperatures and the presence of liquid sprays near the tops of the gas passage tubes.

Vertical flow wet, negative corona precipitators use electrical sectionalization differently than dry, negative corona systems. The wet ESPs often have two fields arranged in parallel and only one field in the direction of gas flow. This approach is due, in part, to the difficulty of protecting the high voltage frame support insulators in vertically stacked fields from descending liquid from an upper field.

A horizontal flow wet, negative corona precipitator is shown in Figure 9-23. This unit uses alternating high voltage plates and electrically grounded collection plates to form gas passages. The high voltage plates have discharge electrode points extending from the leading edge of each plate which are energized by a conventional T-R set. The negative corona generated around these discharge points electrically charges particles passing through the unit. The particulate matter is collected on electrically grounded collection plates and drains into the ESP sump. Cleaning of the collection plates is performed by a set of overhead sprays and by a set of sprays on a traversing header on the inlet side of each field (Figure 9-24).

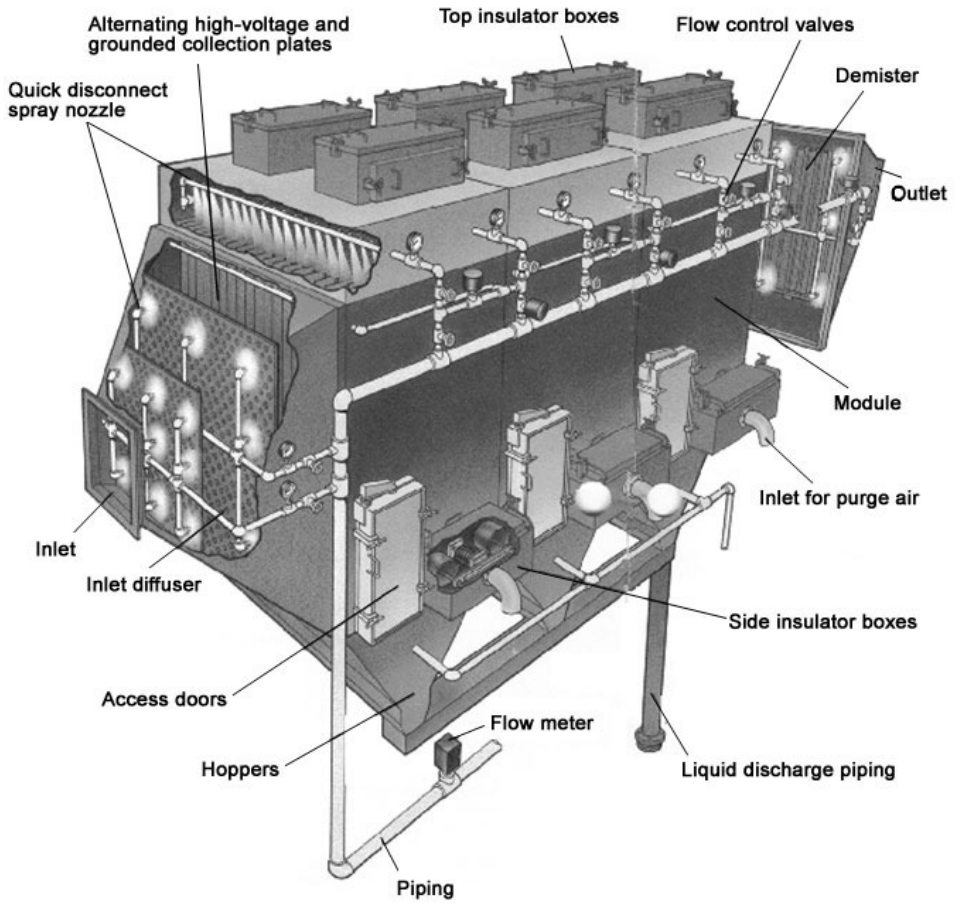

Figure 9-23. Horizontal flow wet, negative corona precipitator

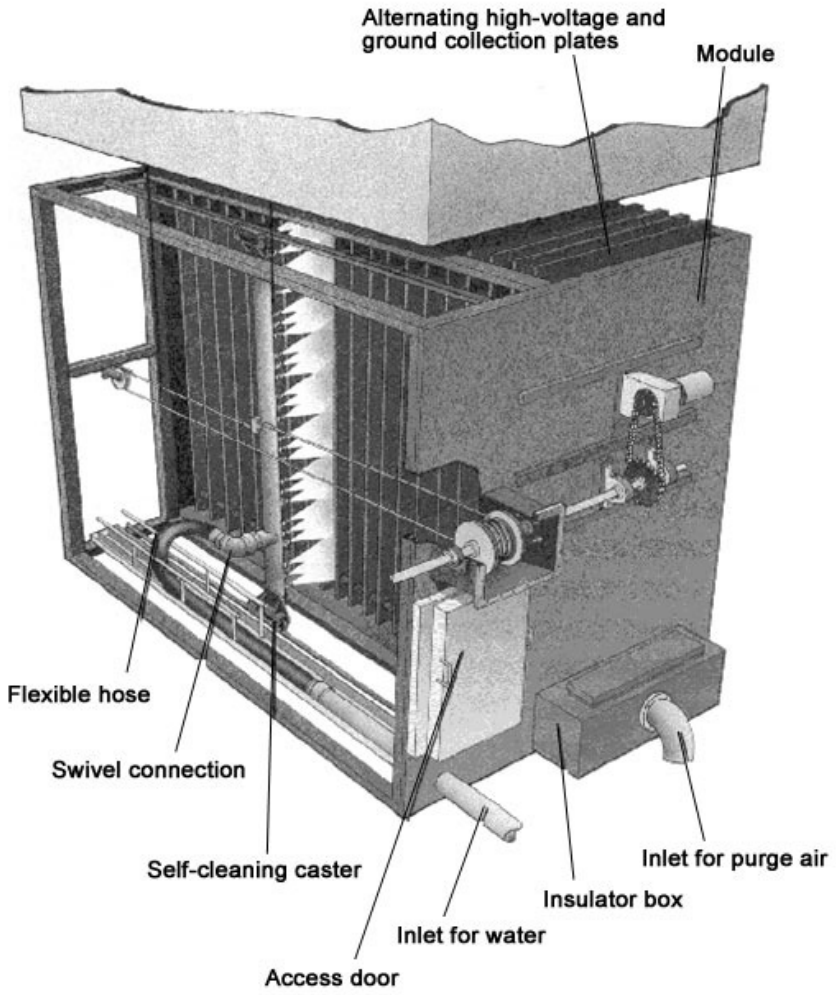

Figure 9-24. View of traversing header sprays

Horizontal flow wet ESPs usually have two or more fields in series. The sectionalization of the fields is similar to the design approach used in dry, negative corona units. The high voltage collection plate support insulators are mounted in insulator boxes on the roof of the unit. As with all wet ESPs, the insulators are heated to minimize the vulnerability to electrical tracking across wet insulator surfaces. Both vertical and horizontal gas flow wet ESPs often use perforated plates to distribute the gas flow entering the units. Sprays are used to occasionally clean these plates.

A set of mist eliminators is often used immediately after a wet, negative corona ESPs. The mist eliminators remove the entrained spray droplets and other solids-containing droplets that would otherwise be emitted to the atmosphere. Mist eliminators have clean water sprays to occasionally clean the droplet-contacting surfaces. Common types of mist eliminators used in wet ESPs include chevrons, tube banks, and baffle plates.

Wet, Positive Corona Precipitators

Wet, positive corona precipitators are used for the collection of organic droplets and mists from relatively small industrial applications such as textile mill tenter frames. As shown in Figure 9-25, the discharge electrodes are separated from the electrically grounded collection plates. The positive voltages applied to the discharge electrodes are in the range of 12 to 15 kilovolts, considerably lower than the negative voltages used in the dry, negative corona or wet, negative corona designs. Electrical charges are applied to particles as they pass through the preionizer section. These particles are then collected on the downstream collection plates. Since wet, positive corona precipitators only collect liquid particles that drain from the plates, they do not require rappers or liquid distributors. The collection plates are designed to allow for easy removal and manual cleaning. The plates are often cleaned on a weekly or monthly basis, depending on the stickiness and viscosity of the collected material.

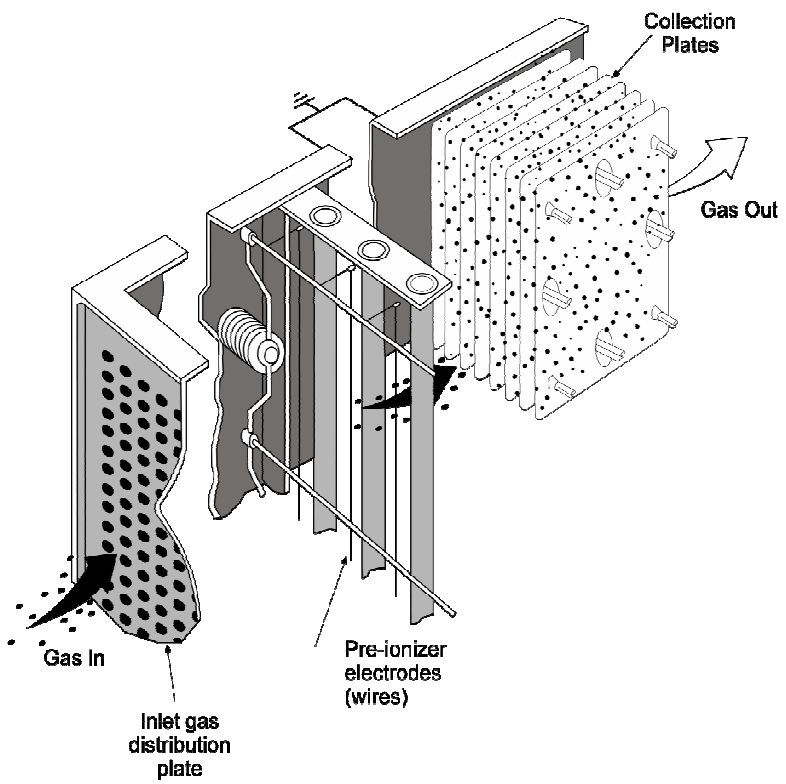

Figure 9-25. Wet, positive corona precipitator

9.3 Performance Evaluation

The size of an electrostatic precipitator is important since there is a general relationship between the size of the unit and the attainable particulate matter removal efficiency. The time for particle charging and migration (Step 1 in electrostatic precipitation) is greater in large units. This is important because the migration velocities of particles with diameters less than 10 μm are relatively low. Large electrostatic precipitators also provide longer gravity settling times for solids

rapped from the collection plates and discharge wires (Step 2 in electrostatic precipitation). However, there are practical limits to precipitator size. Units that are too large are extremely expensive. Other problems associated with oversized units include corrosion caused by excessive convective and conductive gas cooling, corrosion caused by multiple air infiltration sites, and gas maldistribution caused by very low gas velocities at the precipitator inlet. Purchasers and designers of electrostatic precipitators must determine the optimum size that balances the requirements for high efficiency with the need for reasonable cost and reliability.

Relationships and techniques for estimating the collection efficiency of electrostatic precipitators will be presented in this section. In addition, several factors affecting precipitator performance will be discussed. These include:

- Specific collection area
- Sectionalization
- Aspect ratio
- Gas superficial velocity
- Collector plate spacing
- Discharge electrodes
- Rapping systems
- Hopper design
- Flue gas conditioning systems
- Instrumentation

A well designed, properly operated, and well maintained electrostatic precipitator system should achieve overall collection efficiencies in excess of 99 percent.

Collection Efficiency

Perhaps the earliest relationship for predicting the collection efficiency of electrostatic precipitators is the Deutsch-Anderson equation (Equation 9-3). It was first developed empirically by Deutsch and then later derived from basic principles by Anderson. It is a relatively simple and straight-forward relationship and, of course, it doesn't work very well. However, it does serve as the basis for more refined models.

(9-3)

$$\eta = 1 - e^{-\omega \frac{A}{Q}}$$

Where:

η = efficiency (decimal form)
ω = migration velocity (ft/sec)
A = total collection plate area (ft^2)
Q = total gas flow rate (ft^3/sec)
e = base of natural logarithm = 2.718

This equation is based on probability theory and generally applies to particles less than approximately 10 μm in diameter. Particles less than this size have migration velocities of 0.3 to 0.8 ft/sec, which is well below the gas velocities through the passages of 3 to 6 ft/sec. Due to the turbulent nature of the gas flow through the passages, the motion of these particles is dependent primarily on the turbulent mixing of the eddy currents. However, particles close to the collection plate will be captured due to electrostatic forces.

The Matts-Ohnfield equation is a refinement of the Deutsch-Anderson equation. As shown in Equation 9-4, an additional exponent is used to provide a more conservative estimate of removal efficiency. Typical k values range from 0.4 to 0.6.

(9-4)

$$\eta = 1 - e^{-\left[\omega\left(\frac{A}{Q}\right)\right]^k}$$

Where:

k = dimensionless constant

The migration velocity depends on the electrical field strength, the electrical charge on the particle, and other factors described earlier in Equation 9-2. Accordingly, Equation 9-3 and Equation 9-4 are applicable only for particles of a single size. The migration velocity calculated for a submicrometer particle is well below the migration velocity of larger particles, because to the limited number of electrical charges on the small particles.

Migration velocity is also influenced by the dust resistivity. The migration velocities for particles that create low dust layer resistivities are high since these conditions increase the electrical field strength near the collection plate.

Due to variations in particle size distributions and in dust layer resistivities, it is difficult to use the Deutsch-Anderson type equations directly to determine the necessary precipitator size. Furthermore, this approach does not take into account particulate emissions due to rapping reentrainment, gas sneakage around the fields, and other non-ideal operating conditions.

To take these conditions into account, the migration velocity is often used as an empirical factor. Particulate removal data from a variety of similar units installed previously are reviewed to determine the effective migration velocity. This empirically derived migration velocity is then used to calculate the necessary collection plate area of a new installation. The variability of these values is illustrated in Table 9-1.

Table 9-1. Effective Migration Velocities for Various Industries		
Application	**Effective Migration Velocity**	
	ft/sec	**cm/sec**
Utility Coal-Fired Boiler	0.13 - 0.67	4.0 - 20.4
Pulp and Paper Mill	0.21 - 0.31	6.4 - 9.5
Sulfuric Acid Mist	0.19 - 0.25	5.8 - 7.6
Cement (Wet Process)	0.33 - 0.37	10.1 - 11.3
Cement (Dry Process)	0.19 - 0.23	5.8 - 7.0
Gypsum	0.52 - 0.64	15.8 - 19.5
Open-Hearth Furnace	0.16 - 0.19	4.9 - 5.8
Blast Furnace	0.20 - 0.46	6.1 - 14.0

In order to use the Deutsch-Anderson type equations, the collection plate area and average gas velocities must be calculated from the precipitator specifications. The average gas velocity is the total gas flow rate in actual cubic feet per minute divided by the area of the precipitator inlet. This calculation is shown in Equation 9-5.

(9-5)

$$V = \frac{\text{actual gas flow rate}}{\text{cross} - \text{sec tional area}} = \frac{Q\ ft^3/min\left(\frac{min}{60\,sec}\right)}{HW} = \frac{Q\ ft^3/min\left(\frac{min}{60\,sec}\right)}{H\left(\frac{S}{12}\,x\,n\right)}$$

Where:

V = gas velocity (ft/sec)
Q = gas flow rate (ft^3/min) (actual)
H = collection plate height (ft)
S = passage width, inches (normally 9, 10, 12 or 16 in.)
n = number of passages
W = precipitator width (ft)

In calculating the plate area, start by counting the number of gas passages in each field as shown in Figure 9-26. If there are n collection plates across the unit, there will be n-1 passages, since gas does not flow next to the exterior walls of the precipitator.

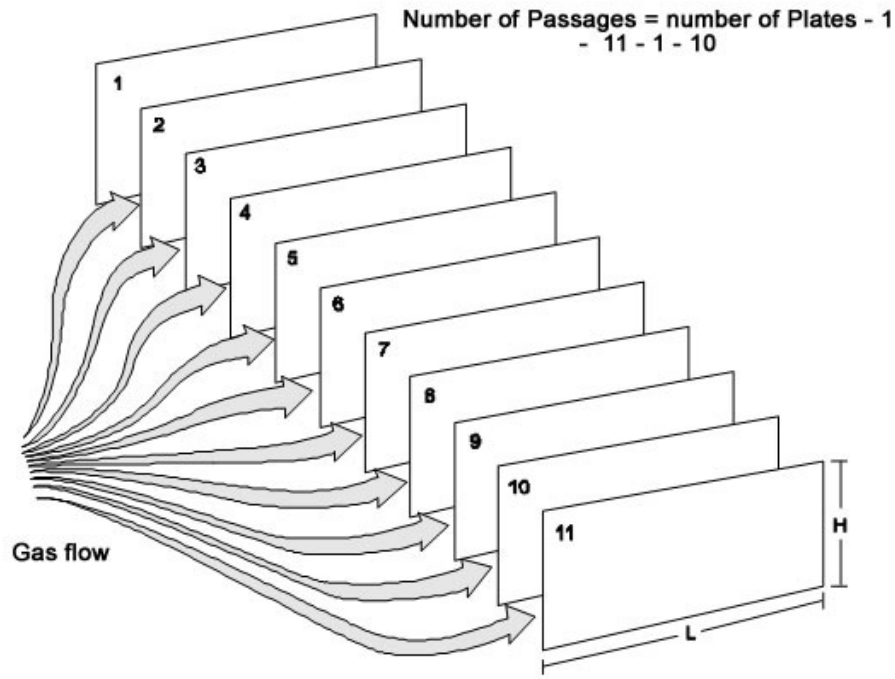

Figure 9-26. Collection plate area calculation

The collection plate area is calculated based on the dimensions of the plate. Since dust collects on both sides of the collection plates in the passages, the collection plate area is calculated using Equation 9-6.

(9-6)

$$A_i = 2\ (n-1)\ (H)\ (L)$$

Where:

A_i	=	collection plate area in field i (ft^2)
n	=	number of collection plates across unit
H	=	height of collection plates (ft)
L	=	length of collection plate in direction of gas flow (ft)

The collection plate area for the unit chamber of the precipitator is calculated simply by summing the areas of each of the fields.

Example 9-1 Calculate the expected particulate efficiency for an electrostatic precipitator serving a utility coal-fired boiler. The gas flow rate is 250,000 ACFM. The total collection plate area is 100,000 ft2. Use an effective migration velocity of 0.20 ft/sec.

Substituting into the Deutsch-Anderson equation:

$$\eta = 1 - e^{-\omega \frac{A}{Q}} = 1 - e^{-\left[\left(0.20 \frac{ft}{sec}\right)\left(\frac{100{,}000\ ft^2}{250{,}000 \frac{ft^3}{min} \times \frac{min}{60\ sec}}\right)\right]} = 0.99177$$

This indicates that the overall efficiency of the precipitator would be 99.18%, if the effective migration velocity were 0.20 feet per second. The estimated efficiencies for assumed effective migration velocities of 0.25 and 0.30 ft/sec would be 99.75% and 99.93% respectively. This illustrates the importance of the assumed effective migration velocity.

In the past, this precipitator sizing approach was sufficient to obtain an initial estimate of the required collection plate area, as long as the equipment manufacturer had an extensive data base to select an appropriate effective migration velocity. These plate area data were then refined and adjusted in designing the unit. A variety of other design factors such as average gas flow rate, number of fields in series, number of chambers, and aspect ratio were considered in determining the specifications of the precipitator.

Sizing calculations based only on Deutsch-Anderson type equations have significant limitations in present-day applications, due primarily to the very stringent particulate control requirements. There can be substantial variations in all of the non-ideal modes of particulate emissions that are lumped together in the effective migration velocity term. Also, there can be significant differences in the energization of the precipitator fields. These site-specific energization and non-ideal emission mode variations can be large enough to cause a new unit to fail to meet the required performance specifications.

A computerized performance model, the EPA/RTI or Lawless model, has been developed. It provides a more fundamentally correct representation of the precipitation process than the Deutsch-Anderson type equations. The EPA/RTI model is based on the localized electrical field strengths and current densities prevailing throughout the precipitator. These data can be input based on actual readings from operating units, or it can be calculated based on electrode spacing and resistivity. These data are used to estimate the combined electrical charging on each particle size range due to field dependent charging and diffusional charging. Particle size dependent migration velocities are then used in a Deutsch-Anderson type equation to estimate particle collection in each field of the precipitator. This model takes into account a number of site-specific factors, including gas flow maldistribution, particle size distribution, and rapping reentrainment.

The use of these performance models requires detailed information concerning the anticipated configuration of the precipitator and the characteristics of the gas stream. Information needed to operate the model is provided in Table 9-2. It is readily

apparent that not all these parameters are needed in each case since some can be calculated from several of the others.

Table 9-2. Data Used in EPA/RTI Computerized Performance Model for Electrostatic Precipitators
ESP Design • Specific collection area • Collection plate area • Collection height and length • Gas velocity • Number of fields in series • Number of discharge electrodes • Type of discharge electrodes • Discharge electrode-to-collection plate spacing
Particulate Matter and Gas Stream Data • Resistivity • Particle size mass median diameter • Particle size distribution standard deviation • Gas flow rate distribution standard deviation • Actual gas flow rate • Gas stream temperature • Gas stream pressure • Gas stream composition

The EPA/RTI model is available through the U.S. EPA Technical Transfer Network (TTN) at http://www.epa.gov/ttncatc1/products.html. Copies of the instruction manual can also be downloaded. This model should be useful for both permit review and precipitator problem evaluation.

Specific Collection Area

The specific collection area (SCA) is defined as the ratio of the collection surface area to the actual gas flow rate passing through the unit. As shown in Equation 9-7, it is usually expressed in terms of square feet per 1,000 acfm of gas flow.

(9-7)

$$SCA = \frac{A}{Q}$$

Where:

SCA = specific collection area ($ft^2/10^3$ acfm)
A = total collection plate area (ft^2)
Q = total gas flow rate (10^3 acfm)

There has been a substantial increase in SCAs from levels of 100 to 200 ft^2 per 1,000 acfm in the 1960s to present-day levels of 300 to 1400 ft^2 per 1,000 acfm. There is no single value of SCA that guarantees adequate performance for all precipitators. Instead, the SCA must be based on unit-specific factors such as the dust layer resistivities and the particle size distribution. Sources that generate particulate matter with high resistivities or small particle sizes generally use a high SCA.

Sectionalization

The performance of an electrostatic precipitator is not solely a function of the quantity of collection plate surface area. It is also dependent on how that surface area is used. There are a variety of design factors that must be taken into account to ensure proper particulate matter removal capability. Proper sectionalization is one of the most important of these design factors.

The electrostatic precipitator is divided into separately energized areas, termed *fields*, arranged in series along the direction of gas flow. Almost all commercial precipitators have at least three fields in series. Some large units used for high resistivity conditions can have has many as fourteen fields in series. The inlet field removes 60% to 75% of the incoming particulate matter, and each subsequent field removes 50% to 80% of the particulate matter penetrating through the preceding field.

Due to these differences in mass collection rates, there can be significantly more dust on the collection plates in the fields on the inlet side of the precipitator than on the outlet side. These thick dust layers suppress current flow. In addition, the electrical charges residing on the particles moving through the space between the discharge electrode and the collection plate produce what is termed a *space charge* that also suppresses current flow in the inlet fields. By dividing the precipitator into separate electrical fields, the effect of the heavy dust layers and the particle space charge can be minimized.

Electrical sparking occurs preferentially on the inlet side of the precipitator. This sparking is due primarily to the accumulation of electrical charge on the outer surface of the dust layer on the collection plate. Sparking near the inlet is also due to the disturbances caused when large quantities of dust are dislodged during each rapping cycle. Rapping in the inlet fields is more frequent than in the outlet fields. As noted earlier, the automatic voltage controller detects the electrical spark as a current surge and shuts off the applied secondary voltage for a few milliseconds. There is also a short period when the secondary voltage is ramping back to its maximum pre-spark levels. During these short time periods, the field strength is not at optimum levels for collection of particulate matter. By sectionalizing the precipitator into separate fields, the field energization problems associated with frequent sparking can be isolated to the first few fields with high spark rates.

On an infrequent basis, an internal mechanical problem in a field can cause an electrical short circuit. Several conditions can cause shorts:

- Mechanical flex failure of a discharge wire
- Chemical corrosion failure of a discharge wire
- Electrical sparking related erosion failure of a discharge wire
- Electrical tracking and failure across a support insulator surface or an anti-sway insulator surface
- Presence of solids bridging between the high voltage frame and the grounded collection plates due to hopper overflow

The field is automatically taken offline by the primary control cabinet to prevent component damage caused by the high current condition. The field can not be reenergized until maintenance personnel enter the unit to retrieve the failed wire, fix the insulators, or clear the hopper solids bridged material. Often the precipitator must operate for a long period of time before this maintenance work can be completed. If the precipitator has a high degree of sectionalization, the amount of the unit out-of-service is relatively small, and the emission rates do not increase substantially. If there are only a few fields in service, the impact of the loss of a field on performance can be quite high.

In addition to standard sectionalization, most electrostatic precipitators also divide individual fields into *bus sections*. A precipitator field has either one or two bus sections. This is the smallest section of the field that can be energized by the T-R set serving the field. The term bus section is derived from the fact that each of these sections has a separate electrical bus (electrical conduit line) from the T-R set. Precipitators often have two bus sections per field so that these two different areas can be separately energized using half-wave rectified power. The advantages and disadvantages of half wave versus full wave rectification are outside the scope of this course.

Example 9-2 One electrostatic precipitator serving a coal-fired boiler has a gas stream of 500,000 ACFM, an inlet particulate mass concentration of 2 grains per ACF, and an SCA of 300 ft2/1000 ACFM. What is the increase in the emission rate if one of the four fields trips offline due to an internal mechanical-electrical problem? Assume the inlet field has an efficiency of 80%, the two middle fields have an efficiency of 70%, and the outlet field has an efficiency of 60%.

A second electrostatic precipitator serving a similar coal-fired boiler also has a gas flow rate of 500,000 ACFM, an inlet particulate mass concentration of 2 grains per ACF, and an SCA of 300 ft^2/1000 ACFM. However, this unit only has three fields in series. What is the increase in the emission rate when a field trips offline if the inlet field has an efficiency of 85%, the middle field has an efficiency of 81%, and the outlet field has an efficiency of 75%?

Solution:
For the first precipitator, the efficiency of four fields in series during routine operation can be estimated as follows.

$$\text{Emissions}_{\text{Routine}} = \frac{2\,\text{grains}}{\text{ACF}}\left(1-\frac{\text{eff}_1}{100}\right)\left(1-\frac{\text{eff}_2}{100}\right)\left(1-\frac{\text{eff}_3}{100}\right)\left(1-\frac{\text{eff}_4}{100}\right)$$

$$\text{Emissions}_{\text{Routine}} = \frac{2\,\text{grains}}{\text{ACF}}\left(1-\frac{80}{100}\right)\left(1-\frac{70}{100}\right)\left(1-\frac{70}{100}\right)\left(1-\frac{60}{100}\right)$$

$$Emissions_{Routine} = \frac{2\,grains}{ACF}(0.20)(0.30)(0.30)(0.40)$$
$$= 0.0072\left(\frac{2\,grains}{ACF}\right) = 0.0144\,grains/ACF$$

When one of the four fields is out of service, the performance of the precipitator can be calculated as follows:

$$\text{Emissions}_{\text{Upset}} = \frac{2\ \text{grains}}{\text{ACF}}\left(1-\frac{\text{eff}_1}{100}\right)\left(1-\frac{\text{eff}_2}{100}\right)\left(1-\frac{\text{eff}_3}{100}\right)\left(1-\frac{\text{eff}_4}{100}\right)$$

$$\text{Emissions}_{\text{Upset}} = \frac{2\,\text{grains}}{\text{ACF}}\left(1-\frac{80}{100}\right)\left(1-\frac{70}{100}\right)\left(1-\frac{70}{100}\right)\left(1-\frac{0}{100}\right)$$

$$Emissions_{Upset} = \frac{2\,grains}{ACF}(0.20)(0.30)(0.30)(1.0)$$
$$= 0.0018\left(\frac{2\,grains}{ACF}\right) = 0.036\,grains/ACF$$

In this case, the emissions increased from 0.014 to 0.036 grains/ACF.

In this general calculation approach, it is assumed that the outlet field, the one with the lowest efficiency, is not available. This is an appropriate calculation approach regardless of which of the four is tripped offline. The roles of the four fields in series will shift as soon as one is lost. For example, the second field becomes the first field if the inlet field trips offline. If one of the middle fields in lost, the gas stream entering the outlet field has high mass loadings and larger sized particulate than during routine operation. Accordingly, the outlet field operates at the efficiency of a middle field.

For the second precipitator, the efficiency during routine operation and during upset conditions after the loss of one of the fields is estimated as follows:

$$\text{Emissions}_{\text{Routine}} = \frac{2\text{grains}}{\text{ACF}}(1-\frac{\text{eff}_1}{100})(1-\frac{\text{eff}_2}{100})(1-\frac{\text{eff}_3}{100})$$

$$\text{Emissions}_{\text{Routine}} = \frac{2\text{grains}}{\text{ACF}}(1-\frac{85}{100})(1-\frac{81}{100})(1-\frac{75}{100})$$

$$\text{Emissions}_{\text{Routine}} = \frac{2\text{grains}}{\text{ACF}}(0.15)(0.19)(0.25) = 0.014\text{grains}/\text{ACF}$$

$$\text{Emissions}_{\text{Upset}} = \frac{2\text{grains}}{\text{ACF}}(1-\frac{85}{100})(1-\frac{81}{100})$$

$$\text{Emissions}_{\text{Upset}} = \frac{2\text{grains}}{\text{ACF}}(0.15)(0.19) = 0.057\text{grains}/\text{ACF}$$

The second precipitator has an emission increase from 0.014 to 0.057 grains/ACF. This is a substantially higher increase than the first precipitator.

It is apparent from the relatively simple calculation that the emission increases resulting from the loss of a field are more severe for units with limited sectionalization, such as the second unit in Example 9-2.

Aspect Ratio

Precipitators with the proper aspect ratios are less sensitive to gravity settling problems. The aspect ratio is defined as the total length of the collection plates (all fields added together) divided by the collection plate height:

(9-8)

$$AR = \frac{\sum_{i=1}^{n} L_i}{h}$$

Where:

AR = aspect ratio (dimensionless)
L_i = length of plates in field i (ft)
H = collection plate height (ft)
n = number of fields in series

The aspect ratio is important because it directly affects the ability of the precipitator to capture solids rapped from the collection plates and falling toward the hoppers. If the aspect ratio is too low, the small particles or small agglomerates of particles are

swept out of the precipitator before they can reach the hopper. This increases rapping reentrainment emissions.

Modern precipitators are designed with aspect ratios of at least 1.0, and the normal range extends to more than 1.5. This means that they are longer than they are high. This provides more time for gravity settling to carry the particulate agglomerates to the hoppers. The average gas velocities in new designs are also slightly lower than pre-1970 units in order to provide more time for settling and reduce rapping reentrainment losses.

Example 9-3 An electrostatic precipitator serving a cement kiln has four fields in series. All of the fields have collection plates that are 24 feet high. The first two fields have collection plate lengths of 9 feet each. The last two fields have collection plate lengths of 6 feet. What is the aspect ratio?

Solution:

$$AR = \frac{\sum_{i=1}^{n} L_i}{h} = \frac{9+9+6+6}{24} = 1.25$$

Gas Superficial Velocity

High gas velocities adversely affect the performance of precipitators, reducing the time available for particle charging and migration. High velocities through the gas passages can also scour particles from the outer surfaces of the dust layers and, thereby, add to reentrainment emissions. Furthermore, high gas velocities reduce the time available for rapped solids to settle by gravity into the hoppers. The average gas velocities in modern precipitators are generally between 3 and 6 ft/sec.

Variations in the gas velocity should be minimized. Localized high velocity zones in the precipitator could significantly increase particulate emissions. The variations should be limited to ± 20% of the average gas velocity. In the past, equipment manufacturers have used 1/32 and 1/16 scale models in order to optimize gas velocities. During the last 10 years, air flow computational fluid dynamic models (often termed CFD models) have also been successfully applied to correct gas flow maldistribution problems.

Collector Plate Spacing

A trend toward increased plate-to-plate spacings started in the 1980s because of the interest in rigid frame type discharge electrode supports. Due to the width of the support tube, the plate spacings were increased from a typical value of 9 in. to the 11 to 12 in. range. This practical consideration was not the only motivation for increased plate spacings. It has been recognized for more than 35 years that improved electrical field strengths could be obtained by increased discharge electrode-to-collection plate spacing. Due, in part, to stringent particulate matter control requirements, many new units will have plate-to-plate spacings in the range of 10 to 20 inches.

Summary of Sizing Parameters

A summary of the typical sizing parameters for electrostatic precipitators is provided in Table 9-3. Some caution is warranted in comparing an existing unit with the ranges shown in this table. The necessary precipitator size and design characteristics vary substantially from site-to-site due to factors such as differences in particulate resistivity distributions, particle size distributions, and process operating rate variations.

Table 9-3.Typical Sizing Parameters Dry Negative Corona ESPs

Sizing Parameter	Common Range
Specific Collection Area, (ft^2/1000 ACFM)	400 - 1000
Number of Fields in Series	3 - 14
Aspect Ratio	1 - 1.5
Gas Velocity, ft/sec	3 - 6
Plate-to-plate spacing, inches[1]	9 - 16

[1]One manufacturer uses 6 in. spacing

Discharge Electrodes

Discharge electrode designs have evolved substantially since the early 1970s, when discharge wire failure was a common problem. The introduction of rigid discharge electrodes and electrode frames has substantially reduced this problem. The use of protective shrouds (shown in Figure 9-16) over the top and bottom 18 inches of the wire-type discharge electrodes has also reduced the frequency of failure. Because of these improvements, present-day failures are usually due to either corrosion or misalignment problems. The failure of discharge wires has become a symptom of other problems rather than a fundamental problem.

Rapping Systems

As noted previously, the rapping frequency is not constant throughout the precipitator. The calculated data shown in Example 9-4 present some assumed field-by-field performance values for a four-field unit. It is apparent that large quantities of particulate are captured in the inlet field, and frequent rapping is needed.

Example 9-4 Estimate the quantities of dust in each field of a four-field electrostatic precipitator having efficiencies of 80%, 75%, 70%, and 65% respectively. Assume a gas flow rate of 250,000 ACFM and a particulate matter loading of 2 grains per actual cubic foot.

Field	Assumed Efficiency	Particulate Entering (lb_m/hr)	Particulate Leaving, (lb_m/hr)	Particulate Collected (lb_m/hr)
1 (inlet)	80	4,286	857	3,429
2 (middle)	75	857	214	643
3 (middle)	70	214	64	150
4 (outlet)	65	64	22	42

Due to the general pattern of particulate removal in a precipitator, the rapping frequency for the inlet field collection plates is usually once every 5 to 15 minutes. This means that the entire set of rappers on this field is activated once during each cycle of 5 to 15 minute duration. The outlet fields collection plates have cycle times that occur as often as one cycle per hour to as infrequently as one cycle every 24 hours. The discharge electrode frame rappers and the gas distribution screen rappers are generally operated on a relatively high frequency, ranging from cycle times of 5 minutes to more than 2 hours.

Many industrial processes served by electrostatic precipitators have process operating rate-related gas flow changes, changes in particulate matter loadings, and changes in particle characteristics. New microprocessor rapping system controllers have several rapping frequency programs. These can be selected manually or automatically based on the process operating conditions. These systems are very effective at tailoring the rapping practices to the prevailing operating conditions. Many of the systems also provide useful diagnostic data concerning the operating status of each of the rappers.

Rapping collection plates generally results in some rapping reentrainment regardless of the resistivity conditions and gas flow rates. Accordingly, collection plate rappers in different portions of the precipitator should not be activated simultaneously. The transient wave of particulate matter can impair the electrical performance of downstream precipitator fields. Most new microprocessor-based rapper controllers include features to preclude simultaneous rapping.

Hopper Design

The removal of solids from the hopper is the important third step in the overall electrostatic precipitation process. Failure to remove solids from the hoppers in a timely manner can cause collection plate misalignment and discharge electrode frame misalignment. Short circuit paths between the high voltage electrodes and the electrically grounded collection plates can result in the formation of large fused clinkers, which usually have to be removed manually. Hopper overflow can also cause deposition on anti-sway insulators.

There are a variety of design features that can reduce vulnerability to hopper

overflow. Hoppers should have steep sides to facilitate solids movement. They should have thermal insulation and an outer protective lagging to prevent heat loss. Hopper heaters are often mounted in the bottom portions of the hopper to provide supplemental heat in the area where convective and conductive cooling is most rapid. Maintaining proper solids temperatures in the hoppers is important because the hot area partially surrounding the deposited solids facilitates solids flow into the small throat at the bottom. If the solids and trapped air cool, the solids flow less readily and may bridge over the throat. One of the most useful techniques for minimizing hopper overflow is to empty the hoppers continuously or as frequently as possible.

Flue Gas Conditioning Systems

Flue gas conditioning (FGC) systems are used exclusively to adjust the resistivity conditions in cold side electrostatic precipitators serving coal-fired boilers. These units operate at gas temperatures between 200°F and 400°F and are vulnerable to both low and high resistivity conditions under some boiler operating conditions. These resistivities can be adjusted back into the moderate range where precipitators work well by injecting either sulfur trioxide or sulfur trioxide and ammonia. Sulfur trioxide reacts to form sulfuric acid vapor and heterogeneously nucleates on the surfaces of particles to adjust the surface conductivity. Ammonia reacts with sulfur trioxide in the flue gas stream to form ammonium sulfate and ammonium bisulfate, which also nucleates on particle surfaces and adjusts the surface conductivity. Sulfur trioxide injection and ammonia injection have been used successfully since the 1970s.

A conventional sulfur trioxide system is shown in Figure 9-27. Elemental sulfur is melted and pumped to the oxidation chamber where sulfur dioxide is formed. The gas stream then enters a vanadium pentoxide catalyst bed where the sulfur dioxide is oxidized further to yield sulfur trioxide. This is transported at a temperature range of 600°F to 700°F to a set of injection nozzles placed upstream of the precipitator inlet. As the sulfur trioxide disperses into the gas stream, it cools and forms vapor phase sulfuric acid as indicated by Reaction 9-1. The sulfuric acid molecules are highly hygroscopic and attract water molecules as indicated in Reaction 9-2.

$$SO_3 + H_2O \rightarrow (H_2SO_4)_{vapor} \qquad \text{Reaction 9-1}$$

$$(H_2SO_4)_{vapor} + xH_2O \rightarrow (H_2SO_4 \bullet xH_2O)_{vapor} \qquad \text{Reaction 9-2}$$

$$(H_2SO_4 \bullet xH_2O)_{vapor} \rightarrow (H_2SO_4 \bullet xH_2O)_{particle\,surface} \qquad \text{Reaction 9-3}$$

The sulfuric acid then adsorbs on the surfaces of the particles. The sulfur trioxide injection rates provide concentrations of 5 to 25 ppm of sulfuric acid in the gas stream passing through the precipitator. The large majority of the sulfuric acid formed due to a flue gas conditioning system is removed in the precipitator.

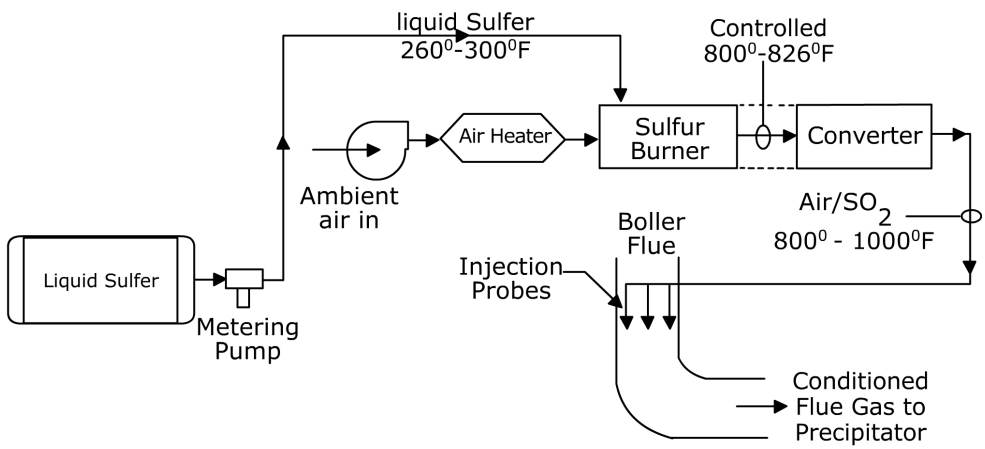

Figure 9-27. Sulfur trioxide conditioning system

Example 9-5 A coal-fired utility boiler generates 5 ppm of sulfuric acid. Diagnostic tests have indicated that 17 ppm of sulfuric acid are needed in the gas stream to maintain the flyash resistivity in the moderate range. Calculate the sulfur required to operate a sulfur trioxide conditioning system for a period of one year. Assume that the boiler has a gas flow rate of 1.0 x 106 ACFM, the gas temperature is 310°F, the boiler operates 82% of the year, and the sulfur trioxide system is needed 85% of the operating time.

Solution:

Sulfur Trioxide System Operating Hours:

$$\text{Operating hours} = 8{,}760\,\text{total hours}\left(\frac{0.82\,\text{boiler hours}}{\text{total hours}}\right)\left(\frac{0.85\,\text{FGC hours}}{\text{boiler hours}}\right)$$

$$= 6{,}106 \text{ FGC hours}$$

Sulfur Trioxide Demand:

$$SO_3 \text{ needed} = 17 \text{ ppm} - 5 \text{ ppm} = 12 \text{ ppm} =$$
$$1.2\times10^{-5} \text{ lb moles } S0_3\text{/lb mole flue gas}$$

Sulfur Trioxide Injection Requirements:

$$SO_3 \; needed =$$
$$\left(1x10^6\,\frac{ft^3}{\min}\right)\left(\frac{528°R}{770°R}\right)\left(\frac{lb-mole}{385.4\,std\;ft^3}\right)\left(60\,\frac{\min}{hr}\right)\left(1.2\,x10^{-5}\,\frac{lb-mole\;SO_3}{lb-mole}\right)$$

$$= 1.28 \text{ lb-moles/hr}$$

Sulfur Required:

$$\text{Sulfur lb moles} = SO_3 \text{ lb moles} = 1.28 \text{ lb moles/hour}$$

$$\text{Sulfur required} = \left(1.28\frac{\text{lb}-\text{moles}}{\text{hr}}\right)\left(6{,}106\frac{\text{hrs}}{\text{year}}\right)\left(32\frac{\text{lbs}}{\text{lb}-\text{mole}}\right)\left(\frac{\text{ton}}{2{,}000\,\text{lbs}}\right)$$

$$= 125 \text{ tons/year}$$

There is a number of sulfur trioxide conditioning systems in commercial service. The unit in Figure 9-28 stores the necessary sulfur in a pelletized form. The sulfur is fed to a melter and then oxidized to form sulfur trioxide. This approach avoids the possible problems and energy costs associated with storing sulfur in a molten form on a continuous basis.

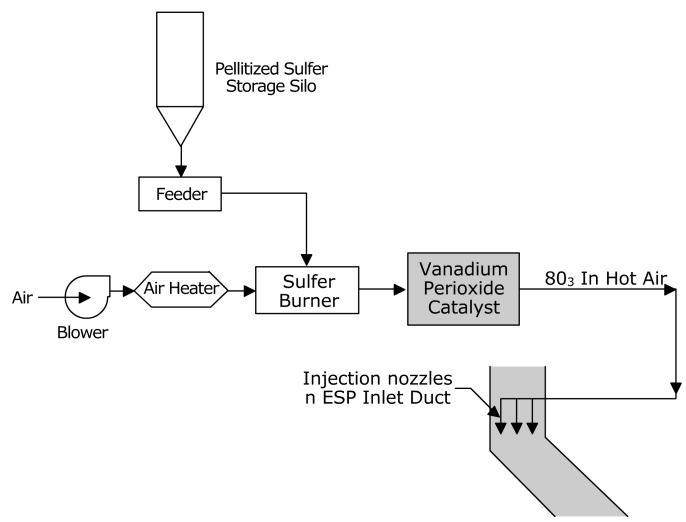

Figure 9-28. Pellitized-type sulfur trioxide conditioning system

Another commercial version of a sulfur trioxide conditioning system uses a set of small catalyst chambers rather than a single large unit for oxidizing sulfur dioxide to sulfur trioxide. The sulfur dioxide gas formed in the sulfur burner is then distributed to a set of pipes leading to the precipitator inlet. Catalyst modules are present on each of the injection lines.

Ammonia FGC systems are very similar to the ammonia feed systems used with Selective Catalytic Reduction (SCR) and Selective Non-Catalytic Reduction (SNCR) for nitrogen oxides control. The ammonia FGC systems can use either anhydrous ammonia or aqueous ammonia as a feedstock. The ammonia is fed from the storage tank at a rate necessary to achieve a preset concentration level, normally 10 to 20 ppm. The ammonia is diluted by a carrier gas, usually air, to a concentration well below its Lower Explosive Limit (LEL) of 15%. Ammonia feed concentrations are

usually less than 3% by volume. The ammonia is then injected into the flue gas streams through a set of pipes mounted at the precipitator inlet. Due to the low ammonia concentrations, the large majority quickly reacts and nucleates on the surfaces of the flyash. Ammonia emissions from the precipitator are usually near negligible levels.

Ammonia conditioning systems can be used as stand-alone units for cold side electrostatic precipitators subject to low resistivity related particulate matter emission problems. In this type of application, the main impact of the ammonia and its gas phase reaction process appears to be improved particle agglomeration of the dust on the collection plate surfaces.

9.4 Instrumentation

New state-of-the art automatic voltage controllers include digital gauges for all of the following electrical parameters of interest in the precipitator field:

- Primary voltage, volts A.C.
- Primary current, amperes A.C.
- Secondary voltage, kilovolts D.C.
- Secondary current, milliamps D.C.
- Spark rate
- SCR Conduction angle, degrees
- Field limiting condition
- Power input, kilowatts

In a few new systems, these parameters are logged and processed in data acquisition systems to provide routine operating records for the unit. In most existing units, the electrical data is logged manually by plant operators.

Information concerning the rappers is usually provided by instrumentation mounted in the rapper control panel. New microprocessor-based control cabinets provide visual information concerning the rapper program in use at the present time, the specific rappers being activated, the presence of any probable rapper activation faults, and the rapping intensities.

Gas stream temperature and oxygen monitors are often used upstream and downstream of electrostatic precipitators to detect the onset of air infiltration problems. Air infiltration can increase gradually due to wear of mechanical parts in the solids discharge system, deterioration of fabric type expansion joints on ductwork, and corrosion of exterior metal parts. The rate of infiltration can increase rapidly because the corrosion caused by acid deposition in cold areas increases gaps and holes where air is entering. One way to identify the presence of significant air infiltration is to install gas stream temperature monitors immediately upstream and downstream of the precipitator. A change in the temperature drop across the unit at a given load condition provides one relatively inexpensive and useful indicator.

Increases from the baseline range of temperature drops would indicate the need to identify and repair the infiltration sites.

Oxygen concentration measurements at the inlet and outlet of the units can also be used to identify increased air infiltration. An increase of more than 0.5% in the oxygen composition of the gas stream is generally associated with significant air infiltration-related problems. For example, a unit with an inlet concentration of 4% oxygen and an outlet concentration of 5% oxygen requires further attention.

Hopper level detectors are often used to provide an early warning of high solids levels in precipitator hoppers. It is important that the detectors be mounted in the proper location. If they are mounted too low in the hoppers, they alarm unnecessarily and may be ignored by the operators. If they are mounted too high in the hoppers, there may be insufficient time for the operator to respond to the alarm and begin removing solids from the hoppers.

Advantages and Disadvantages

Electrostatic Precipitators

- Advantages
  - High Collection Efficiency
  - Dry Collection and Disposal
  - Small Pressure Drop
  - Capable of Handling Large Gas Flow Rates
  - Low Electrical Power Requirements
  - Low Maintenance

Disadvantages

- High Capital Cost
- Particle Resistivity Limitations
- May Require Injection of SO3 or NH3 to Control Resistivity
- Relatively Large Footprint
- Special Precautions for Safe Operating at High Voltage

Review Questions

1. What type of electrostatic precipitator generally uses a presaturator chamber or presaturator water sprays before the unit? Select all that apply.
a. Dry, negative corona
b. Wet, negative corona
c. Wet, positive corona

2. What are the typical superficial gas velocities through a dry, negative corona precipitator?
a. 1 to 5 feet per second
b. 2 to 10 feet per second
c. 3 to 6 feet per second
d. 1 to 5 feet per minute

3. What charge is imposed on a collection plate in a dry, negative corona precipitator or a wet, negative corona precipitator?
a. Negative
b. Positive
c. None, the plates are electrically grounded
d. None of the above

4. What type of electrostatic precipitator is used to collect organic mists? Select all that apply.
a. Dry, negative corona
b. Wet, negative corona
c. Wet, positive corona

5. What type(s) of electrostatic precipitator is least vulnerable to resistivity problems? Select all that apply.
a. Dry, negative corona
b. Wet, negative corona
c. Wet, positive corona

6. What is the purpose of the T-R set in dry, negative corona precipitators?
a. Decrease the voltage and rectify the electricity to alternating current
b. Increase the voltage and rectify the electricity to alternating current
c. Decrease the voltage and rectify the electricity to direct current
d. Increase the voltage and rectify the electricity to direct current

7. What is the normal current in an electrostatic field in good physical condition when the applied secondary voltage is less than the corona onset level?
a. Less than 1 ampere
b. Less than 0.1 ampere

c. Zero
d. None of the above

8. What problems can occur if moisture and/or conductive solids accumulate on the surfaces of the high voltage frame support insulators? Select all that apply.
a. The insulator can overheat and shatter
b. The field served by the insulator could trip offline due to the short circuit
c. The discharge wires in the field could be vulnerable to electrical sparking

9. What fraction of the particulate matter entering the precipitator is usually collected in the inlet field?
a. 10% to 25%
b. 25% to 50%
c. 50% to 80%
d. 80% to 99%

10. What is the purpose of rapping in dry, negative corona precipitators?
a. Remove large clumps of agglomerated solids precipitated in the field
b. Keep the collection plate metal clean by intensely redispersing collected solids that have not fallen into the hopper
c. Keep the high voltage frame support insulators clean
d. Keep the anti-sway insulators clean

11. Under what conditions do dry, negative corona precipitators operate best?
a. Low resistivity
b. Moderate resistivity
c. High resistivity

12. Under what conditions is the dust layer weakly held to the vertical collection plates in a dry, negative corona precipitator?
a. Low resistivity
b. Moderate resistivity
c. High resistivity

13. What factors influence the dust layer resistivity for a precipitator operating at less than 350°F? Select all that apply.
a. Gas temperature
b. Sulfuric acid vapor concentration
c. Water vapor concentration

14. The saturation charge is related to _____.
a. The cube of the particle diameter
b. The square of the particle diameter
c. The first power of the particle diameter
d. The square root of the particle diameter

15. Electrical charge is dissipated through dust layers on the collection plates of dry, negative corona precipitators based on _____. Select all that apply.
a. Surface conduction
b. Bulk conduction
c. Electrical sparking

16. Resistivity usually _____ over the gas temperature range of 500°F to 800°F.
a. Increases
b. Decreases
c. Remains unchanged

17. The secondary voltage is _____.
a. The voltage applied on the discharge electrodes
b. The voltage applied to the primary side of the T-R set
c. The voltage applied by the back-up power supply used in the event that the primary circuit trips offline
d. None of the above

18. What conditions are inappropriate for dry, negative corona electrostatic precipitators? Select all that apply.
a. Explosive gases or vapors
b. Sticky particulate matter
c. Gas streams vented back into occupied areas

19. Typical secondary voltages in a dry, negative corona precipitator and a wet, negative corona precipitators are in the range of _____.
a. 5,000 to 10,000 volts
b. 10,000 to 20,000 volts
c. 20,000 to 50,000 volts
d. 50,000 to 100,000 volts
e. 100,000 to 300,000 volts

20. What is the difficult-to-control particle size range?
a. 0.1 to 0.5 micrometers
b. 0.5 to 2 micrometers
c. 2 to 5 micrometers
d. 5 to 10 micrometers

Review Question Answers

1. What type of electrostatic precipitator generally uses a presaturator chamber or presaturator water sprays before the unit? Select all that apply.
b. Wet, negative corona
c. Wet, positive corona

2. What are the typical superficial gas velocities through a dry, negative corona precipitator?
c. 3 to 6 feet per second

3. What charge is imposed on a collection plate in a dry, negative corona precipitator or a wet, negative corona precipitator?
c. None, the plates are electrically grounded

4. What type of electrostatic precipitator is used to collect organic mists? Select all that apply.
c. Wet, positive corona

5. What type(s) of electrostatic precipitator is least vulnerable to resistivity problems? Select all that apply.
b. Wet, negative corona
c. Wet, positive corona

6. What is the purpose of the T-R set in dry, negative corona precipitators?
d. Increase the voltage and rectify the electricity to direct current

7. What is the normal current in an electrostatic field in good physical condition when the applied secondary voltage is less than the corona onset level?
c. Zero

8. What problems can occur if moisture and/or conductive solids accumulate on the surfaces of the high voltage frame support insulators? Select all that apply.
a. The insulator can overheat and shatter
b. The field served by the insulator could trip offline due to the short circuit

9. What fraction of the particulate matter entering the precipitator is usually collected in the inlet field?
c. 50% to 80%

10. What is the purpose of rapping in dry, negative corona precipitators?
a. Remove large clumps of agglomerated solids precipitated in the field

11. Under what conditions do dry, negative corona precipitators operate best?
b. Moderate resistivity

12. Under what conditions is the dust layer weakly held to the vertical collection plates in a dry, negative corona precipitator?
a. Low resistivity

13. What factors influence the dust layer resistivity for a precipitator operating at less than 350°F? Select all that apply.
a. Gas temperature
b. Sulfuric acid vapor concentration
c. Water vapor concentration

14. The saturation charge is related to _____.
b. The square of the particle diameter

15. Electrical charge is dissipated through dust layers on the collection plates of dry, negative corona precipitators based on _____. Select all that apply.
a. Surface conduction
b. Bulk conduction

16. Resistivity usually _____ over the gas temperature range of 500°F to 800°F.
b. Decreases

17. The secondary voltage is _____.
a. The voltage applied on the discharge electrodes

18. What conditions are inappropriate for dry, negative corona electrostatic precipitators? Select all that apply.
a. Explosive gases or vapors
b. Sticky particulate matter
c. Gas streams vented back into occupied areas

19. Typical secondary voltages in a dry, negative corona precipitator and a wet, negative corona precipitators are in the range of _____.
d. 50,000 to 100,000 volts

20. What is the difficult-to-control particle size range?
a. 0.1 to 0.5 micrometers

Review Problems

1. What is the collection efficiency predicted by the Deutsch-Anderson equation for a precipitator having a collection area of 70,000 ft^2 and a gas flow rate of 440,000 acfm? Assume an effective migration velocity of 0.5 ft/sec.

2. What is the aspect ratio for a five-field electrostatic precipitator having collection plate heights of 30 ft, collection plate lengths of 9 ft, and a precipitator width (normal to gas flow) of 50 ft?

3. What is the average gas velocity passing through the precipitator described in Problem 2 assuming that the gas flow rate is 400,000 acfm?

4. What is the collection plate area of a field having the following characteristics?

- Plate height: 40 ft
- Plate length: 6 ft
- Number of plates: 39
- Plate-to-plate spacing: 9 in

5. What is the SCA of a five-field precipitator having the following characteristics?

- Plate height: 40 ft
- Plate length: 6 ft
- Number of plates: 39
- Plate-to-plate spacing: 9 in
- Number of fields in series: 5
- Average gas velocity: 4.2 ft/sec

Review Problem Solutions

1. What is the collection efficiency predicted by the Deutsch-Anderson equation for a precipitator having a collection area of 70,000 ft^2 and a gas flow rate of 440,000 acfm? Assume an effective migration velocity of 0.5 ft/sec.

Solution

$$\eta = 1 - e^{-\frac{A\omega}{Q}} = 1 - e^{-\frac{\left(70{,}000\,ft^2\right)\left(0.5\frac{ft}{sec}\right)}{\left(440{,}000\frac{ft^3}{min}\right)\left(\frac{min}{60\,sec}\right)}} = 0.9915 = 99.15\%$$

2. What is the aspect ratio for a five-field electrostatic precipitator having collection plate heights of 30 ft, collection plate lengths of 9 ft, and a precipitator width (normal to gas flow) of 50 ft?

Solution

$$A.R. = \frac{L}{H} = \frac{(5\,fields)\left(9\frac{ft}{field}\right)}{30\,ft} = 1.5$$

3. What is the average gas velocity passing through the precipitator described in Problem 2 assuming that the gas flow rate is 400,000 acfm?

Solution

$$v = \frac{Q}{A} = \frac{400{,}000\frac{ft^3}{min}}{(30\,ft)(50ft)} = 266.67\frac{ft}{min} = 4.44\frac{ft}{sec}$$

4. What is the collection plate area of a field having the following characteristics?

- Plate height: 40 ft
- Plate length: 6 ft
- Number of plates: 39
- Plate-to-plate spacing: 9 in

Solution

$$\text{Number of passages} = \text{Number of plates} - 1 = 39 - 1 = 38$$

$$\text{Field plate area} = 2(\text{Number of passages})LH = 2(38)(6\text{ ft})(40\text{ ft}) = 18{,}240\text{ ft}^2$$

5. What is the SCA of a five-field precipitator having the following characteristics?

- Plate height: 40 ft
- Plate length: 6 ft
- Number of plates: 39
- Plate-to-plate spacing: 9 in
- Number of fields in series: 5
- Average gas velocity: 4.2 ft/sec

Solution

$$A = 5\text{ fields}(2)(38)(6\text{ ft})(40\text{ ft}) = 91{,}200\text{ ft}^2$$

$$Q = \left(4.2\frac{\text{ft}}{\text{sec}}\right)\left[(38\,\text{passages})(0.75\,\text{ft})(40\,\text{ft})\right] = 4{,}788\frac{\text{ft}^3}{\text{sec}} = 287{,}280\frac{\text{ft}^3}{\text{min}}$$

$$SCA = \frac{A}{Q} = \frac{91{,}200\,\text{ft}^2}{287.280\dfrac{1{,}000\,\text{ft}^3}{\text{min}}} = 317.46\frac{\text{ft}^2}{1{,}000\,\text{acfm}}$$

References

Beak, W., W. Krawcyzk and J. Richards, "Identifying and minimizing the effects of spatial/temporal fly ash resistivity variations to reduce emissions and maintenance requirements", presented at the Independent Power Generation Conference, New Orleans, LA, 1988.

Bickelhaupt, R.E., *A Technique for Predicting Fly Ash Resistivity*, EPA 600/7-79-204, 1979.

Colbert, T.S., "The electrostatic precipitator and its power supply: a circuit analysis", Paper 79-9.2, presented at the 72nd Annual Meeting of the Air Pollution Control Association, Cincinnati, OH, June 1979.

Engelbrecht, H.L., "Increased plate-to-wire spacing to enhance electrostatic precipitator performance", Paper 83-55.6, presented at the 76th Annual Meeting of the Air Pollution Control Association, June 1983.

Eskra, B.J., and B.G. McKinney, "One year's operating experience with SO_3 conditioning on a large coal-fired unit's electrostatic precipitator", Paper 82-49.3, presented at the 75th Annual Meeting of the Air Pollution Control Association, June 1982.

Feldman, P.L., and K.S. Kumar, "Effects of wide plate spacings in electrostatic precipitators", Paper 90-101.7, presented at the Air and Waste Management Association Meeting, Pittsburgh, PA, June 1990.

Fletcher, H.R., "Operating experience at Detroit Edison with various flue gas conditioning systems", Paper 82-49.1, presented at the 75th Annual Meeting of the Air Pollution Control Association, June 1982.

Gooch, J.R., and H.M. Guillaume, Jr., *Electrostatic Precipitator Rapping Reentrainment and Computer Model Studies*, Electric Power Research Institute Publication FP-792, Vol. 3, 1978.

Hall, H.J., "Summary of overall concepts for design, energization, and control of electrostatic precipitators", Paper 83-57.6, presented at the 76th Annual Meeting of the Air Pollution Control Association, June 1983.

Humbert, C.O., "Electrostatic precipitator rappers: their function, operation, and maintenance", Paper 83-57.3, presented at the 76th Annual Meeting of the Air Pollution Control Association, June 1983.

Jonelis, R.E., and J.A. Jonelis, "Economical, innovative methods of straightening ESP collector plates so as to achieve alignment for the purposes

of improving particulate control and performance", Paper 85-JPGC-APC-5, presented at the American Society of Mechanical Engineers/IEEE Power Generation Conference, Milwaukee, WI, October 1985.

Katz, J., *The Art of Electrostatic Precipitators*, Scholium International, Port Washington, NY, 1979.

Lawless, P., *Electrostatic Precipitator V-I and Performance Model: Users Manual*, EPA 600/R-92-104a, 1992.

Lurgi, G., *Corrosion-Proof Wet Precipitator*, 1988.

Makansi, J., "Particulate control: optimizing precipitators and fabric filters for today's power plants", *Power*, 1986.

McDonald, J.R., and A.H. Dean, *A Manual for the Use of Electrostatic Precipitators to Collect Fly Ash Particles*, EPA 600/8-80-025, 1980.

Neundorfer, M., *Second Symposium on the Transfer and Utilization of Particulate Control Technology, Vol. 2, Electrode Cleaning Systems: Optimizing Rapping Energy and Rapping Control*, EPA 600/9-9-80-039a, 1980.

Raymond, R.K., *Second Symposium on the Transfer and Utilization of Particulate Control Technology, Vol. 2, Electrostatic Precipitators: Electrical Problems and Solutions*, EPA 600/9-9-80-039a, 1980.

Schwab, M.J, and R. Johnson, "Numerical design method for implementing gas distribution within electrostatic precipitators" presented at the 56th Annual Meeting, American Power Conference, Chicago, IL, April 1994.

Steinsvaag, D., "Smoke abatement for textile finishers", American Dyestuff Reporter, September 1992.

Szabo, M.F., and R.W. Gerstle, *Operation and Maintenance of Particulate Control Devices on Coal-fired Utility Boilers*, EPA 600/2-77-129, 1977.

Theodore, L., and A.J. Buonicore, *Industrial Air Pollution Equipment for Particulates*, CRC Press, Cleveland, OH, 1976.

Verhoff, F.H., and J.T. Banchero, *Chemical Engineering Progress*, pp. 70-71, 1974.

Weyers, L.L., and R.E. Cook, *Operating Experience with Flue Gas Conditioning Systems at Commonwealth Edison Company*, Wahlco, Santa Anna, CA, April 1981.

White, H.J., "Fly ash resistivity", *Journal of the Air Pollution Control Association*, 1977.