United States
Environmental Protection
Agency

Human Exposure and Atmospheric Sciences Division
National Exposure Research Laboratory
Research Triangle Park NC 27711

Research and Development

November 1998

Quality Assurance Guidance Document 2.12

Monitoring $PM_{2.5}$ in Ambient Air Using Designated Reference or Class I Equivalent Methods

Contents

Section	Title	No. of Pages
1.0	Scope and Applicability	5
2.0	Prerequisites	8
3.0	Summary	6
4.0	Procurement of Equipment and Supplies	8
5.0	Installation	3
6.0	Calibration Procedures	17
7.0	Filter Preparation and Analysis	19
8.0	Field Operation	12
9.0	Sampler Maintenance	5
10.0	Performance Evaluation Procedures	13
11.0	Calculations, Validations, and Reporting of $PM_{2.5}$ Monitoring Data	7
12.0	Data and Records Management	6
13.0	Assessment of Measurement Uncertainty for Monitoring Data	6
14.0	References	4
15.0	Index	3
Appendix		
A	Measuring Alkalinity of Filters	12

Table of Contents

Section		Page
	List of Figures	vi
	List of Tables	vii
	List of Acronyms and Abbreviations	viii
1.0	**Scope and Applicability**	**1 of 5**
	1.1 Overview and Purpose	1
	1.2 Applicability	1
	1.3 Conventions	2
	1.4 Format and Structure	2
	1.5 Overview of Reference and Equivalent Methods for $PM_{2.5}$	2
	1.5.1 Reference Methods	3
	1.5.2 Equivalent Methods	3
	1.6 Limitations of $PM_{2.5}$ Reference and Class I Equivalent Methods	4
2.0	**Prerequisites**	**1 of 8**
	2.1 Overview and Definitions	1
	2.2 Personnel Qualifications	1
	2.2.1 Laboratory Personnel Qualifications	1
	2.2.2 Field Personnel Qualifications	6
	2.2.3 Training for Laboratory and Field Personnel	6
	2.3 Health and Safety Warnings	6
	2.4 Cautions	7
3.0	**Summary**	**1 of 6**
	3.1 Overview	1
	3.2 Illustrations of Sampler Inlet Components and Sample Flow Paths	1
	3.3 Summary of Field and Laboratory QC Checks	2
	3.4 Summary of Sampling Procedures for $PM_{2.5}$	2
4.0	**Procurement of Equipment and Supplies**	**1 of 8**
	4.1 Overview	1
	4.2 Procurement Prerequisites—Field Operations	2
	4.2.1 Reference or Equivalent Method Sampler	2
	4.2.2 Calibration Equipment	3
	4.2.3 Flow Verification Check Device	4
	4.2.4 Audit Equipment	4
	4.3 Procurement Prerequisites—Laboratory Operations	5
	4.3.1 Filter Media	5
	4.3.2 Filter Support Cassettes	6
	4.3.3 Filter Cassette Protective Containers	6

Table of Contents (continued)

Section **Page**

4.3.4 Insulated Shipping Container 7
4.3.5 Filter Handling Containers 7
4.3.6 Analytical Microbalance 7
4.3.7 Calibration Reference Standards 8

5.0 Installation . . . . . 1 of 3
5.1 Siting Requirements 1
5.1.1 Spatial and Temporal Scales of Site 1
5.1.2 Sampler Location 1
5.1.3 Safety 1
5.1.4 Electrical Considerations 2
5.1.5 Security 2
5.2 Sampler Installation Procedures 2
5.2.1 Receipt of Sampler 2
5.2.2 Laboratory Evaluation 2
5.2.3 Setup at Sampling Site 3
5.2.4 Field Evaluation 3

6.0 Calibration Procedures . . . . . 1 of 17
6.1 Overview 1
6.2 General Aspects of Flow Rate Measurement and $PM_{2.5}$ Sampler Calibration 2
6.3 Calibration of the Sampler Flow Rate Measurement System 3
6.3.1 General Requirements and Guidance 4
6.3.2 Flow Rate Calibration Standards 5
6.3.3 NIST Traceability and Certification of Flow Rate Standards 7
6.3.4 Outline of Generic Flow Rate Calibration Procedure 7
6.4 Calibration of Sampler Temperature Sensors 8
6.4.1 General Requirements and Guidance 8
6.4.2 Temperature Calibration Standards 9
6.4.3 NIST Traceability and Certification of Temperature Standards . . . 10
6.4.4 Outline of Generic Temperature Calibration Procedure 10
6.5 Calibration of Sampler Pressure Sensor 12
6.5.1 General Requirements 12
6.5.2 Calibration Procedures 12
6.5.2.1 Fortin Type Barometer Readings 12
6.5.2.2 Aneroid Type Barometer 13
6.6 Leak Checks 13
6.6.1 External Leak Check 13

Table of Contents (continued)

Section **Page**

6.6.2 Internal Filter Bypass Leak Check 16
6.7 Multipoint Verification/Calibration Frequency 17

7.0 Filter Preparation and Analysis . . . . . 1 of 19
7.1 Overview 1
7.2 Microbalance Environment 1
7.3 Mass Reference Standards 2
7.4 Filter Handling 5
7.5 Filter Integrity Check 5
7.6 Filter Conditioning 6
7.7 Lot Blanks, Laboratory Blanks, and Field Blanks 8
7.8 Electrostatic Charge Neutralization 9
7.9 Presampling Filter Weighing (Tare Weight) 13
7.10 Postsampling Documentation and Inspection 15
7.11 Postsampling Filter Weighing (Gross Weight) 17
7.12 Calculation of Net Mass Filter Loading 18
7.13 Additional $PM_{2.5}$ Analysis Requirements 18
7.14 Internal Quality Control 18

8.0 Field Operation . . . . . 1 of 12
8.1 Overview 1
8.2 Activities to Perform Each Site Visit 1
8.2.1 Beginning a Run 1
8.2.2 Ending a Run 2
8.2.3 Sample Validation 5
8.2.4 Sample Handling 6
8.2.4.1 Handling a Valid Sample 6
8.2.4.2 Handling a Questionable Sample 7
8.3 Activities to Perform Every Five Operating Days 7
8.3.1 Impactor Well Cleaning 7
8.4 Activities to Perform Every Four Weeks 7
8.4.1 Flow Rate Verification Check 7
8.4.2 Field Check Apparatus 8
8.4.3 Leak Check. 8
8.4.4 Procedure for Field Flow Rate Verification Check 11

9.0 Sampler Maintenance . . . . . 1 of 5
9.1 Overview 1
9.2 Five-Day Maintenance Procedures 1

Table of Contents (continued)

Section **Page**

9.2.1 Water Collector 1
9.2.2 Impactor Well 2
9.3 Monthly Maintenance Procedures 2
9.3.1 Inlet 2
9.3.2 Impactor Housing and Well 3
9.3.3 Other 4
9.4 Quarterly Maintenance 5
9.4.1 Inlet and Downtube 5
9.4.2 Impactor 5
9.4.3 Other 5
9.5 Other Periodic Maintenance 5
9.6 Refurbishing $PM_{2.5}$ Samplers 5

10.0 Performance Evaluation Procedures . . . . . 1 of 13
10.1 Overview 1
10.2 Performance Evaluations 2
10.2.1 Sampler Flow Rate Audit 3
10.2.1.1 Flow Rate Audit Data Calculations 4
10.2.2 Temperature Audit Procedure 6
10.2.3 Barometric Pressure Audit Procedures 6
10.2.4 Assessment of Precision Using Collocated Measurements 6
10.2.4.1 Procedure for Collocated Measurements 7
10.2.5 Federal Reference Method Performance Evaluation 7
10.2.6 Balance Accuracy Assessment 8
10.3 Systems Audits 8

11.0 Calculations, Validations, and Reporting of $PM_{2.5}$ Monitoring Data . . . 1 of 7
11.1 Overview 1
11.2 Calculations 1
11.2.1 Sample Volume Calculations 1
11.2.2 Net $PM_{2.5}$ Mass Calculation 2
11.2.3 $PM_{2.5}$ Concentration Calculation 2
11.3 Verification of Manual Calculations and Data Entry 2
11.3.1 Verification of Manual Calculations 3
11.3.2 Verification of Manual Data Entry 3
11.4 Validation 4
11.4.1 Data Validation 4
11.4.2 Validation of Software Used to Process $PM_{2.5}$ Data 5
11.5 Data Reporting 6

Table of Contents (continued)

Section **Page**

11.5.1 Rounding 6
11.5.2 Rounding Rules for Comparison with NAAQS 7

12.0 Data and Records Management . . . . . 1 of 6
12.1 Overview 1
12.2 Methodology for Data and Records Management 1
12.3 $PM_{2.5}$ Records to Create and Retain 2
12.3.1 Sampler Siting and Maintenance Records 2
12.3.2 Analytical Laboratory Installation Records 2
12.3.3 Field Sampling Operation Records 3
12.3.4 Weighing Laboratory Operation Records 3
12.3.5 Quality Assurance Records 3
12.4 Data Reporting Requirements 4

13.0 Assessment of Measurement Uncertainty for Monitoring Data . . . . . 1 of 6
13.1 Overview 1
13.2 Flow Rate Audits 1
13.3 Bias Assessment 2
13.4 Precision 3
13.4.1 Overview 3
13.4.2 Number of Collocated Samplers Required 4
13.4.3 Location of Collocated Samplers 5
13.4.4 Schedule of Operation of Collocated Samplers 6

14.0 References . . . . . 1 of 4

15.0 Index . . . . . 1 of 3

Appendix A—Measuring Alkalinity of Filters . . . . . 1 of 12

List of Figures

Number		Page
3-1	Air flow through the $PM_{2.5}$ sampler inlet head	2 of 7
3-2	Air flow through the $PM_{2.5}$ impactor well and filter holder	2 of 7
3-3	Summary of $PM_{2.5}$ sampling procedures	6 of 7
4-1	Example procurement log	1 of 8
4-2	Orifice dimensions to provide approximately 1 in of water pressure drop at 16.7 L/min	4 of 8
6-1	Example leak-check information sheet	14 of 17
6-2	Flow adapter	15 of 17
7-1	Example laboratory internal QC log	11 of 19
7-2	Example laboratory data form	12 of 19
7-3	$PM_{2.5}$ filter cassette and protective container	16 of 19
8-1	Example $PM_{2.5}$ sampler run data sheet	4 of 12
8-2	Example $PM_{2.5}$ sampler flow check data sheet	10 of 12
8-3	Example of installation of sampler flow check assembly	11 of 12
9-1	Exploded cross-sectional view of design of a $PM_{2.5}$ impactor well and filter holder	3 of 5
9-2	Exploded cross-sectional view of a PM_{10} sampler inlet head	4 of 5
10-1	Example $PM_{2.5}$ flow rate, temperature, and pressure audit form	5 of 13
10-2	Example systems audit questionnaire	10 of 13

List of Tables

Number		Page
2-1	Definitions of Key Terms	2 of 8
3-1	Field QC/QA Checks	4 of 7
3-2	Laboratory QC/QA Checks	5 of 7
4-1	Acceptance Checks and Limits for Procurement of Equipment and Supplies	2 of 8
4-2	Specifications for 200-mg Mass Reference Standard	8 of 8
6-1	Calibration and Verification Check Intervals	17 of 17
7-1	Filter Preparation and Analysis Checks	3 of 19
8-1	Sampling Procedure Checks	3 of 12
9-1	Summary of $PM_{2.5}$ Sampler Maintenance Items	2 of 5
10-1	Systems and Performance Evaluation Components for Manual Method $PM_{2.5}$ Samplers	1 of 13
11-1	Formulas for Calculations Associated with $PM_{2.5}$ Monitoring	1 of 7
12-1	Summary of Information to be Provided by Sampler	4 of 6
13-1	Example of Collocated Sampler Requirements	5 of 6

List of Acronyms and Abbreviations

AIRS	Aerometric Information Retrieval System
ANSI	American National Standards Institute
ASQC	American Society for Quality Control
ASTM	American Society for Testing and Materials
CFR	*Code of Federal Regulations*
CV	coefficient of variation
DOP	dioctylphthalate
DQO	data quality objective
EPA	Environmental Protection Agency
FEM	Federal Equivalent Method
FR	flow rate
FRM	Federal Reference Method
HEPA	high-efficiency particulate air
NAAQS	National Ambient Air Quality Standards
NIST	National Institute of Standards and Technology
NVLAP	National Voluntary Laboratory Accreditation Program
OAQPS	Office of Air Quality Planning and Standards
P_a	pressure, ambient
PAMS	Photochemical Assessment Monitoring Stations
PM_{10}	particulate matter ≤ 10 µm
$PM_{2.5}$	particulate matter ≤ 2.5 µm
PMP	polymethylpentene
^{210}Po	polonium-210
PSD	prevention of significant deterioration
PTFE	polytetrafluoroethylene
QA/QC	quality assurance/quality control
QA	quality assurance
QAD	Quality Assurance Division
QAPP	quality assurance project plan
QC	quality control
RH	relative humidity
SLAMS	State and local air monitoring stations
SOP	standard operating procedure
SRM	Standard reference material
SVOC	semivolatile organic compound
T_a	temperature, ambient
TSP	total suspended particulate
WINS	well impactor ninety-six

1.0 Scope and Applicability

1.1 Overview and Purpose

This document is intended to assist personnel of air monitoring agencies that use reference methods or Class I equivalent methods to monitor ambient air for particles with an aerodynamic diameter equal to or less than 2.5 µm, known as $PM_{2.5}$. The formal specifications for $PM_{2.5}$ reference method samplers and for obtaining valid reference method measurements are set forth in the U.S. Environmental Protection Agency's (EPA's) monitoring regulations at 40 *Code of Federal Regulations* Part 50, Appendix L (EPA 1997a).* This document reviews those formal requirements and provides clarifications and supplemental information in greater detail than can be provided in the formal regulatory requirements. Because this supplemental information is intended for method users, it emphasizes the operational aspects of the method, rather than the design and performance specifications for the sampler, which are of more concern to the sampler manufacturer. This document also provides recommended quality assurance (QA) procedures and guidance to help monitoring agencies reliably achieve the data quality objectives (DQOs) established for $PM_{2.5}$ monitoring. The goal for acceptable measurement uncertainty has been defined as 10 percent coefficient of variation (CV) for total precision and ±10 percent for total bias (Papp et al. 1998). The information provided here, together with the more sampler-specific information and instructions provided by the manufacturer of the selected $PM_{2.5}$ sampler and contained in the sampler's operation or instruction manual, should be used by each monitoring agency to develop its own agency-specific standard operating procedure (SOP) to govern its individual $PM_{2.5}$ monitoring activity.

1.2 Applicability

This document is primarily applicable to $PM_{2.5}$ ambient air monitoring with reference methods carried out by State and local air monitoring agencies in their State and local air monitoring stations' (SLAMS's) air surveillance networks under the air monitoring requirements of 40 CFR Part 58 (EPA 1997b). The document is also applicable to other organizations required to carry out SLAMS or SLAMS-related $PM_{2.5}$ monitoring and to any $PM_{2.5}$ monitoring activity for which the $PM_{2.5}$ reference method measurements will be entered into the Aerometric Information and Retrieval System (AIRS) database. The recommendations and guidance in this document—to the extent that they go beyond the specific regulatory requirements set forth in the method or in the sampler-specific requirements contained in a particular sampler's operation or instruction manual—are not mandatory or binding. However, monitoring agencies are strongly encouraged to adopt and follow these recommendations and guidance to help ensure that monitoring data are of acceptable quality. Following the recommendations and guidance herein is also strongly encouraged for any $PM_{2.5}$ monitoring activity using reference or Class I equivalent methods where a high level of data quality is needed.

This document is not a full description of a $PM_{2.5}$ monitoring method and does not substitute for the formal method description as set forth in the $PM_{2.5}$ reference method (EPA 1997a) or for the

*All references are listed in Section 14.0.

sampler-specific requirements contained in the associated operation or instruction manual, which is an official part of each designated reference or equivalent method for $PM_{2.5}$.

1.3 Conventions

Where this document refers to mandatory method requirements, the terms "shall" and "must" are used, and a supporting reference to the applicable section of the reference method regulation is generally provided. Use of the word "should" indicates an activity or procedure that is strongly recommended to help achieve a high level of measurement data quality but is not formally required by the method itself. Finally, the word "may" is used to indicate activities or suggestions that are optional or discretionary. The use of these terms is generally consistent with American National Standards Institute/American Society for Quality Control (ANSI/ASQC) E4-1994 guidance (ANSI/ASQC 1994).

1.4 Format and Structure

The format and structure of this document are somewhat different from the format and structure of previously published handbook documents. The page format has been updated to a new uniform standard that will be used for future sections of the *Quality Assurance Handbook for Air Pollution Measurement Systems*. It features a common, easily read font for text and a new standard bold sans serif font for headings. New uniform header and footer information indicates the organizational position of each page in the overall handbook structure, giving the volume number, document number, and subject identification; the major section number and title; the section page number; and the revision date.

The organization of the document has also been modified somewhat from that used previously, with some new or changed section titles and some entirely new section topics. These changes are intended to align the structure more closely with the organizational structure and topics of SOPs recommended by EPA's Quality Assurance Division (QAD) in its G-6 guidance (EPA 1995). This closer alignment will help monitoring agencies use this document to prepare their individual SOPs for $PM_{2.5}$ monitoring. It should be clearly understood, however, that this document is not a ready-made, generic SOP as is and that it must be adapted and tailored specifically to each monitoring agency's individual policies and circumstances to become an official agency SOP.

1.5 Overview of Reference and Equivalent Methods for $PM_{2.5}$

A "method" for $PM_{2.5}$ generally consists of the following:

- A $PM_{2.5}$ sampler or analyzer designed, built, and sold by a particular manufacturer
- An operation or instruction manual provided by the instrument manufacturer that describes the proper use and operation of the sampler or analyzer
- The other operational and quality assurance requirements necessary to obtain reliable $PM_{2.5}$ concentration measurements.

Methods used for monitoring $PM_{2.5}$ in SLAMS or SLAMS-related air monitoring are required to be either reference or equivalent methods (EPA 1997c) as designated by EPA under the requirements and provisions of 40 CFR Part 53 (EPA 1997d). For most SLAMS purposes, reference and equivalent methods may be used interchangeably, and a particular method's

identity as either a reference method or an equivalent method is irrelevant. However, for some purposes, such as collocated auditing, a reference method may be specifically required. A current publication, *List of Designated Reference and Equivalent Methods*, identifying all methods that have been designated as reference or equivalent methods by EPA is available from any EPA Regional Office or by writing to Department E (MD-46), U.S. Environmental Protection Agency, Research Triangle Park, NC 27711. The U.S. EPA's Ambient Monitoring Technology Information Center (AMTIC) web site, http://www.epa.gov/ttn/amtic/, contains several sites with information on all the designated reference and equivalent methods for criteria pollutants and will include $PM_{2.5}$ methods as they are designated and updated. Refer to the "what's new" topic for the latest updates.

1.5.1 Reference Methods

All formal sampler design and performance requirements and the operational requirements applicable to reference methods for $PM_{2.5}$ are specified in Appendix L of 40 CFR Part 50 (EPA 1997a). These requirements are very specific and include explicit design specifications for the type of sampler, the type of filter, the sample flow rate, and the construction of the sample's collecting components. However, various designs for the flow rate control system, the filter holder, the operator interface controls, and the exterior housing are possible. Hence, various reference method samplers from different manufacturers may vary considerably in appearance and operation. Also, a reference method may have a single filter capability (single sample sampler) or a multiple filter capability (sequential sample sampler), provided there are no deviations in the design and construction of the sample collection components specified in the reference method regulation. A $PM_{2.5}$ method is not a reference method until it has been demonstrated to meet all the reference method regulatory requirements and has been officially designated by EPA as a reference method for $PM_{2.5}$.

1.5.2 Equivalent Methods

Equivalent methods for $PM_{2.5}$ have much wider latitude in their design, configuration, and operating principles than reference methods. These methods are not required to be based on filter collection of $PM_{2.5}$; therefore, continuous or semicontinuous analyzers and new types of $PM_{2.5}$ measurement technologies are not precluded as possible equivalent methods. Equivalent methods are not necessarily required to meet all the requirements specified for reference methods, but they must demonstrate both comparability to reference method measurements and similar $PM_{2.5}$ measurement precision.

The requirements that some (but not all) candidate methods must meet to be designated by EPA as equivalent methods are specified in 40 CFR Part 53. To minimize the difficulty of meeting equivalent method designation requirements, three classes of equivalent methods have been established in the 40 CFR Part 53 regulations, based on the degree to which a candidate method deviates from the reference method requirements. All three classes of equivalent methods are acceptable for SLAMS or SLAMS-related $PM_{2.5}$ monitoring. But not all types of equivalent methods may be equally suited to specific $PM_{2.5}$ monitoring requirements or applications.

Class I equivalent methods are very similar to reference methods, with only minor deviations, and must meet nearly all of the reference method specifications and requirements. The requirements for designation as Class I equivalent methods are only slightly more extensive than the

designation requirements for reference methods. Also, because of their substantial similarity to reference methods, Class I equivalent methods operate very much the same as reference methods, and most of the information and guidance in this document is applicable to Class I equivalent methods.

Class II equivalent methods are filter-collection-based methods that differ more substantially from the reference method requirements. The requirements for designation as Class II methods may be considerably more extensive than for reference or Class I equivalent methods, depending on the specific nature of the variance from the reference method requirements. The information and guidance in this document may be only partially applicable to Class II equivalent methods. The operation or instruction manual associated with Class II equivalent methods will, therefore, have to be more detailed in some areas than for reference or Class I equivalent methods to provide information and guidance not covered by this document.

Class III equivalent methods cover any $PM_{2.5}$ methods that cannot qualify as reference or Class I or II equivalent methods because of more profound differences from the reference method requirements. This class encompasses $PM_{2.5}$ methods such as continuous or semicontinuous $PM_{2.5}$ analyzers and potential new $PM_{2.5}$ measurement technologies. The requirements for designation as Class III equivalent methods are the most extensive, and, because of the wide variety of $PM_{2.5}$ measurement principles that could be employed for candidate Class III equivalent methods, the designation requirements are not explicitly provided in 40 CFR Part 53. For similar reasons, much of the information and guidance in this document may not be applicable to operation of Class III equivalent methods.

1.6 Limitations of $PM_{2.5}$ Reference and Class I Equivalent Methods

There are several conditions or effects that limit the degree to which a $PM_{2.5}$ reference or Class I equivalent method can precisely determine the mass concentration of particulate matter in the atmosphere. Procedures to control such effects are discussed throughout this document. One limitation is maintaining the specified ambient air flow rate through the sampling inlet and filter assembly. The flow rate determines the size of the particles that are collected. The effects of this limitation are minimized by following sampler construction requirements and by employing procedures and checks to ensure the proper flow rate is maintained within close tolerances. Refer to Section 6.0, "Calibration Procedures," and to Section 8.0, "Field Operation," for guidance.

Another important limitation involves changes in the weight of a collected sample due to mishandling, chemical reactions, and volatilization. Handling procedures, choice of filter media, humidity and temperature control of the filter and sample during collection and subsequent processing, and promptness in weighing the sample following collection all help control filter artifacts. The chemical makeup of the $PM_{2.5}$ particulate matter will vary with sampling location and source. Thus, the magnitude of $PM_{2.5}$ weight changes due to chemical and physical processes will also vary with site location.

Weight loss due to mechanical removal of particles from the filter is minimized by carefully removing the filter, in its cassette, from the sampler and storing the filter/cassette in a protective container during transit to the weighing laboratory. Once the filter arrives at the laboratory, weight loss can be minimized by carefully removing the filter from the cassette, conditioning the filter, and neutralizing the static charge on the filter before weighing. Refer to Section 7.0, "Filter

Preparation and Analysis."

The choice of an essentially neutral Teflon® media filter as the collecting surface minimizes the weight gain that occurs when sulfate-containing particles form by chemical reactions of sulfur dioxide gas at the surface of alkaline media such as glass fiber filters. Appendix A to this document discusses this effect and includes a procedure for measuring the alkalinity of filters. If nitric acid vapor is present at a sampling location, it can deposit on a Teflon® filter and cause small weight gains in proportion to the amount of nitric acid present in the atmosphere (Lipfert 1994). This weight gain may not be controllable. Weight losses can occur due to thermal or chemical decomposition or evaporation of compounds like ammonium nitrate (NH_4NO_3), which releases ammonia and nitric acid as gases. Semivolatile organic compounds (SVOCs) may be part of the sample makeup; if so, they may evaporate and cause sample weight losses. Such weight losses are minimized or standardized by maintaining the sampler filter compartment's temperature near ambient conditions during the sampling process, keeping the sample cool during transport to the laboratory, and promptly conditioning and weighing the sample following its receipt in the laboratory. Weight gain or loss due to absorption or desorption of water vapor on the filter or on the particulate matter is minimized by specifying low moisture pickup for manufactured filters and by conditioning the filters within specified humidity and temperature ranges, both before use and after receipt from the field. Refer to Section 7.0, "Filter Preparation and Analysis," for further guidance.

Errors in the gravimetric analysis of samples can also result from the buildup of electrostatic charges on filters during their manufacture or during sampling (Engelbrecht et al. 1980). This static buildup will interfere with microbalance weighing, but it can be reduced or eliminated by using Polonium-210 (^{210}Po) antistatic strips before beginning the weighing process.

2.0 Prerequisites

2.1 Overview and Definitions

The air pollutant known as $PM_{2.5}$ is the most recent addition to the ambient air criteria pollutants, which are required by Federal law to be measured and reported on a nationwide basis. Regulations governing its measurement were effective September 16, 1997.

This document provides a review of monitoring requirements and offers guidance on ensuring the quality of the collection of samples, the determination of the volume of air sampled, and the gravimetric determination of the amount of $PM_{2.5}$ collected. From these data, the concentration of $PM_{2.5}$ particles in the ambient air can be calculated and expressed as micrograms per cubic meter ($\mu g/m^3$) of air. This document addresses procedures that apply mainly to reference and Class I equivalent methods for sampling $PM_{2.5}$. Although some of the terminology associated with the $PM_{2.5}$ sampling method may be familiar to those who have operated dichotomous samplers, an annotated listing of acronyms, abbreviations, specialized terms, and other expressions is given in Table 2-1 to familiarize the new user of $PM_{2.5}$ samplers with key terms.

2.2 Personnel Qualifications

General aspects of personnel qualifications, training, and guidance are discussed in Volume II, Part I, Section 4 of the *Quality Assurance Handbook for Air Pollution Measurement Systems* (EPA 1997). State and Local Air Monitoring Stations (SLAMS) reporting organizations or State agencies can use information from this source and specific information about $PM_{2.5}$ sampling and analysis to develop a training program for their employees.

The responsibility for ensuring adequate training of personnel rests with the organization's management. The Quality Assurance Coordinator of the organization should be involved as well. He or she should stress to management the need for adequate training and recommend that employees be tested or examined to evaluate the success of training and identify where further emphasis is needed.

2.2.1 Laboratory Personnel Qualifications

All laboratory personnel should be familiar with general environmental laboratory procedures and techniques. Those who operate the microbalance in the laboratory must be very conscientious and attentive to details in order to report complete and high-quality $PM_{2.5}$ data. Persons involved with $PM_{2.5}$ laboratory operations should be trained to perform the following operations:

- Use common methods to determine temperature, pressure, and relative humidity (RH) in the laboratory
- Use microbalance and antistatic devices
- Label, organize, and archive filters and samples in the laboratory.

Table 2-1. Definitions of Key Terms

Term	Definition
Accuracy	The degree of agreement between an observed value and an accepted reference value; includes a combination of random error (precision) and systematic error (bias) components due to sampling and analytical operations. It is estimated by collocated sampling.
Actual conditions	The actual ambient temperature and pressure of a gas at the time its volume (or volumetric flow rate) is measured.
Analyst	A staff member who weighs the new and used filters and computes the concentration of $PM_{2.5}$ in $\mu g/m^3$.
American National Standards Institute (ANSI)	Administrator and coordinator of the U.S. private-sector voluntary standardization system.
American Society for Testing and Materials (ASTM)	A professional organization that develops and distributes protocols for testing and provides reference standards.
ASTM Class 1 standards	The standards for weighing operations with a microbalance. Certified by ASTM.
Bias	The systematic or persistent distortion of a measurement process that causes errors in one direction.
Cassette	A device supplied with $PM_{2.5}$ samplers to allow a weighed Teflon® filter to be held in place in the sampler and manipulated before and after sampling without touching the filter and to minimize damage to the filter and/or sample during such activities.
Class I equivalent method	An equivalent method for $PM_{2.5}$ based on a sampler that closely meets the specifications for reference method samplers (40 *Code of Federal REgulations* [CFR] Part 58, Appendix L), with only minor deviations, as defined by the U.S. Environmental Protection Agency (EPA).
Class II equivalent method	An equivalent method for $PM_{2.5}$, as defined by the U.S. EPA, that is based on a sampler having more significant deviations from reference method sampler specifications than a Class I equivalent method.
Class III equivalent method	An equivalent method for $PM_{2.5}$, as defined by EPA, that is based on a device that incorporates major modifications to the reference method sampler or on a fundamentally different design or principle of measurement.
Collocation	The placement of a second $PM_{2.5}$ sampler (known as the duplicate sampler) near a permanent network sampler (known as the primary sampler). Comparison of results from the two samplers is used to estimate the precision and bias of the primary sampler.
Control chart	A graphical presentation of quality control (QC) information over a period of time. If a procedure is "in control," the results usually fall within established control limits. The chart is useful in detecting defective performance and abnormal trends or cycles, which can then be corrected promptly.

(continued)

Table 2-1. Continued

Term	Definition
Downtube	The vertically oriented tube that connects the $PM_{2.5}$ sampler inlet to sampler components inside the sampler case. To check the sample flow rate, the sampler inlet is removed from the downtube and a flow rate standard is connected in its place.
Electrostatic charge buildup	A buildup of static electrical charge on an item, such as the $PM_{2.5}$ filter, which makes it difficult to handle, attracts or repels particles, and can influence its proper weighing.
Equilibration chamber	A clean chamber usually constructed of plastic or glass, held at near constant temperature and humidity, used to store and condition $PM_{2.5}$ filters until they and their collected particulate sample (if the filters have been exposed) have reached a steady state of moisture equilibration.
Field blank filter	New filters, selected at random, that are weighed at the same time that presampling weights are determined for a set of $PM_{2.5}$ filters and used for quality assurance (QA) purposes. These field blank filters are transported to the sampling site in the same manner as filters intended for sampling, installed in the sampler, removed from the sampler without sampling, stored in their protective containers inside the sampler's case at the sampling site until the corresponding exposed filter(s) is (are) retrieved, and returned for postsampling weighing in the laboratory, where they are handled in the same way as an actual sample filter and reweighed as a QC check to detect weight changes due to filter handling.
Flow adapter device	A tight-fitting connecting device that is inserted in place of the $PM_{2.5}$ sampler inlet on the upper end of a sampler's downtube and used to connect a flow rate calibration or audit device to check the sample flow rate.
Flow calibration device	A National Institute of Standards and Technology (NIST)-traceable flow-determining apparatus (also called a flow rate standard) that is attached to the flow adapter device and used to assist in measuring and setting the volumetric flow rate of air into the sampler. Bubble flowmeters, piston flowmeters, and orifice devices are the most common types of flow rate standards.
Flow check filter	A standard $PM_{2.5}$ filter that is placed in the sampler during the flow check procedure; it is later discarded and not used for sampling.
Impactor	An inertial particle-size separator. A $PM_{2.5}$ reference or Class I equivalent method sampler uses a specially shaped inlet followed by an impactor that allows only particulate matter of well-defined size ranges to penetrate to the filter collection portion of the collector.
Impactor well	That portion of the sampler inlet where particles larger than 2.5 µm impact and are held by a filter soaked with oil (tetramethyl tetraphenyltri-siloxane) such that they are removed from the sample air stream.

(continued)

Table 2-1. Continued

Term	Definition
Laboratory blank filter	New filters that are weighed at the time of determination of the pre-sampling (tare) weight of each set of $PM_{2.5}$ filters intended for field use. These laboratory blank filters remain in the laboratory in protective containers during the field sampling and are reweighed in each weighing session as a QC check.
Leak check	Checks made to ensure there are no significant leaks into or within the sampler. An external leak check, which can be carried out automatically by the sampler, is used to detect leakage into the sampler system. An internal bypass leak check is used to determine if any portion of the flow is bypassing the sampler's filter.
Mass reference standard	ASTM- or NIST-traceable weighing standards, generally in the range of weights expected for the filters.
Microbalance	A type of analytical balance that can weigh to the nearest 0.001 mg (that is, 1 µg or one-millionth g).
Operator	A staff member who services a $PM_{2.5}$ sampler in routine operation at a field site and who may also be responsible for transporting the sample filters to and from the laboratory.
Orifice flow rate check device	One type of flow rate calibration or check device (transfer standard), often used in the field, based on an established relationship between flow rate and pressure drop across the orifice plate and often used in the field. An orifice's operating characteristics are determined in the laboratory using a flow rate standard such as a soap film flowmeter. Orifice devices generally require temperature and pressure corrections.
P_a	Local ambient (barometric) pressure.
$PM_{2.5}$	Particulate matter (suspended in the atmosphere) having an aerodynamic diameter less than or equal to a nominal 2.5 µm, as measured by a reference method based on 40 CFR Part 50, Appendix L, and designated in accordance with 40 CFR Part 53.
$PM_{2.5}$ sampler	A sampler used for monitoring $PM_{2.5}$ in the atmosphere that collects a sample of particulate matter from the air based on principles of inertial separation and filtration. The sampler also maintains a constant sample flow rate and may record the actual flow rate and the total volume sampled. $PM_{2.5}$ mass concentration is calculated as the weight of the filter catch divided by the sampled volume. A sampler cannot calculate $PM_{2.5}$ concentration directly.
Polonium-210 (^{210}Po) antistatic strip	A device containing a small amount of ^{210}Po that emits α particles (He^{2+}) that neutralize the static charge on filters, making them easier to handle and their weights more accurate.
Precision	A measure of random variation among individual measurements of the same property, usually under prescribed identical conditions. For ambient particulate concentration measurements, precision is usually expressed in terms of a standard deviation estimated by collocated sampling when data are reported to the Aerometric Intervention and Retrieval System (AIRS) database.

(continued)

Table 2-1. Continued

Term	Definition
Primary National Ambient Air Quality Standard (NAAQS) for $PM_{2.5}$	The NAAQS for $PM_{2.5}$ is defined in 40 CFR Part 50 as follows: (a) 15 µg/m^3, annual mean, based on the 3-year average of the annual arithmetic mean $PM_{2.5}$ concentrations, spatially averaged across an area; (b) 65 µg/m^3, 24-hour average, based on the 3-year average at the 98th percentile of 24-hour $PM_{2.5}$ concentrations at each population-oriented monitor within an area.
Polytetrafluoroethylene (PTFE)	The polymer that is used to manufacture the 47-mm-diameter filters for $PM_{2.5}$ Federal Reference Method (FRM) and Federal Equivalent Method (FEM) samplers. Also known as Teflon®.
Q_a	The sampler flow rate expressed at ambient (actual) conditions of temperature and pressure.
QA supervisor or coordinator	A staff member who assists in preparation of the reporting organization's quality plan, makes recommendations to management on quality issues (including training), oversees the quality system's control and audit components, and reports the results.
Readability	The smallest difference between two measured values that can be read on the microbalance display. The term "resolution" is a commonly used synonym.
Repeatability	A measure of the ability of a microbalance to display the same result in repetitive weighings of the same mass under the same measurement conditions. The term "precision" is sometimes used as a synonym.
Standard conditions (EPA)	EPA-designated atmospheric conditions of 1 atm pressure (760 mmHg) and 25 °C (298 K). Standard conditions are not used for reporting $PM_{2.5}$ data; actual [uncorrected] conditions must be used for reporting.
T_a	The ambient temperature.
Traceable	A term signifying that a local standard has been compared and certified, either directly or by not more than one intermediate standard, to a NIST-certified primary standard, such as a thermometer or standard reference material (SRM).
Transfer standard	A reference standard device (for temperature, flow rate, and so on) that has been compared to a NIST reference standard and is subsequently used to calibrate, audit, or check other measurement systems or devices.
Total suspended particulate (TSP)	Particulate matter collected by a high-volume sampler, which has no particular particle size selectivity.
V_a	An air volume measured or expressed at ambient (actual) conditions of temperature and pressure.
WINS	The name given to the design of the particle impactor specified by EPA for reference method samplers for $PM_{2.5}$; an acronym for "Well Impactor Ninety Six."

2.2.2 Field Personnel Qualifications

All field operations personnel should be familiar with environmental field measurement techniques. Those who service the $PM_{2.5}$ sampler in the field must be very conscientious and attentive to detail in order to report complete and high-quality $PM_{2.5}$ data. Persons qualified to perform $PM_{2.5}$ field operations should be able to

- Operate the $PM_{2.5}$ sampler
- Calibrate, audit, and troubleshoot the $PM_{2.5}$ sampler
- Use common methods to determine temperature, pressure, flow rate, and RH in the field
- Enter data into the AIRS and other databases.

2.2.3 Training for Laboratory and Field Personnel

Available means for training laboratory and field personnel are listed below. Each individual should receive training appropriate to his or her duties on the $PM_{2.5}$ monitoring program.

- Initially, train field personnel who are already familiar with high-volume and dichotomous sampler operations and laboratory personnel who are already familiar with weighing room techniques and requirements.
- Have all personnel study the relevant sections of this QA handbook, the operating manuals for the samplers and/or the microbalance, and the CFR citations.
- Develop a training manual and operations checklist.
- Have personnel attend relevant State- or regionally sponsored training workshops.
- Have personnel attend relevant EPA-sponsored training programs.
- Have personnel watch and study instructional videos that may become available.
- Have experienced operators instruct others through on-the-job training.
- Have newly trained operators pass a hands-on test of procedures.

2.3 Health and Safety Warnings

To prevent personal injury, all employees must heed any warnings that are associated with operation of the microbalance, the $PM_{2.5}$ sampler, and any supporting equipment and supplies. Specific health and safety warnings are generally found at the point in the operating manual or troubleshooting guide where they are most applicable.

In general, health and safety warnings fall into these categories:

- Electrical
- Chemical
- Equipment placement and stability.

Electrical safety considerations that apply to the $PM_{2.5}$ sampler include the following:

- Make all electrical connections in accordance with national codes. Always use a third- wire grounding arrangement on samplers and any electrical appliances or test rigs. To minimize the possibility of electrical shock and injury, always use a grounded outlet and cord. This process avoids the possibility of electrocution.
- Electrical supply lines to the $PM_{2.5}$ sampler must be installed so that they are protected from degradation and hazards. Inspect the electrical cords and connections for signs of wear and have an electrician repair or replace them as needed.
- Always unplug the power to the sampler when servicing or replacing parts in areas requiring removal of protective panels.
- Avoid contact of jewelry with electrical circuits. Remove rings, watches, bracelets, and necklaces to prevent shorting and electrical burns.
- Use caution when working near moving parts (such as pumps) to avoid injury.
- Be aware of weather patterns; leave the area if lightning storms approach because the sampler is elevated and made of conductive metal.

Chemical safety considerations that apply to $PM_{2.5}$ operations include the following:

- Use care in the application of cleaning solvents, greases for O-rings, and silicone oil for the impactor well. Use of gloves is recommended. Wash hands thoroughly after working with chemicals. Provide good ventilation if organic solvents are used. Dispose of chemicals and shop towels properly.
- Mercury metal, a poisonous material, is present in some types of barometers and RH indicators. If liquid mercury is spilled, it must be cleaned up and disposed of properly. Use protective equipment to avoid inhalation of vapors and impermeable gloves to avoid skin contact. Mercury cleanup kits are available. Avoid its use, if possible, to preclude mercury exposure.
- Exercise caution when using antistatic devices containing radioactive polonium sources. Keep an inventory of the location and size of antistatic devices. Dispose of the devices in accordance with State and local regulations. Also avoid touching pump or fan motors, which may be hot. Avoid injury from moving parts, such as fans and filter-changing mechanisms.

Equipment placement and stability are important as well. Ensure that the $PM_{2.5}$ sampler(s) and associated equipment are stably mounted to the ground or another surface so that they do not tip over. Electrical wires should be installed so no one will trip over them and be injured. If the sampler is placed on the roof of a building or on another elevated location, ensure that railings are installed and warning signs are placed to prevent falls.

2.4 Cautions

Damage to the $PM_{2.5}$ sampler may result if caution is not taken to properly install and maintain the device. Follow the manufacturer's instructions for maintaining the pump, for cleaning the

interior and exterior surfaces, and for safe, secure installation.

The weighing room must be maintained in a state of good order so that samples are not contaminated, misplaced, or misidentified. The room air must be relatively dust-free and controlled within specified temperature and humidity ranges. The microbalance must be placed on a vibration-free mounting. Care must be taken to avoid bumping the balance and disturbing its calibration settings. The calibration weights used to check balance precision and accuracy must be stored in a secure location away from sources of corrosion and should be used only for filter weighing by a knowledgeable analyst and handled only with plastic tweezers to prevent scoring and weight changes.

Finally, exercise care in handling new and used filters. If details concerning weighing, labeling, and transporting filters are not followed precisely, errors will result. Rough handling of used filters may dislodge $PM_{2.5}$ material. Inadequate conditioning of filters at the specified temperatures and humidities or long delays between sample retrieval and sample weighing may lead to positive or negative weight changes and, thus, inaccurate $PM_{2.5}$ concentrations.

(continued)

3.0 Summary

3.1 Overview

The procedures in this document are designed to serve as guidelines for the development of State or local agency quality assurance (QA) programs in support of measurements of $PM_{2.5}$ using either Federal Reference Method (FRM) samplers or Class I equivalent method samplers. Section 3.1 gives background information on the development and intended uses of FRM and Class I equivalent method samplers; Section 3.2 illustrates the design of the $PM_{2.5}$ sampler and describes how $PM_{2.5}$ particles are captured. Tables in Section 3.3 summarize the required field and laboratory quality control (QC) checks and their frequencies. Section 3.4 contains a checklist of the typical steps involved in servicing a sampler in the field.

As described in 40 CFR Part 50, Appendix L (EPA 1997a), the reference method for $PM_{2.5}$ sampling employs a sampler to draw a measured quantity of ambient air at a constant volumetric flow rate (16.67 L/min) through a specially designed particle-size discrimination inlet. $PM_{2.5}$ particles are those particles with an aerodynamic diameter less than or equal to a nominal 2.5 µm. Particles in the 2.5 µm and smaller size range are collected on a 46.2-mm- diameter Teflon® filter during the specified 23- to 25-hour sampling period. Each filter is weighed before use and after sampling. From these measurements, the mass of the collected $PM_{2.5}$ sample can be calculated.

The total volume of air sampled is determined from the measured volumetric flow rate and the sampling time. The mass concentration of $PM_{2.5}$ in the ambient air is computed as the total mass of collected particles in the $PM_{2.5}$ size range divided by the total volume of air sampled and measured under ambient (actual) conditions of temperature and pressure. The $PM_{2.5}$ concentration is thus expressed as $\mu g/m^3$ of air. The particle-size discrimination characteristics of the sampler inlet, downtube, fractionator, and filter holder are all specified by design in 40 CFR Part 50, Appendix L (EPA 1997a). In addition, specific performance characteristics of the sampler are tested in accordance with the procedures in 40 CFR Part 53, Subpart E (EPA 1997b). Sampling methods for $PM_{2.5}$ that meet all requirements in both Parts 50 and 53 are designated as $PM_{2.5}$ FRMs for use in State and Local Air Monitoring Stations (SLAMS) and Prevention of Significant Deterioration (PSD) monitoring networks. These designated methods are identified by a specific number and can also be identified by the manufacturer and model number of the sampler.

3.2 Illustrations of Sampler Inlet Components and Sample Flow Paths

Figure 3-1 illustrates the inlet of the $PM_{2.5}$ sampler. This inlet is designed to representatively extract ambient aerosols from the surrounding airstream, remove particles with aerodynamic diameters greater than 10 µm, and send the remaining smaller particles to the next stage. Figure 3-2 illustrates the impactor and filter holder assembly that first removes those particles less than 10 µm but greater than 2.5 µm in diameter but allows particles of 2.5 µm in diameter to pass and collect on a Teflon® filter surface. Downstream of the inlet, particles less than 10 µm but greater than 2.5 µm are removed by a single-stage, single-flow, single-jet impactor assembly. The well of the impactor assembly contains a 37-mm-diameter glass fiber filter immersed in 1 mL of low-

volatility, low-viscosity diffusion oil. The oiled glass fiber filter removes particles between 10 and 2.5 µm in diameter by preventing bouncing of the incoming particles.

3.3 Summary of Field and Laboratory QC Checks

Tables 3-1 and 3-2 summarize the field and laboratory QC checks required to collect and process $PM_{2.5}$ according to U.S. EPA regulations. The frequencies of the checks are listed and cross-references are made to the *Code of Federal Regulations* and to this document.

3.4 Summary of Sampling Procedures for $PM_{2.5}$

To illustrate the steps to install a filter/cassette in the sampler to begin a run and the steps to shut down the

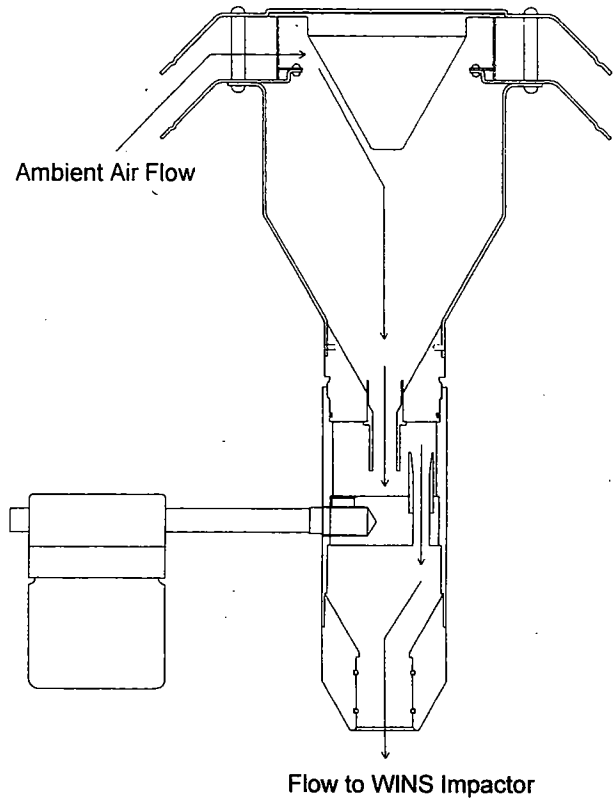

Figure 3.1. Air flow through the $PM_{2.5}$ sampler inlet head.

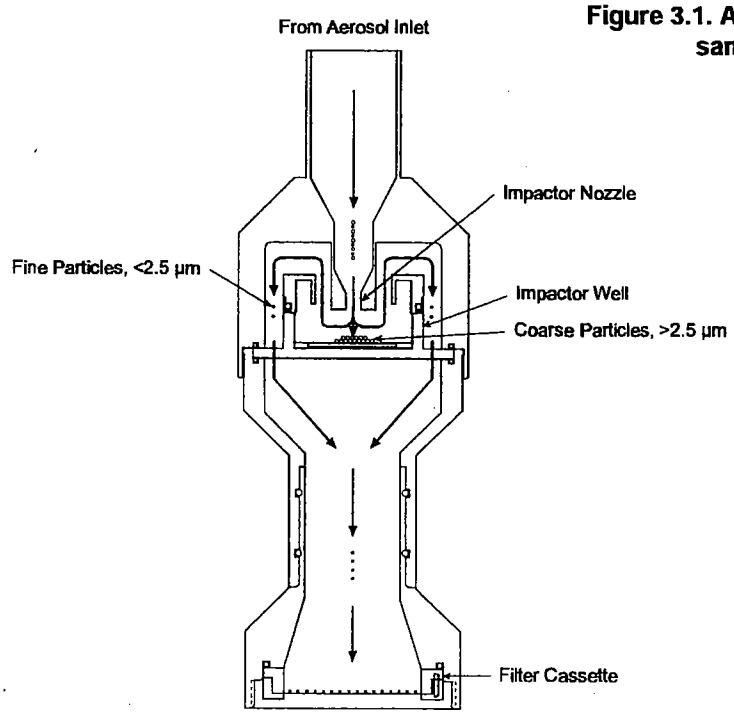

Figure 3-2. Air flow through the $PM_{2.5}$ impactor well and filter holder.

(continued)

sampler at the end of a run, an outline or checklist to follow is given in Figure 3-3.

Table 3-1. Field QC/QA Checks

Requirement[a]	Frequency	Acceptance criteria	CFR reference	2.12 reference	Information provided
Calibration standards					
Flow rate (FR) transfer standard	1/yr	±2% of NIST-traceable standard	Part 50, App. L, Sec 9.1, 9.2 Not described	Sec 6.3.3	Certification of traceability
Field thermometer	1/yr	±0.1 °C resolution ±0.5 °C accuracy	Not described	Sec 4.2.2 and 8.3.2.1	Certification of traceability
Field barometer	1/yr	±1 mmHg resolution ±5 mmHg accuracy		"	Certification of traceability
Calibration/verification					
FR calibration	If multipoint failure	±2% of transfer std	Part 50, App L, Sec 9.2	Sec 6.3	Calibration drift and memory effects
FR multpoint verification	Per manual, NLT 1/yr	±2% of transfer std	Part 50, App L, Sec 9.1, 2	Sec 6.3 and 8.3	Calibration drift and memory effects
One-point FR verification	1/4 weeks	±4% of transfer std	Part 50, App L, Sec 9.2.5		
External leak check	Every 5 sampling events	80 mL/min	Part 50, App L, Sec 7.4	"	Sampler function
Internal leak check	Every 5 sampling events	80 mL/min	"	"	Sampler function
Temp multipoint verification	On installation, then 1/yr	±2 °C	Part 50, App L, Sec 9.3	Sec 6.4	Calibration drift and memory effects
One-point temp. verification	1/4 weeks	±4 °C	Part 50, App L, Sec 9.3	Sec 6.4 and 8.2	Calibration drift and memory effects
Pressure calibration	On installation, then 1/yr	±10 mmHg	"	Sec 6.5	Calibration drift and memory effects
Pressure verification	1/4 weeks	±10 mmHg	"	Sec 8.2	Calibration drift and memory effects
Clock/timer verification	1/4 weeks	1 min/mo	Part 50, App L, Sec 7.4	Not described	Verification to ensure proper function
Blanks					
Field blanks	approximately 10%	± 30 μg	Part 50, App L, Sec. 8.3.7.1	Sec 7.7	Measurement system contamination
Precision checks					
Collocated samplers	Every 6 days	CV≤10%	Part 58, App A, Sec 3.5, 5.5	Sec 10.2.2	Measurement system precision
Accuracy					
FR audit	1/2 wk (automated) 1/3 mo (manual)	±4% of audit standard	Part 58, App A, Sec 3.5.1	Sec 10.2.3	Instrument bias/accuracy
External leak check	4/yr	<80 mL/min		Sec 6.6	Sampler function
Internal leak check	4/yr	<80 mL/min	Not described	Sec 6.6	Sampler function
Temperature check	4/yr	±2 °C	Not described	Sec 8.3	Calibration drift and memory effects
Pressure check	4/yr	±10 mm Hg	Not described	Sec 8.3	Calibration drift and memory effects
Audits (external assessments)					
FRM performance eval.	25% of sites 4/yr	±10%	Part 58, App A, Sec.3.5.3	Sec 10.2.3	Measurement system bias
External leak check	1/yr or as required	<80 mL/min	Not described	Sec 6.6.1	Sampler function
Internal leak check	1/yr or as required	<80 mL/min	Not described	Sec 6.6.2	Sampler function
Temperature audit	1/yr	±2 °C	Not described	Sec 10.2.5	Calibration drift and memory effects
Pressure audit	1/yr	±10 mmHg	Not described	Sec 10.2.5	Calibration drift and memory effects

[a]Requirements in bold/ italics require a change in the CFR that is in process.

(continued)

Table 3-2. Laboratory QC/QA Checks

Requirement	Frequency	Acceptance criteria	CFR, 2.12 reference	Information provided
Blanks				
Lot blanks	Once (9 filters/lot; 3 boxes, 3/box)	Less than 15 µg/wk difference	Part 50, App. L, Sec. 8.2 2.12, Sec. 7.7	Filter shipment stability; time to obtain stable weight for the lot
Lab blanks	Approximately 10%/weighing run	±15 µg difference	Part 50, App. L, Sec. 8.2 2.12, Sec. 7.7	Laboratory contamination
Calibration/verification				
Balance calibration	1/yr	Manufacturer's spec.	2.12, Sec. 7.2	Verification of equipment operation
Lab temp. calibration	3 mo	±2 °C	Quality assurance project plan (QAPP), Sec. 13/16	Verification of equipment operation
Lab humidity calibration	3 mo	±2%	QAPP, Sec. 13/16	Verification of equipment operation
Accuracy				
Balance audit	1/yr	±15 µg for unexposed filters	2.12, Sec. 10.2	Laboratory technician operation
Balance check	Beginning, every 10th sample, end	≤3 µg	2.12, Sec. 7.14	Balance accuracy/stability
Calibration standards				
Working mass standards	3-6 mo	25 µg	2.12, Sec. 4.3 and 7.3	Standards verification
Primary mass standards	1/yr	25 µg	"	Primary standards verification
Temperature standard	1/yr	±0.1°C resolution ±0.5°C accuracy	2.12, Sec.4.3.7 and 7.6	Standard verification (check of accuracy)
Relative Humidity std	1/yr	±2% RH accuracy, ±0.5%RH resolution	2.12, Sec. 4.3.7 and 7.6	Standard verification
Precision				
Replicate filter weighings	1 per weighing session	±15 µg difference	2.12, Table 7-1 QAPP, Sec. 13/16	Weighing repeatability/filter stability

I. Prepare for Site Visit on Scheduled Date/Time

Be sure to take the following equipment and supplies to each of the sites:

- Preweighed sampling filter(s) in cassette(s), packed in labeled containers. Spares.
- Preweighed field blank filters in cassettes, packed in labeled containers, if a field blank study is scheduled.
- $PM_{2.5}$ sampler run data sheet for each sampler. Use of electronic data sheets is encouraged. Add comments to the data sheets. Site notebook and calculator.
- Laptop computer (or alternative data storage device) and connecting cables to download sampler data.
- Spare parts and tools including O-rings, silicone grease, laboratory wipes, voltmeter.
- Operator's manual for the sampler(s) to be serviced.
- If it is time for the recommended every-fifth-sample-day checks, also take the following:
  - Ready-to-use impactor well assembly or filter/lab wipes/diffusion oil to service the sampler at the site

II. Install Filter/Cassette and Begin Sampler Operations

Note: If a filter is still in the sampler, follow the instructions for removing the sample/cassette. Refer to Part III. Also, if the schedule calls for any of the following procedures, perform them before installing a new sampling filter/cassette:

- Impactor well replacement or cleaning (after every fifth sampling event)
- Sampler flow verification check (every 4 weeks)
- Sampler ambient pressure and temperature checks (every 4 weeks)
- Sampler verification/calibration (temperature, pressure, flow rate)
- Cleaning of sampler inlet head and downtube (monthly)
- Leak check (after every fifth sampling event)
- Field blanks.

Perform the following steps to install the filter/cassette and begin sampler operations:

- Be sure the sampler is **not** operating.
- Fill in initial information on the data sheet.
- Remove the new filter/cassette from its protective container and visually inspect the filter/cassette for flaws. Verify that this is the correct filter for this sampler, site, and run date.
- Remove the sampler's filter holder assembly (if required by the manufacturer's instructions). Inspect the O-rings inside the filter holder; service them if necessary.
- Install the filter/cassette in the filter holder assembly and then install the loaded filter holder assembly in the sampler based on the manufacturer's instructions. If you touch or scratch the filter, void the filter, record this fact, and get another one from the set of extra filters brought to the site.
- Program the sampler to turn on at the beginning of a sampling period (consult the sampler's instruction manual). The sampling day begins at midnight.
- Make independent measurements of ambient temperature (T_a) and ambient pressure (P_a) using transfer standards. Record these values and the T_a and P_a values indicated by the sampler on the data sheet.

(continued)

Figure 3-3. Summary of $PM_{2.5}$ sampling procedures.

III. Remove Filter/Cassette and End Sampler Operations

Perform the following steps to remove the filter/cassette and end sampler operations:

- Arrive at the site as soon as possible after the end of the sampling period. The filter/cassette must be removed within 96 hours after the collection period has ended.
- Determine P_a and T_a using transfer standards. Enter the values on the data sheet.
- Based on review of the data, record the stop time; total elapsed time; initial and final Q, Q_{avg}, and Q_{cv}; total volume sampled; T_a; P_a; and so on on the data sheet.
- After each completed run, download data from the sampler data port to a laptop or alternative data storage device.
- Open the filter holder assembly (consult the sampler's instruction manual); remove the used filter/cassette; quickly visually inspect the filter for tears, oil, insects, moisture, and so on; and record your observations on the data sheet.
- Place the filter/cassette inside a properly labeled protective container. Verify the container's label versus the site name, date, and so on.
- Place the container inside a cooled storage chest. Do not allow the protective container to come into contact with ice or water. Sealed cooling blocks are recommended. Protect the containers from condensed water.
- Inspect the interior of the filter housing. Note any abnormalities.
- Inspect the interior of the impactor housing and the exterior of the impactor well. Remove any moisture or dust with a lint-free wipe and make notes on the data sheet.
- If another sampling run is to begin, insert a new filter/cassette in the filter holder assembly and set up the sampler for the next run.
- Review the recorded data for start and end times, sample elapsed time, flow rate, filter quality, and temperature to start the process of determining if the sample is valid, questionable, or invalid. Scan through the sampling summary on the sampler display and note flags. Record observations and reasoning for questioning or invalidating a run on the data sheet.
- Make a final check of the site, and observe and record the presence of any activity that may have affected the particulate loading of the sample.
- Keep the container holding the filter/cassette at a temperature below 25 °C (preferably cooled to 4 °C), and promptly deliver or ship it and the data sheet (with comments) to the sample custodian or balance operator in the weighing laboratory.

Figure 3-3 (continued)

4.0 Procurement of Equipment and Supplies

4.1 Overview

The establishment of an ambient $PM_{2.5}$ air monitoring network requires the procurement of specialized equipment and supplies for field operations and subsequent laboratory determination of particle mass. Information in this section will assist reporting organizations and States in selecting the proper equipment and in acceptance testing that equipment. Section 4.2 describes field operation equipment (excluding sampling filters) and Section 4.3 describes laboratory equipment (including sampling filters). Note that sampling filters are described in Section 4.3 because they are purchased for the laboratory, which must equilibrate and weigh them before field use. In addition to field operations and laboratory equipment, data handling system(s) (including forms, logs, files, and reporting procedures) should be developed and implemented. Information on data handling systems is provided in Section 12.0, "Data and Records Management."

Minimum monitoring equipment requirements and budgetary limits should be established before equipment is purchased. In addition, acceptance criteria for equipment and supplies should be established. Upon receipt of the sampling equipment and supplies, these acceptance checks should be conducted. The results of these checks, including whether the equipment was accepted or rejected, should be recorded in a procurement log. Figure 4-1 is an example of such a log. This log will serve as a permanent record for procurement and provide cost projections for future programs. Table 4-1 lists the major equipment needed, how it should be tested, suggested acceptance limits, and actions to be taken if acceptance limits are not met.

It is impossible to include every item that might be needed by any specific monitoring network. Therefore, each agency should determine the extent of its in-house inventory and the items that should be ordered before sampling can begin. The agency should also be prepared to order any additional equipment required in addition to that outlined in this section.

Item	Description	Qty	PO #	Vendor	Date		Cost	Initials	Accept/ Reject	Comments
					Ord.	Rec'd.				
1 case filters	2 µm pore 46.2 mm diameter	60	971-100	WIZ Supply	8/1/97	8/15/97	$100	ABC	Accept	Examined 8/20/97

Figure 4-1. Example procurement log.

Table 4-1. Acceptance Checks and Limits for Procurement of Equipment and Supplies

Equipment	Acceptance check	Acceptance limits	Action if requirements are not met
Field operations			
Sampler	Sampler and accessories complete; no evidence of damage. Model designated as reference or equivalent method. Pump and display work.	Specifications outlined in 40 *Code of Federal Regulation* (CFR) Part 50, Appendix L	Reject sampler
Calibration quality assurance/quality control (QA/QC) equipment for flow rate, temperature, pressure	Accompanied by certificate. Check values against National Institute of Standards and Technology (NIST)-traceable standards.	Within accuracy limits described in this document	Adjust or reject equipment
Audit equipment	Same as for calibration equipment but must not be the same equipment.	Within accuracy limits described in this document	Adjust or reject equipment
Laboratory operations			
Filters, Teflon®	Of correct type and undamaged.	Type as described in 40 CFR Part 50, Appendix L	Reject filters
Filter cassettes	Of correct type and undamaged.	As specified by sampler manufacturer	Reject filter cassettes
Filter/cassette protective containers	Of correct type and undamaged.	As described in this document	Reject protective containers
Filter-handling containers	Of correct type and undamaged.	As described in this document	Reject filter-handling containers
Analytical microbalance	Accompanied by certificate; check values against working standards.	Readability 1 µg, repeatability 1 µg	Adjust or reject equipment
Mass reference standards	Check working standards against NIST-traceable primary standards.	Tolerance ±25 µg	Reject standards

4.2 Procurement Prerequisites—Field Operations

4.2.1 Reference or Equivalent Method Sampler

Each $PM_{2.5}$ sampler used for reporting data to determine attainment of the National Ambient Air Quality Standard (NAAQS) for fine (2.5 µm) particulate matter **must** meet U.S. EPA standards and **must** be of a model designated by EPA as a reference or equivalent method. The minimum

sampler requirements are described in the reference method (EPA 1997a) and in 40 CFR Part 53 (EPA 1997b). The $PM_{2.5}$ sampler cost will vary with the manufacturer and the sophistication of the sampler. Basic considerations for sampler selection include flow control and measurement systems, maintenance requirements, reliability, ease of operation, and such additional capabilities as sequential sampling and downloading data.

Although a network may decide to use any number of different reference and designated equivalent $PM_{2.5}$ monitor models, using a single model of sampler in a network minimizes the variety of spare parts required to keep the network in operation, simplifies training of operators, and adds consistency to the data reduction process. An in-house inventory of general maintenance supplies and replacement parts is recommended. Examples include: various hand tools, laboratory wipes, soft brushes, and cotton swabs. Spare parts for the sampler may be obtained from the manufacturer or may be purchased from other suppliers.

The impactor requires a circular, 35- to 37-mm-diameter filter made of borosilicate glass with no binder. The filter pore size must be 1 to 1.5 µm and the thickness must be 300 to 500 µm. The impactor oil is tetramethyltetraphenyl-trisiloxane, single-compound diffusion oil, with the following specifications at 25 °C: vapor pressure, 2×10^{-8} mmHg; viscosity, 36 to 40 centistokes; and density, 1.06 to 1.07 g/cm^3.

4.2.2 Calibration Equipment

Specialized equipment is needed to calibrate the sampler for temperature, barometric pressure, and volumetric flow measurements. At a minimum, the following equipment should be procured:

- A thermometer(s) capable of measuring ambient temperatures in a range of -30 to +45 °C, readable to the nearest 0.1 °C. This thermometer should be referenced (ASTM 1992; EPA 1995; NIST 1986, 1988, 1989) to within an accuracy of ±0.5 °C to NIST-traceable American Society for Testing and Materials (ASTM) precision thermometers (e.g., ASTM numbers 62C, 63C, and 64C) once a year (ASTM 1995a). Multiple thermometers may be used to cover the temperature range as long as each thermometer meets the accuracy and readability specifications described above. Thermistor or thermocouple thermometers for use in the field should be calibrated against NIST-traceable thermometers. Some flexibility in these recommendations applies at sites where temperatures are extremely cold.
- A barometer capable of measuring barometric pressure (ASTM 1995b) over a range of 600 to 800 mm Hg (80 to 106 kiloPascals [kPa]) and readable to the nearest 1 mmHg. At least once a year, this barometer should be calibrated to within ±5 mmHg of a NIST-traceable barometer of known accuracy. A portable, aneroid barometer (e.g., a climber's or engineer's altimeter) is suitable for field use. A Fortin-type, mercury-column barometer may also be useful for laboratory checks of the barometer used for field measurements.
- Flow rate measurement equipment (transfer standards) capable of calibrating or verifying the sampler's flow rate measurement device with an accuracy of ±2 percent. This flow rate standard must be a separate, stand-alone device. It must have its own certification and be traceable to a NIST primary standard for volume or flow rate. A variety of flow rate transfer standards, with their optimum flow ranges and their support equipment, are presented in Section 6.3.2.

- A flow rate measurement adapter of the dimensions specified in drawing No. L-30 in Appendix L of 40 CFR Part 50 (EPA 1997a) and described in Section 7.3.6, Appendix L, that will connect the transfer standard outlet to the $PM_{2.5}$ sampler flow path entering the impactor assembly and form a leak-free seal. All interconnecting tubing should be flexible and crimp-resistant. This adapter is also used in conducting the required external leak test.

4.2.3 Flow Verification Check Device

As part of the quality control (QC) procedures, a flow verification check device is required to verify that the $PM_{2.5}$ sampler is operating at the correct flow rate. Figure 4-2 shows the construction details for an inexpensive and rugged QC flow verification check device that is based on measurement of the pressure drop across an orifice. This device is intended for use with a water manometer or other differential pressure meter that reads in inches of water. **Note**: Proper calibration of the orifice should be conducted in order to accurately predict the device's response to variations in ambient temperature and pressure. Orifices may be calibrated using a NIST-traceable soap-bubble flowmeter of appropriate range (Nelson 1992) or other suitable NIST-traceable volumetric or flow rate standard. Other calibrated volumetric flow rate devices such as the flow rate transfer standards described in Section 6.3.2 may also be used to check flow rates during routine operation.

4.2.4 Audit Equipment

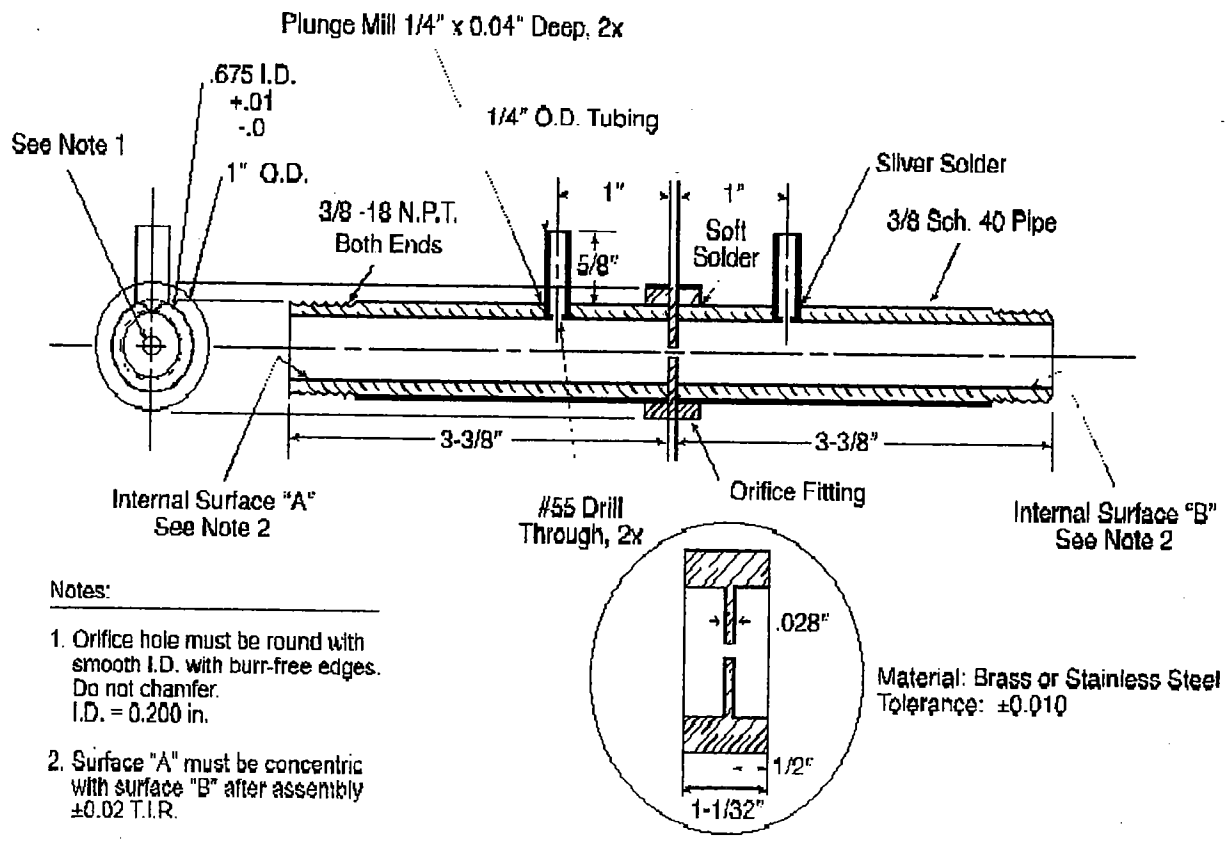

Figure 4-2. Orifice dimensions to provide approximately 1 in. of water pressure drop at 16.7 L/min. (all dimensions in inches).

Audit equipment should be similar to the calibration equipment described above. However, all audit equipment must not be the same equipment used for calibration and flow verification checks, although both sets of equipment may be of identical makes and models (see 40 CFR Part 58, Appendix A, Section 3.5.1.2). However, the calibration equipment and the audit equipment must be referenced to the same NIST primary standard for volume or flow rate.

4.3 Procurement Prerequisites—Laboratory Operations

4.3.1 Filter Media

In the laboratory, sampler filters are conditioned (while in glass or plastic filter-handling containers such as petri dishes or petri slides), preweighed, and placed first into sample filter cassettes and then into protective containers for transport to the field. The mean relative humidity (RH) in the microbalance environment and/or the conditioning chamber should be held between 30 and 40 percent, with a variability of not more than ±5 percent RH over 24 hours. However, where it can be shown that the mean ambient RH during sampling is less than 30 percent, conditioning is permissible at a mean RH within ±5 percent RH of the mean ambient RH, but in no case at an RH less than 20 percent. Mean laboratory temperature should be held between 20 and 23 °C, with a variability of not more than ±2 °C over 24 hours. The time required for new filter weights to stabilize (see Section 7.6) may be as long as 6 weeks to eliminate initial outgassing. Adequate numbers of filters should be purchased to permit conditioning before use. In addition, it is recommended that a sufficient inventory of more than one production lot of filters be maintained (in case problems are found with a particular lot). In practice, this suggestion means that networks should plan on keeping a minimum filter inventory sufficient for 6 to 12 weeks of operational needs. These inventory levels can be adjusted based on the network's experience with filter weight stabilization times for a given vendor's filters. The EPA filter procurement vendor will address the issue of FRM users need to precondition filters before weighing. This action should should lessen the preuse conditioning time significantly, to approximately the required minimum 24 hours. EPA-purchased Teflon® filters will be acceptance-tested prior to distribution to State or local agencies. However, filters should be inspected for obvious flaws (see Section 7.5). Conditioning for outgassing will still be necessary to determine the time, in excess of the 24 hours, needed to obtain a stable weight.

Only sampling filter media that meet the following EPA specifications for use with $PM_{2.5}$ samplers should be purchased. The **manufacturer** must certify that these media meet the specifications given in Appendix L of 40 CFR Part 50 (EPA 1997a).

- Size—circular, 46.2-mm diameter ±0.25 mm (with support ring)
- Medium—polytetrafluoroethylene (PTFE) Teflon® with integral support ring
- Support ring—polymethylpentene (PMP) or equivalent inert material, 0.38 ± 0.04 mm thickness, outer diameter 46.2 ± 0.25 mm, and width of 3.68 mm. The support ring diameter should also be checked for consistency. Variations in diameter will affect the filter exposure area, which, in turn, will affect any operations that involve use of a portion of the filter.
- Pore size—2 μm as measured by ASTM F 316-94
- Thickness—30 to 50 μm

- Maximum pressure drop (clean filter)—30 cm H_2O column at 16.67 L/min clean air flow
- Maximum moisture pickup—No more than 10 µg weight increase after a 24-hour exposure to air at 40 percent RH, relative to the weight after a 24-hour exposure to air at 35 percent RH
- Collection efficiency—greater than 99.7 percent, as measured by the dioctyl phthalate (DOP) test (ASTM 1995c) with 0.3-µm particles at the sampler's operating face velocity
- Filter weight stability (including test for loose, surface-particle contamination and test for temperature stability)—filter weight loss ≤20 µg in either test, measured as specified in 40 CFR Part 50, Appendix L, Section 6.9
- Alkalinity—less than 25 microequivalents/g of filter, as measured in a procedure based on the one given in Appendix A to this document.

Although not required for determination of $PM_{2.5}$ mass concentration under this reference method, additional specifications for the filter should be developed by users who intend to subject archived $PM_{2.5}$ filter samples to subsequent chemical analysis. These supplemental specifications include background chemical contamination of the filter and any other filter parameters that may be required by the chemical analysis method. All such supplemental filter specifications should be compatible with and secondary to the primary filter specifications given in Appendix L of 40 CFR Part 50 (EPA 1997a).

4.3.2 Filter Support Cassettes

Most $PM_{2.5}$ samplers use filter support cassettes (see Figure 7-3 and 40 CFR Part 50, Appendix L) to hold the sampling filter while in use. Cassette designs may vary slightly for different model samplers and so may not be interchangeable from one sampler model to another. They should be purchased only from the sampler manufacturer or other source approved by the sampler manufacturer. The filters are placed into these cassettes in the laboratory. Filter support cassettes should be uniquely identified. The cassettes, with the filters in place, are then transported to the field in protective containers (see Section 4.3.3). A sufficient number of cassettes should be purchased to allow all placement and removal of filters in cassettes to be performed in the laboratory. Under no circumstances should filters be placed in or removed from the filter support cassettes in the field.

4.3.3 Filter Cassette Protective Containers

Filter cassettes should be transported between the laboratory and the field in protective containers, as illustrated in Figure 7-3. Suitable containers should be available from the manufacturer or from a supplier specified by the manufacturer. Containers should be designed to protect the cassette and prevent it from moving within the container during transport. Containers should be fabricated from materials that have been demonstrated not to cause a static charge buildup. Use of static-proof bags should be investigated. To avoid losses of particulate matter, do not allow the surface of the filter to touch any interior surfaces of the protective container. Containers should be marked for identification purposes. Special, sampler-specific protective containers are needed for the trays or cartridges that hold multiple filters for use in sequential samplers. Consult the sampler or cassette manufacturer for details and availability. If reuse of the

containers is desired, a cleaning procedure that does not cause further contamination or degradation of the container should be developed.

4.3.4 Insulated Shipping Container

An insulated shipping container, capable of maintaining a temperature below 25 °C, is needed to transport the filter cassette containers between the field and laboratory after sampling. Plastic coolers, such as those used by campers and fishers, filled with leak-proof ice substitutes have proven suitable for this use. The sample cassette temperature should be monitored from the time of collection until the sample is equilibrated (i.e., during shipping and handling). Monitoring can be done by placing an inexpensive electronic max-min thermometer in the shipping container for each leg of the trip to the laboratory.

4.3.5 Filter Handling Containers

Filter media (particularly the 46.2-mm-diameter [1.85-in], 2-µm pore-size filter specified for use with reference or Class I equivalent samplers) are especially delicate and easily damaged. Post-sampling particle loss and filter damage may occur if proper handling procedures are not followed.

To ensure the integrity of the sample, some type of protective covering is required for filter handling and conditioning within the laboratory. A glass or plastic petri dish or petri slide, designed to hold these filters, is recommended. These are available from some filter manufacturers and laboratory supply houses. The dish should be of suitable size (i.e., large enough to allow easy removal of the filter, yet small enough to prevent excessive movement within the container) and should have a tight-fitting lid to prevent intrusion of dust or loss of particles during handling at the analytical laboratory. A label should be affixed to the container to provide proper documentation. A sufficient number of containers should be available to store filters during laboratory operations.

4.3.6 Analytical Microbalance

An analytical microbalance is required to weigh the sample filters. Its capacity should be adequate to weigh the sample filters (typically 100 to 200 mg). It must have sufficient room to weigh the type and size of filters used (i.e., 46.2-mm diameter). The microbalance must have a minimum readability of ±1 µg and should have a repeatability of 1 µg. Readability is the smallest difference between two measured values that can be displayed by the microbalance. Repeatability is a measure of the ability of a microbalance to display the same result in repetitive measurements of the same weight under the same measurement conditions. **Note**: The precision of mass measurements for unexposed filters based on replicate weighings will be greater than the microbalance's repeatability. The balance must be calibrated at installation and checked immediately before each weighing session. Electrostatic charge buildup may need to be neutralized in the microbalance's weighing chamber and on individual filters. Refer to Section 7.8 and the balance manufacturer's instruction manual and technical notes. Using microbalances with optional data input and output capabilities and automatic tare capabilities is recommended to reduce potential data entry errors and the time required to weigh a given filter.

4.3.7 Calibration Reference Standards

- Mass Reference Standards - Mass reference standards (or balance check weights) should be used to verify proper microbalance operation as part of normal QC operations. These standards should be ASTM Class 1 or 1.1, traceable to NIST with an individual tolerance of no more than 0.025 mg (ASTM 1993b). The mass reference standards should be selected so as to bracket the maximum and minimum expected filter weights (e.g., 100 to 200 mg, given that the mass range of a typical 46.2-mm filter is from 110 to 160 mg). Also, some microbalance designs only require calibration at their full scale weight; therefore purchase of a mass reference standard at that weight should also be considered to verify full scale calibration. For the same reasons, consult microbalance manufacturer, and if possible, manufacturer's microbalance operating instructions. Mass reference standards should be recertified on a regular basis (e.g., yearly) at a State weight and measures laboratory or at another laboratory that is accredited by the National Voluntary Laboratory Accreditation Program (NVLAP), which is administered by NIST (Harris 1994; White 1997). See Table 4-2 for specifications for a 200-mg mass reference standard.

Table 4-2. Specifications for 200-mg Mass Reference Standard

ASTM Class	Individual weight tolerance (mg)	Approximate cost ($) [a]
1	0.010	42
1.1	0.005	—
2	0.025	23

[a] Costs may be $30 (or more) higher for individual weights with a NVLAP traceable certificate or a NVLAP weight calibration report. Weights that include these certificates are traceable to NIST.

- Thermometer Standard - Use standard capable of measuring in the range of at least 18 to 25°C, readable to the nearest 0.1°C, and accurate to within 2°C.
- Relative Humidity Standard- Use standard capable of measuring in the range of 20 to 50% RH, readable to the nearest 0.5% RH, and accurate to within 2% RH.

5.0 Installation

5.1 Siting Requirements

As with any type of air monitoring study in which the sample data are used to draw conclusions about a geographic area, the validity of those conclusions depends on the representativeness of the sampling data. Therefore, an initial goal of a $PM_{2.5}$ monitoring project is to select a safe and secure site where the $PM_{2.5}$ measurements will be representative of the monitoring objectives for that site.

5.1.1 Spatial and Temporal Scales of Site

Spatial and temporal scale considerations are important in $PM_{2.5}$ sampler siting. Spatial scales may range from a small (0.1- to 0.5-km^2) area to large regional areas exceeding thousands of square km. Whether the potential impact of particulate pollution is generated by a local or general source category affects the size of the spatial monitoring scale. In addition, the siting of the samplers within a monitoring network should reflect whether the expected impact will be limited to a small area (a few city blocks) or will extend to larger areas (metropolitan or rural). For temporal scale, most interest focuses on either an annual geometric mean concentration or a 24-hour average concentration. Because siting of a $PM_{2.5}$ sampler requires considering the prevailing wind direction, a sampler sited for monitoring trends in air quality over a period of a year is not necessarily ideal for measuring 24-hour concentrations. Thus, the choice of temporal scale also affects the sampler location. These spatial and temporal aspects of network design and optimum site exposure are more completely explained in 40 CFR Part 58, Appendix D (EPA 1997a) and in the guidance document for network design and optimum site exposure for $PM_{2.5}$ and PM_{10} published by the U.S. EPA Office of Air Quality Planning and Standards (OAQPS) (EPA 1997b).

5.1.2 Sampler Location

Although spatial and temporal scales must be considered in site selection, the following sampler location guidelines should be observed regardless of the scale:

- The $PM_{2.5}$ sampler must have unobstructed air flow for a minimum of 2 m in all directions. Be sure to provide sufficient area for a collocated Federal Reference Method (FRM) sampler and for installation of a portable FRM performance evaluation (PE) sampler.
- The sampler inlet should be placed at a height of 2 to 15 m above ground level.
- If a $PM_{2.5}$ sampler is collocated with any other particulate matter sampler, the spacing between sampler inlets must be ≥ 1 m for other $PM_{2.5}$ samplers (or samplers with flow rates <16.67 L/min) and ≥ 2 m for total suspended particulate (TSP) type samplers (or samplers >16.67 L/min). In either case, the spacing between inlets must be no more than 4 m. The heights of the inlets should be within 1 m as measured in the vertical direction.

5.1.3 Safety

A $PM_{2.5}$ sampler used for routine sampling must be situated where the operator can reach it safely regardless of weather conditions. If the sampler is located on a rooftop, care should be

taken that the operator's personal safety is not jeopardized by a slippery roof surface during inclement weather. Consideration also should be given to the fact that routine operation (i.e., calibrations, sample filter installation and recovery, flow checks, and audits) involves transporting supplies and equipment to and from the monitoring site.

5.1.4 Electrical Considerations

In 40 CFR Part 50 Appendix L (EPA 1997c), a $PM_{2.5}$ sampler is required to operate at 105 to 125 volts alternating current (AC) and a frequency of 59-61 hertz (Hz). The sampler may draw a higher current when the pump starts, possibly necessitating a slow-blow fuse. Although $PM_{2.5}$ samplers are required to indicate power interruptions, every effort should be made to provide a stable power source for the monitoring site. The site should be able to provide sufficient power for the primary sampler, a collocated sampler, and an FRM PE sampler.

5.1.5 Security

The security of the sampler itself depends largely on its location. Rooftop sites with locked access and ground-level sites with fences are common. Fences should be of chain-link or similar construction so as not to impede air flow across the site. The inlet of the sampler should extend above the top of the fence. In all cases, the security of the operating personnel as well as the sampler should be considered.

5.2 Sampler Installation Procedures

5.2.1 Receipt of Sampler

- Establish an individual logbook for each sampler received.
- On receipt of a $PM_{2.5}$ sampler from the manufacturer, visually inspect the sampler to ensure that all components are accounted for.
- Compare the equipment delivered with the items listed on the enclosed packing slip. Notify the manufacturer immediately of any missing or damaged equipment.
- Read the manufacturer's instruction manual and become familiar with the sampler's operating and calibration procedures.
- Assemble the sampler in the laboratory according to the manufacturer's instructions, except do not put oil in the impactor well.

5.2.2 Laboratory Evaluation

The following activities can most conveniently take place in an indoor, laboratory environment. Field measurements personnel, not laboratory personnel, should conduct these tests.

- Energize the sampler. Check to be sure that the pump, mechanical components, and electronic displays are working.
- Perform a leak check according to the manufacturer's instructions. Each sampler's procedure will be somewhat different from the others. The impactor should not have oil in it, and a flow check filter should be placed in the filter cassette for this test.

- Check the flow rate at 16.67 L/min and at ±10 percent of this value according to the manufacturer's instructions and Section 6.0, "Calibration Procedures."
- Perform checks of the temperature and pressure sensors.
- Perform a flow verification check according to the manufacturer's instructions and Section 8.3.2.
- For sequential samplers, check that the timing and sequencing functions work properly.
- If this is the first sampler model of its type received, conduct data downloading exercises to become familiar with the process. If it is a sequential sampler, operate it for at least 3 consecutive days to test the system.
- If oil has been added to the impactor well during any of the laboratory tests, remove it before transit to the field site.

5.2.3 Setup at Sampling Site

- Carefully transport the sampler to the sampling site.
- Secure the sampler in its predetermined location. The legs of the sampler can be bolted to angle aluminum bars. The bars can be held in the soil with metal stakes or they can be nailed to wooden beams if the sampler is on the surface of a roof. Keep the sampler level. Allow space for installation of a collocated sampler and/or an FRM PE sampler.

5.2.4 Field Evaluation

- Check all tubing for cleanliness, crimps, cracks, or breaks.
- Plug the power cord into a line voltage outlet. The use of waterproof interlocking electrical connectors is recommended to ensure operator safety and to avoid shorts and/or power interruptions. Do not allow any electrical connections to become submerged during periods of inclement weather.
- Perform a leak test with a filter in the filter cassette. Do not use the filter for subsequent sampling.
- Allow the system to run and equilibrate to ambient conditions for approximately 15 min.
- Perform checks of the temperature and pressure sensors.
- Perform a flow rate verification check according to the manufacturer's instructions.
- Correct any problems before proceeding. The sampler is now ready for routine use.

6.0 Calibration Procedures

6.1 Overview

Before a $PM_{2.5}$ monitoring program is undertaken, all sampling and analysis equipment must be properly calibrated. Careful, accurate calibrations of sampling instrumentation and associated equipment are fundamental for any monitoring network. The suggestions and requirements specified in this section may serve as initial acceptance checks; further checks may be necessary if acceptance specifications are not met. All data and calculations should be recorded in a calibration logbook or on calibration data sheets. A separate logbook or a separate section of a logbook should be used for each apparatus and sampler in the program. Once the initial calibration of a PM 2.5 sampler's sensors is established, a schedule of field performance checks should be maintained to verify that the sensor calibration has not changed. Note that the calibration verification activity includes first determining if the sensor reading is still within the acceptance limits of the calibration. Only if the sampler sensor reading is not acceptable would a mathematical or instrumental adjustment be made. Whenever field performance checks of the sampler's flow rate, external or internal leakage rate, temperature, or pressure systems show out-of-tolerance conditions, the operator is cautioned to double-check the equipment, the connections, and the sampler before proceeding with recalibration. It is possible that the sampler is not out of calibration and considerable time and effort could be spent unnecessarily.

According to 40 CFR Part 50, Appendix L, Subsection 10 (EPA 1997), the $PM_{2.5}$ sampler flow rate measurement system must be calibrated in terms of the actual volumetric flow rate, (Q_a), at prevailing ambient conditions of temperature and pressure, as opposed to the standard volumetric flow rate (Q_{std}), which is measured or corrected to U.S. EPA-standard conditions of temperature and pressure. The flow rate measurement system consists of a dry gas meter or other flow sensor, a temperature sensor, a pressure sensor, and associated devices which, as needed, make control adjustments to maintain the set point of the volumetric flow rate in response to variations in temperature and pressure. Refer to the operating manual for your $PM_{2.5}$ sampler for specific instructions on how to enter calibration data using the keypad and how to make other adjustments. Measured $PM_{2.5}$ concentrations are also reported in terms of the actual volume at ambient conditions of temperature and pressure. Therefore, no conversions between Q_a and Q_{std} are generally necessary. However, if the calibration for your flow rate standard or transfer standard is expressed in terms of Q_{std}, conversion to Q_a is required. The calculations necessary to convert these flow rates are presented in Section 6.2, Equations (6-1) and (6-2).

This section presents the following aspects of calibration procedures:

- A discussion of Q_a and Q_{std} flow rate designations and their applicability in a $PM_{2.5}$ monitoring program (Section 6.2)
- Basic calibration procedures and associated calculations for calibration of the sampler's flow rate measurement system (Section 6.3)
- Discussion of flow rate transfer standards and calibration equipment (Sections 6.3.2 and 6.3.3)

- Basic calibration procedures for the sampler's temperature and pressure measurement systems (Sections 6.4 and 6.5)
- Procedures for conducting external and internal leak checks (Section 6.6)
- Sampler calibration frequency requirements (Section 6.7).

More detailed information on calibration and operation procedures can be found in each sampler manufacturer's operating instruction manual. These instruction manuals are a required part of the manufacturer's application for designation as an EPA Reference or Equivalent Method and as such have been reviewed and accepted for their designated sampler.

6.2 General Aspects of Flow Rate Measurement and $PM_{2.5}$ Sampler Calibration

As discussed in Section 3.0, "Summary," a reference or Class I equivalent $PM_{2.5}$ sampler includes a specially designed sample air inlet, a size-fractionating impactor, and a sample flow rate control system. The particle-size discrimination characteristics of both the inlet and the impactor are critically dependent on specific internal air velocities; a change in velocity will result in a change in the nominal particle size collected. These velocities are determined by the actual volumetric flow rate (not the mass flow rate) through each device. Therefore, the actual volumetric flow rate through the sampler's inlet and fractionator must be maintained at a constant value that is as close as possible to the design flow rate specified for the sampler. The design flow rate for a given sampler is specified in the sampler's operation or instruction manual. Upper and lower tolerance limits for the sampler's flow rate are specified in 40 CFR Part 50, Appendix L.

As mentioned previously, the calibration of the sampler's flow rate measurement system must be performed in terms of actual volumetric units (Q_a or V_a). Results must be recorded in the same units. However, previous measurements for PM_{10} were based on standard units (Q_{std} or V_{std}); thus the certification for some calibration standards may be in terms of standard volumetric flow rate units (Q_{std}). Therefore, it is important to understand the definition for each of these two types of volumetric units and the distinction between them. Before calibration procedures are initiated, the operating agency personnel should review the following flow rate definitions:

- Q_a—Actual volumetric air flow rates that are measured and expressed at existing conditions of temperature and pressure are denoted by Q_a (Q_{actual}). Typical units are L/min and m^3/min. Inlet design flow rates for $PM_{2.5}$ samplers are always given in actual volumetric flow units.
- Q_{std}—Air flow rates that have been adjusted to EPA-standard conditions of temperature and pressure (25 °C or 298 K and 760 mmHg or 101 kPa) are denoted by Q_{std} ($Q_{standard}$). Typical units are L/min and m^3/min. Standard volume flow rates are often used by engineers and scientists because they are equivalent to mass flow rate units. Prior to 1997, standard volumes (derived from standard volume flow rates and the total time of sampling) were also required in the calculation of mass concentration (µg/m^3) in reporting PM_{10} measurements.

These Q_a and Q_{std} flow rate units must not be confused or interchanged. If necessary, the flow rate units can be converted, provided the temperature and pressure are known. The following conversion formulas can also be used for average flow rates ($\overline{Q_a}$ and $\overline{Q_{std}}$) over a sampling period by substituting average temperature ($\overline{T_a}$) and pressure ($\overline{P_a}$) over the sampling period.

$$Q_{std} = Q_a(P_a/P_{std})(T_{std}/T_a) \quad (6\text{-}1)$$

$$Q_a = Q_{std}(P_{std}/P_a)(T_a/T_{std}) \quad (6\text{-}2)$$

where

Q_{std} = standard volume flow rate, standard m^3/min
Q_a = actual volume flow rate, actual m^3/min
P_a = ambient barometric pressure, mmHg (or kPa)
P_{std} = EPA standard barometric pressure, 760 mmHg (or 101 kPa)
T_{std} = EPA standard temperature, 298 K (25 °C + 273)
T_a = ambient temperature, K (ambient °C + 273).

Any gas flow rate measured or expressed in actual volumetric units (Q_a) is always associated with a particular temperature and pressure of the gas. If either the temperature or the pressure changes, the volumetric flow rate will also change, even though the mass flow rate of the gas remains constant. Therefore, when the flow rate is measured at different locations in the sampler, the volumetric flow rate observed will be different if either the temperature or the pressure is different at the various locations. For example, when a flow calibration device is connected to the sampler inlet, the pressure of the air flow measured by the flow calibration standard will be the ambient barometric pressure. However, the pressure of the flowing air measured by the sampler's flow measurement system will be somewhat lower than the ambient barometric pressure because all flow calibration devices cause some pressure drop. If this pressure drop is negligible (<1 percent or <4 in of H_2O), then there is no problem; the pressure can be considered the same for both measurement systems. But if the pressure drop is significant (>1 percent or >4 in of H_2O), then the volumetric flow rate measured by the two systems will be different, and this difference should be taken into account when comparing them. **Sampler flow rate measurement systems may or may not automatically correct for this pressure change.** If not, one of the flow rate measurements must be corrected to the same pressure as the other flow rate before they can be compared. This correction is accomplished using the following formula:

$$Q_1 = Q_2 (P_2/P_1)(T_1/T_2) \qquad (6\text{-}3)$$

where

Q_1 = actual volume flow rate at the pressure and temperature at the first measurement point, m^3/min
Q_2 = actual volume flow rate at the second measurement point, m^3/min
P_1 = pressure at the first measurement point, mmHg (or kPa)
P_2 = pressure at the second measurement point, mmHg (or kPa)
T_1 = temperature at the first measurement point, K (°C + 273)
T_2 = temperature at the second measurement point, K (°C + 273).

Note: In many cases the temperatures will be identical, so that $T_1=T_2$ and the (T_1/T_2) term will equal 1.

6.3 Calibration of the Sampler Flow Rate Measurement System

A full, detailed, EPA-approved calibration procedure, tailored specifically to each commercially available $PM_{2.5}$ sampler, is contained in the operating or instruction manual associated with each sampler designated as a reference or equivalent method under 40 CFR Part 53. Follow that specific procedure carefully and thoroughly to calibrate the sampler.

CAUTION

Do not calibrate the flow rate measurement system if there is any doubt that the temperature and pressure measurement systems are not also in calibration. If there is doubt, calibrate the temperature and pressure sensors (refer to Sections 6.4 and 6.5) before calibrating the flow rate measurement system. Also check for internal and external leaks before proceeding (refer to Section 6.6).

This section provides additional precautions, guidance, and information on flow rate standards and calibration that may not be contained in the specific instruction manual procedure. It also presents a generic outline of the general procedure used to calibrate the flow rate measurement systems of commercially available samplers. This information can be used to augment the sampler-specific procedures.

6.3.1 General Requirements and Guidance

1. Multipoint calibration and single-point verification of each sampler's flow rate must be performed periodically (see Section 6.7 for frequency) to establish traceability of subsequent flow rate measurements to an authoritative flow rate standard. Calibration with a flow rate standard (or a transfer standard) that is certified against a National Institute of Standards and Technology (NIST)-traceable standard (see Section 6.3.3 regarding NIST traceability) transfers the NIST traceability to the sampler's flow rate measurement system. This NIST traceability is required by Appendix A of 40 CFR Part 58.

2. $PM_{2.5}$ samplers may employ various types of flow rate measurement devices. The specific calibration standard and procedure used for calibration or verification of the sampler's flow rate measurement device will vary depending on the type of flow rate measurement system employed (40 CFR Part 50, Appendix L, Sec. 9.2.1). The sampler's operation or instruction manual identifies one or more types of flow rate or volume standards recommended for calibration and provides a detailed calibration procedure.

3. Calibration of the sampler's flow rate measurement system must be in units of the actual ambient volumetric flow rate (Q_a) (40 CFR Part 50, Appendix L, Sec. 9.2.1).

4. The sampler flow rate measurement system must be calibrated or verified by installing an unused filter in the filter holder, removing the sampler inlet, and connecting the flow rate adapter and flow rate standard to the sampler, in accordance with the instruction manual, so that the flow rate standard accurately measures the sampler's flow rate. The operator should verify that no leaks exist between the flow rate standard and the sampler (40 CFR Part 50, Appendix L, Sec. 9.2.3).

5. The calibration relationship between the flow rate (in actual L/min) indicated by the flow rate standard and by the sampler's flow rate measurement device must be established or verified in accordance with the sampler's operation or instruction manual. Temperature and pressure corrections may be required for some types of flow rate standards (40 CFR Part 50, Appendix L, Sec. 9.2.4). Consult the operations manual for the particular flow rate

standard for guidance on the nature and calculation of any corrections that may be required for the standard.

6. Monthly verification of the sampler's flow rate shall consist of one flow rate measurement at the sampler's operational flow rate (40 CFR Part 50, Appendix L, Sec. 9.2.4). This one-point verification of the flow rate measurement system may be substituted for a three-point calibration, provided that a full three-point calibration is performed upon initial installation of the sampler and at least once per year thereafter and the flow rate measurement system has met the ±2 percent accuracy requirement (40 CFR Part 50, Appendix L, Sec. 9.2.5) in the previous three-point calibration. A full three-point calibration must be carried out whenever a one-point verification indicates that the sampler's flow rate measurement system differs by ±4 percent or more from the flow rate measured by the flow rate standard. The one-point verification must be repeated after the three-point calibration as a double-check to ensure the sampler operates properly at the design flow rate of 16.67 L/min following the calibration (40 CFR Part 50, Appendix L, Sec. 9.2.5).

7. Calibration of the sampler's flow rate measurement system must consist of at least three separate flow rate measurements (a multipoint calibration) approximately evenly spaced within the range of -10 to +10 percent of the sampler's operational flow rate (40 CFR Part 50, Appendix L, Sec. 9.2.4). The sampler must have the capability to adjust the flow rate over the -10 to +10 percent range (40 CFR Part 50, Appendix L, Sec. 7.4.2). Calibration procedures for the various samplers call for the results of three different flow rates to be keyed in to establish the calibration. The sampler's instruction manual will provide additional guidance on flow rate adjustment.

8. Following a calibration or verification, the flow rate adapter and flow rate standard are disconnected from the sampler, and the sampler's inlet is carefully reinstalled. The clean filter remains in place. Then the sampler's normal operating flow rate must be determined (in L/min), using the sampler's flow rate measurement system. If the sampler flow rate differs by ±2 percent or more from the required operational value of 16.67 L/min, the sampler's flow rate must be adjusted to the specified flow rate (40 CFR Part 50, Appendix L, Sec. 9.2.6). The filter is then removed and the sampler is returned to service.

6.3.2 Flow Rate Calibration Standards

Flow rate standards used for calibrating or verifying the sampler's flow rate measurement device must have an accuracy of ±2 percent. This flow rate standard must be a separate, stand-alone device designed to connect to the flow rate measurement adapter. The flow rate standard must have its own certification and must be traceable to a NIST primary standard for volume or flow rate (40 CFR Part 50, Appendix L, Sec. 9.1.2). See Section 6.3.3 for more information on NIST traceability. Consult the technical literature and the vendor's descriptions of various flow rate standards and their performance under various weather conditions before making a decision to purchase one.

All flow rate calibration standards must be fully equilibrated to the temperature of the air whose flow rate is to be measured. This temperature equilibration can take up to an hour, depending on the temperature at which the standard was stored prior to moving it to the point of use. During this thermal equilibration period, the standard must be exposed to the prevailing air temperature,

but it also must be protected from precipitation, wind, dust, solar heating, and other conditions that could affect its accuracy.

Various types of flow rate standards that might be considered for sampler calibration follow:

- **Bubble flowmeters**—Although completely manually operated and timed bubble flowmeters are available, a semiautomatic instrument such as the Gilian* flowmeter is easier to use and is more likely to provide more uniform flow rate measurements. Because the liquid used to form the bubbles is usually water-based, a water-vapor correction may be required to compensate for a volume increase due to evaporation of the water in the instrument. Furthermore, the instrument cannot be used below 0 °C because the soap solution will freeze.

- **Piston flowmeters**—Automatic dry-piston flowmeters such as the BIOS* flowmeter are relatively easy to use and not subject to the water-vapor correction or the liquid freezing limitation of the bubble flowmeters. However, they may still be subject to a lower operational temperature limit.

- **Mass flowmeters**—Although mass flowmeters may be considered as calibration standards, they have a number of shortcomings in this application. They have a high pressure drop, which could change the sampler flow rate or otherwise affect the operation of the sampler. Mass flowmeters also require conversion of the measured mass flow rate to the actual volumetric flow rate for comparison to the $PM_{2.5}$ sampler's displayed value. The flow rate measured by the sampler may also have to be corrected to account for the significant pressure drop introduced by the mass flowmeter itself. Finally, mass flowmeters are subject to zero or span drift, particularly over the wide range of temperatures encountered at field sites, so their accuracy should be reverified frequently over a wide temperature range.

- **Orifice devices**—Orifice devices are simple and reliable, but they too require corrections for temperature and pressure and may have a significant pressure drop. They also require a very accurate and sensitive differential pressure measurement device such as a manometer or an aneroid differential pressure gauge, whose accuracy must be reverified frequently. Electronic micromanometers are convenient to use with an orifice device such as the one illustrated in Figure 4-2. Readings from electronic micromanometers should be cross-checked against a water manometer prior to a round of sampler verifications or calibrations.

- **Laminar flow elements**—Laminar flow elements generally have a lower pressure drop than orifice devices but otherwise have the same requirements and disadvantages.

- **Wet test meters**—Wet test meters are generally not practical for field use but may be used for laboratory calibrations.

- **Dry gas meters**—Dry gas meters may be considered for field calibration. Some meters may have a substantial pressure drop. They should be checked for leaks and mechanical problems and be recertified at least annually.

---

*Mention of commercial products should not be interpreted as endorsement. This product is given as a typical and perhaps well-known example of the general class of instruments; other instruments in the class are available and may be fully acceptable.

6.3.3 NIST Traceability and Certification of Flow Rate Standards

The flow rate standard used for flow rate calibration should have its own certification and should be traceable to other standards for volume or flow rate, standards that are themselves NIST-traceable. It is recommended that the "other standards" be either those of a commercial calibration laboratory or those primary standards maintained by the local agency, State, or EPA region. The greater the number of calibration steps needed to link a measurement to a NIST standard, the greater the degradation of quality of this type of traceability. Thus the "other standard" should be at least as accurate (or even more accurate) and stable as the flow rate standards to be made traceable and should be no more than two traceability steps removed from an actual NIST standard. A calibration relationship for the flow rate standard, such as an equation, curve, or family of curves, should be established that is accurate to within 2 percent over the expected range of ambient temperatures and pressures at which the flow rate standard is expected to be used. The flow rate standard must be recalibrated or reverified and recertified at least annually. Appendix 12 of EPA's *Quality Assurance Handbook for Air Pollution Measurement Systems, Volume II, Part I*, should be consulted for further information on the calibration of primary and secondary standards for flow measurements and the hierarchy of standards (EPA 1998).

The actual frequency with which this recertification process must be completed depends on the type of flow rate standard—some are likely to be much more stable than others. The best way to determine recertification requirements is to maintain a control chart (a running plot of the difference or percent difference between the flow rate standard and the NIST-traceable primary flow rate or volume standard) for all comparisons. In addition to providing excellent documentation of the certification of the standard, a control chart also gives a good indication of the stability of the standard. If the two standard deviation control limits are close together, the chart indicates that the standard is very stable and could be recertified less frequently. (The minimum recertification frequency is 1 year.) On the other hand, if the limits are wide, the chart would indicate a less stable standard that should be recertified more often. A particularly unstable standard may be unusable no matter how often it is recertified.

6.3.4 Outline of Generic Flow Rate Calibration Procedure

A fully detailed, EPA-approved flow rate calibration procedure, tailored specifically to each commercially available $PM_{2.5}$ sampler, is contained in the operations manual associated with each sampler that is designated as a reference or equivalent method under 40 CFR Part 53. Follow that sampler-specific procedure carefully and thoroughly, in conjunction with the guidance in this section, to calibrate the sampler. The following steps outline a general calibration procedure.

1. Before performing a flow rate calibration, make sure that the sampler temperature and pressure sensors are displaying reasonable readings (that is, they are calibrated).
2. Equilibrate the selected flow rate calibration device to ambient temperature conditions according to guidance provided in Section 6.3.2.
3. Install a filter cassette with an unused 46.2-mm filter in the sampler. This filter should meet all specifications for $PM_{2.5}$ sampling, but it does not need to be pre- or postweighed. This filter must not be used for sampling but can be used several more times for calibration

purposes, provided particulate loading on the filter is minimal.

4. Ensure that the sampler is operational and has warmed up. Depending on weather conditions, the sampler should run for a minimum of 10 to 15 min before starting the flow rate verification or calibration process. Check the flow rate display to assess stability.

5. Remove the inlet from the sampler. Place the flow calibration device on the sampler downtube using a flow adapter device if necessary. Ensure that any valves in the flow adapter are open so that flow through the sampler is unrestricted.

6. Place the sampler in calibration mode according to the instructions in the manufacturer's operating manual.

7. Follow the instructions in the manufacturer's operating manual for performing the multipoint flow calibration.

8. Once calibration is complete, turn off the sampler pump, remove the filter and filter cassette, remove the flow calibration device (and flow adapter device, if applicable), and replace the sampler inlet.

9. The sampler flow rate is now calibrated. Refer to Section 6.3.1 for the procedure for flow rate verification, which will be used until the next flow rate calibration.

6.4 Calibration of Sampler Temperature Sensors

A fully detailed, EPA-approved calibration procedure for temperature sensors, tailored specifically to each commercially available $PM_{2.5}$ sampler, is contained in the operating manual associated with each sampler that is designated as a reference or Class I equivalent method under 40 CFR Part 53. Follow these specific procedure(s) carefully and thoroughly to calibrate the sampler's temperature sensors. It is recommended that a three-point temperature calibration of each temperature sensor be performed each year and that a one-point check of the ambient air temperature sensor be made monthly.

This section provides additional precautions, guidance, and information on temperature standards and calibration that may not be contained in the specific instruction manual procedure. The section also presents a generic outline of the general procedure used for calibration of the temperature measurement systems of commercially available samplers. This information should be used to augment the specific instruction manual procedure.

6.4.1 General Requirements and Guidance

1. Multipoint (at least three temperature points) calibration followed by single-point verification of each sampler's temperature sensors must be performed annually to establish traceability of subsequent temperature measurements to an authoritative temperature standard. Calibration with a temperature standard that is traceable to a NIST-traceable primary standard (see Section 6.3.3 regarding NIST traceability) transfers the traceability to the sampler's temperature sensors. Because temperature affects the flow rate, NIST traceability of the sampler's temperature measurements is also required for flow rate measurement traceability.

2. $PM_{2.5}$ sampler manufacturers use various types of temperature sensors. The specific calibration standard and procedure used for calibration or verification of the sampler's temperature sensor may vary depending on the type of sensors used.

3. Multipoint calibration of the sampler's temperature measurement system must consist of at least three separate comparative temperature measurements approximately evenly spaced over the sampler's expected operational ambient temperature range. Both the ambient air and filter temperatures are monitored in order to assess filter temperature deviation from ambient temperature and to set a flag should the filter temperature rise more than 5 °C above ambient temperatures and stay there for 30 consecutive minutes.

4. Section 4.3.5 of the EPA *Quality Assurance Handbook for Air Pollution Measurement Systems, Volume IV: Meteorological Measurements* (EPA 1995) contains detailed guidance on calibration of temperature sensors and measurement systems (including a reference to the manufacturer's manual for adjustment of signal conditioning circuits), required calibration equipment, methods for calibrating the temperature, a discussion of ΔT calibrations, and an example of a calibration report.

5. Ideally, temperature calibration should occur in the field to assess temperature sensor responses as they occur in normal operation. However, climate conditions may make this difficult and removal of the sampler to an indoor location may be preferable. Usually, the sensor element is removed from the sampler and its connecting wires are left attached to the sampler. The space formerly occupied by the sensor should be plugged with a fitting to prevent any contamination of the sampling system and entry of ambient air.

6. Monthly verification of a sampler's temperature sensors responses should consist of one temperature measurement made at the sampler's current temperature reading. This one-point verification may be substituted for a three-point calibration, provided that a full three-point calibration is performed upon initial installation of the sampler and at least once per year thereafter and the temperature measurement system has met the ±2 °C accuracy requirement in the previous three-point calibration. A full three-point calibration must be performed whenever a one-point verification indicates that the sampler's temperature measurement system differs by ±4 °C or more from the temperature measured by the temperature standard. A one-point verification of the ambient temperature sensor should be done following the three-point calibration to ensure the sampler has returned to its normal operating conditions.

6.4.2 Temperature Calibration Standards

The operations manual associated with the sampler should identify one or more types of temperature standards recommended for calibration and provide a detailed calibration procedure for each type that is specifically designed for the particular sampler.

The EPA *Quality Assurance Handbook for Air Pollution Measurement Systems, Volume IV: Meteorological Measurements* (EPA 1995), Section 4.3.5.1, gives information on calibration equipment and methods for assessing response characteristics of temperature sensors. The ambient air and filter temperature sensors of a reference or Class I equivalent $PM_{2.5}$ sampler must have a resolution of 0.1 °C and an accuracy of ±2 °C over the range of -30 to 45 °C. The

handbook describes how to prepare three stable thermal mass assemblies whose temperatures can be determined to about 0.1 °C. The thermal mass assemblies can be as simple as insulated vacuum bottles (i.e., thermos bottles) containing pure water or ice, or they may be solid cylinders of aluminum metal. A good American Society for Testing and Materials (ASTM)- or NIST-traceable mercury-in-glass thermometer is also needed. The thermometer and the $PM_{2.5}$ sampler sensor are both immersed in the thermal mass and allowed to equilibrate; the temperature readings are then compared.

6.4.3 NIST Traceability and Certification of Temperature Standards

The temperature standard used for temperature calibration must have its own certification showing traceability to a NIST primary standard. A calibration relationship to the temperature standard (an equation or a curve) is established that is accurate to within 0.5 °C over the expected range of ambient temperatures at which the temperature standard will be used. The temperature standard must be reverified and recertified at least annually.

The actual frequency of recertification depends on the type of temperature standard; some are much more stable than others. The best way to determine recertification requirements is to maintain a control chart.

Additional reference sources concerning temperature measurements and calibration are: *Liquid-in-Glass Thermometry* (NIST 1976); *Thermometer Calibration: A Model for State Calibration Laboratories* (NIST 1986); *NIST Measurement Services: Liquid-in-Glass Thermometer Calibration Service* (NIST 1988); and *The Calibration of Thermocouples and Thermocouple Materials* (NIST 1989).

6.4.4 Outline of Generic Temperature Calibration Procedure

Both the ambient air and filter temperature sensors should be calibrated once per year. The ambient air sensor is located inside the shielded fixture on the outside of the $PM_{2.5}$ sampler and is easy to unfasten and remove for comparison to a transfer standard for temperature. It is possible to conduct the three-point calibration of the ambient sensor at the field site, although it may prove easier to remove the sampler to the laboratory to avoid weather problems and for convenience in preparing the temperature standards. On the other hand, the filter temperature sensor of reference or Class I equivalent $PM_{2.5}$ samplers is located in the open space just below the filter cassette. It is threaded through the wall of the filter assembly section of the sampler, and removal of plastic or metal fittings is required to remove the sensor and its associated wiring. It is recommended that this sensor be calibrated in the laboratory. (The temperature sensor housing, the sampler inlet, and the interior of the downtube can also be cleaned in the laboratory.) Be careful when removing the filter temperature sensor—do not gall the fittings because this could start an internal leak after installation. It is suggested that a sampler leak check be performed after reinstallation of the filter temperature sensor.

Several steps to follow in calibrating ambient air temperature sensors are given below. Make frequent reference to the operator's instruction manual for sampler-specific procedures and instructions.

1. Remove the ambient temperature sensor from the aspirated radiation shield so that it can be placed in a constant temperature bath while it is still connected to the sampler's signal

conditioner.

2. Prepare a convenient container (such as an insulated vacuum bottle) for the ambient temperature water bath and the ice slurry bath. See Step 3 below. If complete immersion of the sensor is necessary, wrap it in plastic film so liquid can reach the point where the connecting wire(s) and the sensor interface without wetting them. Use partial immersion when possible, thus keeping the interface dry. If immersion should be avoided altogether, it will be necessary to use thermal masses of metal rather than those based on water. Refer to Section 4.3.5 of Volume IV of the EPA QA handbook (EPA 1995). To further insulate the vacuum bottle, it can be positioned inside a larger 2-gal insulated container that has been modified to allow wires or cables to enter the top. Refer to Figure 4.3.5.3 of Volume IV of the EPA QA handbook.

   Keep the temperature changes relatively small and make comparative measurements in this order: AMBIENT→COLD→AMBIENT→HOT→AMBIENT. The range of temperatures need only be as broad as that expected to contain all the ambient temperatures that will be experienced during the upcoming time period, generally a year. The range to be expected is site-specific. HOT may have to be 120 °F for Phoenix, AZ, but around 80 °F for a location such as Barrow, AK.

3. For the ambient bath, use an insulated bottle that was filled with tap or deionized water several hours earlier and allowed to equilibrate to ambient temperature. For the ice slurry, the ice should be made with distilled water and then crushed into pea-sized pieces and mixed with distilled water until an easily penetrable slurry state is reached. As long as ice is present in the slurry and the open end of the bottle is guarded from ambient air temperature fluctuations, the ice slurry temperature will be 0.0 ± 0.1°C.

4. Wrap the sensor(s) and a thermometer together with a rubber band. The thermometer bulb and the temperature sensor active site should be close together. Immerse the sensor and the attached thermometer in the ambient temperature bath. Use a cork or some other device to cover the open end of the insulated bottle and thus keep ambient air from circulating over the top surface of the water (or ice slurry mass). The bath liquid should be stirred to ensure the temperature is uniform; never use the thermometer or temperature sensor to stir the bath. Gentle stirring should continue, if possible, during the measurement process; however, do not stir while readings are being taken because this may introduce noise into the readings. Wait for the ambient thermal mass and the sensor/thermometer temperatures to equilibrate. Be sure successive temperature readings are stable (indicating equilibration with the ice slurry) before taking comparative readings.

5. For each thermal mass, in the order indicated in Step 2 above, make a series of five measurements, taken about a minute apart. Accurately read the meniscus of the thermometer. Use magnification if necessary to see the meniscus; avoid parallax errors. If the measurements made support the assumption of equilibrium, then average the five readings and record the result as the sensor temperature relative to the thermometer for hot, ambient, and cold, 0.0 °C relative to the ice slurry. Record all readings in the sampler notebook.

6.5 Calibration of Sampler Pressure Sensor

Each reference or Class I equivalent $PM_{2.5}$ sampler has a built-in atmospheric pressure sensor whose output is processed to allow control of the actual sampling flow rate to the design value of 16.67 L/min. This section gives information concerning the care of barometers, their principles of operation, and how an aneroid barometer can be made traceable to a mercury-column Fortin barometer and then used to field-check the readings provided by the sampler's pressure sensor. The manufacturer's operating or instruction manual must be consulted for sampler-specific information on how to make adjustments to calibrate the pressure sensor.

6.5.1 General Requirements

1. As required in 40 CFR Part 50, Appendix L, the sampler must have the capability to measure the barometric pressure of the air surrounding the sampler over a range of 600 to 800 mmHg. This measurement shall have a resolution of 5 mmHg and a NIST-traceable accuracy of ±10 mmHg.
2. According to ASTM standard D 3631 (ASTM 1977), a barometer can be calibrated by comparing it with a secondary standard traceable to a NIST primary standard.
3. The Fortin mercurial type of barometer works on fundamental principles of length and mass and is therefore more accurate but also more difficult to read and correct than other types. By comparison, the precision aneroid barometer is an evacuated capsule with a flexible bellows coupled through mechanical, electrical, or optical linkage to an indicator. It is potentially less accurate than the Fortin type but can be transported with less risk to the reliability of its measurements and it presents no hazard to personnel from mercury spills. The Fortin type of barometer is best employed as a higher quality laboratory standard that is used to adjust and certify an aneroid barometer in the laboratory. The certified aneroid barometer can then be taken to the field and used to verify readouts from the transducer-type pressure sensor in the sampler. The sampler sensor can be left in the sampler during the comparison because atmospheric pressures are equivalent within a 100-m horizontal distance and a 0.5-m vertical distance. If there is a discrepancy, the aneroid barometer should be recompared to the Fortin-type barometer or other standard upon return to the laboratory. A discrepancy with the sampler sensor could indicate an offset in the sampler's pressure sensor adjustment or the need for replacement of the unit.
4. Protect all barometers from violent mechanical shock and explosively sudden changes in pressure. A barometer subjected to either of these events must be recalibrated. Minimize the vertical and horizontal temperature gradients across the instruments. Locate the instrument so as to avoid direct sunlight, drafts, and vibrations.

6.5.2 Calibration Procedures

6.5.2.1 Fortin -Type Barometer Readings

1. Read the temperature from the thermometer attached to the barrel to the nearest 0.1 °C.
2. Lower the mercury level in the cistern until it clears the index pointer. Raise the level slowly until a barely discernible dimple appears on the surface of the mercury.

3. Tap the barrel near the top of the mercury column.
4. Set the vernier so that the base just cuts off light at the highest point of the meniscus; carefully avoid parallax error.
5. Read the height of the mercury column from the barometer in the manner appropriate to the vernier scale used to the equivalent of the nearest 0.1 mmHg. Apply appropriate corrections for temperature and gravity as described in the barometer's instruction booklet.

6.5.2.2 Aneroid Type Barometer

1. Always use and read an aneroid barometer when it is in the same position (vertical or horizontal) as it was when calibrated. Locate the portable aneroid barometer next to the laboratory's primary standard to begin the calibration process.
2. Immediately before reading the scale of an aneroid barometer with mechanical linkages, tap its case lightly to overcome bearing drag.
3. Read the aneroid barometer to the nearest 1 mmHg. If the aneroid barometer is to be taken to the field, compare its readings to the laboratory's primary pressure standard. If possible, adjust the portable barometer to match the reading of the primary standard. If the portable barometer reading cannot be adjusted, note the offset and correct field readings accordingly.

6.6 Leak Checks

Two types of leak checks are specified for use with $PM_{2.5}$ samplers—an external leak check and an internal filter bypass leak check. The results for both of these procedures should be recorded. Figure 6-1 is an example of such a form. Each leak check procedure is described below.

6.6.1 External Leak Check

The sampler components to be subjected to this leak test include all components and their interconnections in which external air leakage would or could cause an error in the sampler's measurement of the total volume of sample air that passes through the sample filter.

All $PM_{2.5}$ samplers must include external air leak test components, accessory hardware, operator interface controls, a written procedure, and all other items necessary to carry out a leak test of the sampler at a field monitoring site without additional equipment.

$PM_{2.5}$ Sampler Sheet
General Information, and Leak Check, and Time Check

Site Location: _____ Site Designation: _____

Name and Affiliation: _____

Observer Name(s) and Affiliation(s): _____

_____

Sampler Model: _____ Sampler ID: _____

Leak Checks: Date of Test: _____

External			Internal	
Time	**Indicated Pressure, mmHg**		**Time**	**Indicated Pressure, mmHg**

Note: Repeat test or make repairs if necessary to achieve minimal leakage before proceeding with flow rate calibration.

Time Check: Sampler Time _____ Reference Time _____

Comments:

Figure 6-1. Example leak-check information sheet.

Follow these general steps to perform the external leak check procedure:

1. Remove the sampler inlet and install the flow rate measurement adapter supplied with the sampler (Figure 6-2). Install a leak check filter in the sampler filter holder.
2. Close the valve on the flow rate measurement adapter and use the sampler air pump to draw a partial vacuum into the sampler, including (at least) the impactor, the filter holder assembly (filter in place), the flow measurement device, and the interconnections between these devices, of at least 55 mmHg (75-cm water column), measured at a location downstream of the filter holder assembly.
3. Plug the flow system downstream of these components to isolate the components under vacuum from the pump, such as with a built-in valve.
4. Stop the pump.
5. Measure the trapped vacuum in the sampler with its built-in pressure-measuring device.
6. Measure the vacuum in the sampler with the built-in pressure-measuring device again at least 10 min after the first measurement or at the elapsed time specified in the sampler's operations manual.

CAUTION

Following completion of the leak test, the adapter valve should be opened slowly to limit the flow rate of air into the sampler. An excessive air flow rate may blow oil out of the impactor well and contaminate surfaces.

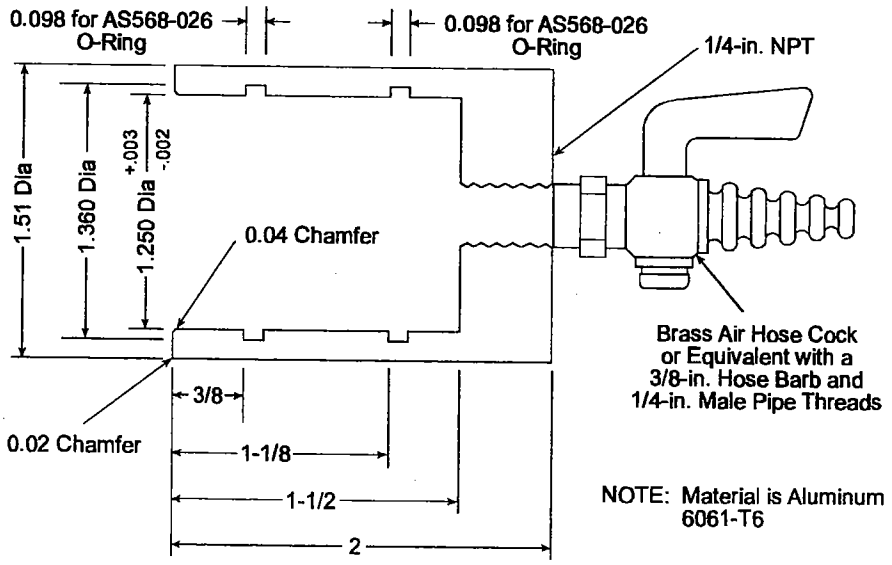

Figure 6-2. Flow adapter (all dimensions are in inches).

7. Upon completion of the leak test, slowly open the adapter valve, remove the adapter and plugs, and restore the sampler to the normal operating configuration.

To pass the external leakage test, the difference between the two pressure measurements should not be greater than the number of mmHg specified for the sampler by the manufacturer, based on the actual interior volume of the sampler, that indicates a leak of less than 80 mL/min.

Variations of the suggested technique or an alternative external leak test technique may be required for samplers whose design or configuration would make the suggested technique impossible or impractical. Therefore, a manufacturer may propose an alternative procedure to EPA under the reference or equivalency application under 40 CFR Part 53. In such cases, the manufacturer's EPA-approved leak test procedure should be followed.

6.6.2 Internal Filter Bypass Leak Check

This test determines if any portion of the sample flow rate that leaks past the sample filter without passing through the filter is significant relative to the design flow rate for the sampler. The suggested technique for implementing this leak test follows:

1. Perform an external leak test as described above.
2. Install a **flow-impervious** membrane material in the filter cassette, either with or without a filter, as appropriate, which effectively prevents air flow through the filter.
3. Use the sampler air pump to draw a partial vacuum within the sampler, downstream of the filter holder assembly, of at least 55 mmHg (75-cm water column).
4. Plug the flow system downstream of the filter holder to isolate the components under vacuum from the pump, such as with a built-in valve or an automatically activated solenoid valve.
5. Stop the pump.
6. Measure the trapped vacuum in the sampler with its built-in pressure-measuring device.
7. Measure the vacuum in the sampler with the built-in pressure-measuring device again several minutes after the first pressure measurement.
8. Remove the flow plug and membrane and restore the sampler to the normal operating configuration.

For successful passage of this test, the difference between the two pressure measurements should not be greater than the number of mmHg specified for the sampler by the manufacturer, based on the actual internal volume of the portion of the sampler under vacuum, that indicates a leak of less than 80 mL/min. As with the external leak check procedure described above, variations of the suggested technique may be used, provided that they were approved as part of the manufacturer's reference or equivalency application for that sampler.

If the leak rate for either of the above procedures is excessive, note the problem on the leak-check information sheet (Figure 6-1). Check the O-rings on the flow rate adapter for nicks, wear, and excessive flattening. Also check the outside of the intake tube (the downtube) where the device seats for deep scratches or dirt that could allow leakage. Check that the filter holder is

well-seated. Rectify any problems and repeat the leak check(s).

6.7 Verification/Calibration Frequency

Checking to verify that a sampler's flow rate measurement system still reads within the acceptance limit of the previous calibration should be done according to the sampler manufacturer's operating instructions, should take place at the field site, and should be done at least annually or

- Following major electrical or mechanical maintenance, such as replacement of a circuit board or rebuilding of the sampling pump assembly
- When a routine flow rate verification indicates a variation from the set point (16.67 L/min) of more than 4 percent.

If the annual verification fails, then recalibration and/or maintenance is required. Before beginning a flow rate calibration, the operator should repeat the flow rate verification to be certain there were no leaks in the connections between the flow rate verification device and the sampler inlet and that the flow rate data were reduced and interpreted correctly. In addition, the operator should ensure that the collector's ambient temperature and pressure measurement systems are responding accurately; if not, these systems must be recalibrated (or replaced and calibrated) before performing a flow rate calibration.

The recommended intervals for calibration and verification of flow rate, temperature, and barometric pressure are summarized in Table 6-1.

Table 6-1. Calibration and Verification Check Intervals

Parameter	Recommended minimum interval
Flow rate calibration (multipoint)	Upon failure of flow rate multipoint verification
Flow rate multipoint verification	On installation, then annually or when out of specifications
Flow rate verification (single-point)	Every 4 weeks
Temperature calibration (Multi point; both ambient air inlet and filter temperature sensors)	Upon failure of multipoint verification
Temperature multipoint verification	On installation, then annually or when out of specifications
Temperature verification (single-point; ambient air inlet sensor, filter temperature sensor if convenient to do so)	Every 4 weeks
Pressure calibration (multipoint)	On installation, then annually or when out of specifications
Pressure verification (single-point)	Every 4 weeks

7.0 Filter Preparation and Analysis

7.1 Overview

The quality of data from the $PM_{2.5}$ sampling program depends on several factors. A primary consideration is the analytical laboratory staff's attention to detail and their microbalance operation technique. This section offers guidelines to enhance the data quality of the laboratory operation and, hence, the $PM_{2.5}$ mass concentration and any additional chemical qualitative and quantitative determinations.

Microbalance resolution and repeatability requirements and filter media requirements are given in Section 4.3. Laboratory activities are summarized in Table 7-1.

7.2 Microbalance Environment

Gravimetric analysis of the filters is performed with a microbalance with a readability of 0.001 mg (1 µg) and a repeatability of 1 µg as listed in the microbalance's performance specifications. **Note**: The precision of mass measurements for unexposed filters based on replicate weighings will be greater than the microbalance's repeatability. Because of the greater sensitivity needed for measuring microgram-range weights or weight differences, microbalances are vulnerable to relatively small changes in physical environmental conditions, such as vibration, electrostatic charge buildup, temperature, or relative humidity (RH). Features to offset the effect of these variables on the measurements may be integrated into the design of the microbalances, or they may be offered as options.

Each microbalance used in the weighing procedures should be identified by a balance number. Make sure that the microbalance has been calibrated (at least annually) and maintained according to the manufacturer's recommendations. If it is out of calibration, the microbalance should be calibrated by a microbalance service technician according to the manufacturer's directions. The analyst should not attempt to repair the microbalance.

The microbalance must be located in the same controlled environment in which the filters are conditioned. Locate the microbalance in a climate-controlled, draft-free room or chamber (preferably dedicated to the use of balances and employing, if necessary, a high-efficiency particulate air [HEPA]-filtered air supply system on its inlet air system) to minimize human traffic effects and to stabilize the conditions of the weighing environment. Interior rooms without windows are preferred. The microbalance environment should maintain a slightly positive pressure. Ingress to and egress from the environment should be minimized. Dust contamination can be minimized by taking clean room measures such as cleaning the weighing area daily, installing sticky floor covering on the entrance(s) to the weighing area, and wearing clean laboratory clothing over anything exposed to uncontrolled environments. Ideally, a small chamber should be used because it is easier and cheaper to control the environment in a smaller space. Ideally, the microbalance should be situated within a laminar flow fume hood to minimize contamination by the analyst.

The following general guidelines should be followed to control environmental factors that may affect microbalance performance:

- Select a room that is not subject to large temperature or humidity variations and that has its

heating and air conditioning maintained 24 hours a day, including weekends.

- Locate the microbalance away from potential sources of drafts such as doors, windows, aisles with frequent traffic, ventilation ducts, and equipment with fans or moving parts.
- Locate the microbalance out of direct sunlight and away from local heating or cooling sources such as open flames, hot plates, water baths, ventilation ducts, windows, and heat-producing lamps.
- Locate the microbalance on a sturdy, vibration-free base (ideally, a stone weighing table) and away from any equipment that produces vibrations. If these arrangements are not possible, isolate the microbalance from such equipment by placing a stabilizing slab under the microbalance and/or by placing composite vibration damping pads at three points under the microbalance's legs or under the stabilizing slab. Placing the pads at only three points eliminates any possible rocking associated with pads placed at four points.
- Ensure that the microbalance's base is sufficiently level to permit leveling of the microbalance according to the manufacturer's instructions.

7.3 Mass Reference Standards

Mass reference standards should be in the range of 100 to 200 mg, given that the mass range of a typical 46.2-mm diameter filter is from 110 to 160 mg. They should be certified as being traceable to NIST mass standards (see ASTM 1993b; Harris 1993; Kupper 1990). Additionally, they should have an individual tolerance of no more than 0.025 mg. Examples of mass reference standards that meet these specifications are American National Standards Institute/American Society for Testing and Materials (ANSI/ASTM) Classes 1 and 1.1. The mass reference standards should be recalibrated on a regular basis (e.g., yearly) at a State weights and measures laboratory holding a NIST certificate of traceability or at a calibration laboratory accredited by the National Voluntary Laboratory Accreditation Program (NVLAP), which is administered by NIST (Harris 1994; White 1997). The recalibration frequency should be determined from records of previous recalibrations of these standards.

Note: The microbalance's resolution and repeatability are smaller than the tolerance of the most accurate classes of mass reference standards. However, the reported uncertainty of a mass reference standard recalibrated at NIST-traceable or NVLAP-accredited laboratories will be smaller than the individual tolerance of the standard. The accuracy of the gravimetric analysis may be limited by the uncertainty of the standards rather than by the microbalance's characteristics. Because the loading mass is determined by difference, the loading error associated with the calibration standard's tolerance can be estimated as

loading error in μg = (standard uncertainty in mg/standard mass in mg) × (loading mass in μg).

Two separate sets of mass reference standards are recommended. Working calibration standards should be used for routine filter weighing and kept next to the microbalance in a protective container. Laboratory primary standards should be handled very carefully and should be kept in a locked compartment. The working standards' masses should be verified against the laboratory primary standards every 3 to 6 months to check for mass shifts associated with handling or contamination. The verified values of the working standards as measured relative to the laboratory primary standards should be recorded in a laboratory QC notebook and used to check

Table 7-1. Filter Preparation and Analysis Checks

Activity	Method and frequency	Requirements	Action if the requirements are not met
Microbalance		Resolution of 1 µg, repeatability of 1 µg.	Obtain proper microbalance.
Microbalance environment		Climate-controlled, draft-free room or chamber or equivalent; clean area around microbalance.	Modify the environment.
Mass reference standards	Working standards verified every 3 to 6 months against National Institute of Standards and Technology (NIST)-traceable laboratory primary standards.	Standards bracket weight of filter; individual standard's tolerance less than 25 µg; handle with smooth, nonmetallic, clean forceps.	Obtain proper standards or forceps.
Filter handling	Observe handling procedure.	Use powder-free gloves and smooth, clean forceps. Replace polonium-210(^{210}Po) antistatic strips every 6 months.	Discard mishandled filter or old antistatic strip.
Filter integrity check	Visually inspect each filter.	No pinholes, separation, chaff, loose material, discoloration, or filter non-uniformity.	Discard defective filter.
Filter identification	Write filter number on filter handling container and on laboratory data form in permanent ink.	Make sure the numbers are written legibly.	Replace label or correct form.
Presampling filter conditioning	Determine the correct conditioning period (at least 24 hours) for each new lot of filters. Observe and record the conditioning chamber's RH and temperature; enter laboratory data form.	Check for stability of lot blank filter weights. Weight changes should be <15 µg per week before and after equilibration. Mean RH between 30 and 40 percent, with a variability of not more than ±5 percent over 24 hours. Mean temperature should be held between 20 and 23 °C, with a variability of not more than ±2 °C over 24 hours.	Revise conditioning period; repeat conditioning.

(continued)

Table 7-1. (continued)

Activity	Method and frequency	Requirements	Action if the requirements are not met
Pre- and post-sampling filter weighing	Observe all weighing procedures. Perform all quality control (QC) checks.	Neutralize the electrostatic charge on filters. Wait until balance indicates a stable reading to record value.	Repeat weighing. Many laboratories routinely repeat the weighing.
Internal QC	After approximately every 10th filter, rezero the micro-balance and reweigh at least one working standard. Weigh approx. 10 percent laboratory blanks/weighing session. Reweigh one replicate filter at the end of the weighing session. Weigh approx. 10% field blanks.	The working standard measurements should agree within 3 µg of the verified values. Laboratory blank and replicate measurements should agree within 15 µg. Field blank measurements should agree within 30 µg.	Troubleshoot and take appropriate corrective action as specified in the quality assurance project plan (QAPP) to attain acceptable levels. Do not correct or invalidate $PM_{2.5}$ measurements based on high blank levels.
Postsampling filter storage	Monitor the time between sampling and weighing.	Weighing should be completed within 240 hours (10 days) after the end of sampling, unless the filter is maintained at 4 °C or below during the entire time between retrieval from the sampler and start of the conditioning, in which case the period shall not exceed 30 days.	Troubleshoot and take appropriate corrective action.
Postsampling inspection, documentation, and verification	Examine the filter and field data sheet for correct and complete entries. If sample was shipped in a cooled container, verify that low temperature was maintained.	No damage to filter. Field data sheet complete. Sampler worked OK.	Save filter for inspection. Flag sample. Troubleshoot and take appropriate corrective action.
Postsampling filter equilibration	Equilibrate filters for at least 24 hours. Observe and record the equilibration chamber's RH and temperature; enter on laboratory data sheet.	Mean RH between 30 and 40 percent, with a variability of not more than ±5 percent over 24 hours. Mean temperature should be held between 20 and 23 °C, with a variability of not more than ±2 °C over 24 hours.	Repeat equilibration.

the calibration of the microbalance. If multiple microbalances are being used, all working standards should be verified at the same time to ensure that all gravimetric measurements are intercomparable.

Always use smooth, nonmetallic forceps for handling mass reference standards. The standards are handled only with these forceps, which are not used for any other purpose. Mark these forceps to distinguish them from the forceps used to handle filters. Forceps should be cleaned with alcohol and lint-free wipes before handling standards and then should be allowed to air-dry. Handle the standards carefully to avoid damage that may alter their masses.

7.4 Filter Handling

Careful handling of the filter during sampling, conditioning, and weighing is necessary to avoid measurement errors due to damaged filters or a gain or loss of collected particles on the filters. Whenever filters are handled, the analyst should wear antistatic, powder-free gloves; these gloves act as an effective contamination barrier. Gloves that are packed in a box can carry an electrostatic charge. It is a good practice to discharge them by touching a good electrical ground after putting them on. The filters should be handled carefully by the support ring, rather than by the filter material, with smooth, nonserrated forceps that are used only for that purpose. Mark these forceps to distinguish them from the forceps used to handle mass reference standards. Forceps should be cleaned with alcohol and lint-free wipes before handling filters and then allowed to air-dry. These precautions reduce the potential effect from body moisture or oils contacting the filters and subsequently affecting the measured weights.

If filter loadings will be speciated chemically, the possibility of contamination from gloves should be considered. Some gloves have been found to be contaminated with sulfate. If antistatic gloves are used, ensure that ammonium chloride is not a component of the antistatic reagent. Powder-free gloves that are certified to be free of chloride, nitrate, and sulfate are available.

In the laboratory, each filter should be transferred from its sealed manufacturer's packaging to a clean filter-handling container, such as a glass or plastic petri dish or petri slide, to reduce the risk of contamination. The filter should remain in this container, except for weighing, until it is loaded into a filter cassette prior to sampling. Each filter should have a unique identification number. If such a number is not provided by the filter manufacturer, a label that lists the filter number can be attached to the filter-handling container. It is recommended that each microbalance be assigned a block of filter numbers to be processed and used sequentially. Take care to avoid mistakenly assigning the same number twice or omitting a number. Color-coded labels may be helpful for separating groups of filters when more than one microbalance is being used.

If sufficient resources are available, bar coding for filters can be introduced. Bar code readers and printers for microbalances are already generally available and can significantly improve the efficiency of filter inventory tracking and processing.

7.5 Filter Integrity Check

All filters should be visually inspected for defects before the initial weighing. If any defects are found, discard the filter. Return any lot of filters containing a high number of defects to the supplier. Specific filter defects to look for are the following:

- Pinhole—A small hole appearing (a) as a distinct and obvious bright point of light when examined over a light table or screen or (b) as a dark spot when viewed over a dark surface.
- Separation of ring—Any separation or lack of seal between the filter and the filter border reinforcing the ring.
- Chaff or flashing—Any extra material on the reinforcing, polyolefin ring or on the heat seal area that would prevent an airtight seal during sampling.
- Loose material—Any extra loose material or dirt particles on the filter.
- Discoloration—Any obvious discoloration that might be evidence of contamination.
- Filter nonuniformity—Any obvious visible nonuniformity in the appearance of the filter when viewed over a light table or black surface that might indicate gradations in porosity or density across the face of the filter.
- Other—A filter with any imperfection not described above, such as irregular surfaces or other results of poor workmanship.

7.6 Filter Conditioning

New filters should be placed in the conditioning environment immediately upon arrival and stored there until the presampling weighing. Filters must be conditioned immediately before both the pre- and postsampling weighings. Filters must be conditioned for at least 24 hours (see Section 7.7) to allow their weights to stabilize before being weighed.

Filters must be conditioned at the same conditions (humidity within ±5 percent RH) before the pre- and postsampling weighings. Mean RH must be held between 30 and 40 percent, with a variability of not more than ±5 percent over 24 hours. However, where it can be shown that the mean ambient RH during sampling is less than 30 percent, conditioning is permissible at a mean RH within ±5 percent RH of the mean ambient RH, but in no case less than 20 percent RH. Mean temperature should be held between 20 and 23 °C, with a variability of not more than ±2 °C over 24 hours. RH and temperature should be measured and recorded on a continuous basis during filter conditioning (either by a recording hygrothermograph or by electronic instruments).

If spikes of temperature or, especially, RH occur during the conditioning period, the appropriate local decision maker should evaluate all relevant data and decide if the spikes are significant enough to compromise the conditioning period. The evaluation of the T and RH data should include blank performance in relation to the spikes. Experience with this comparison should eventually lead to the ability to estimate which spikes are too big. The evaluation should also include the significance of the timing of the spike in relation to the time of weighing, the closer to the weighing, the more significant the effect on the weight.

If the data recording device requires selection of an interval, a minimum of 5 minute averages might be used initially. In this situation, the data evaluator may use a rolling (accumulative) average or standard deviation of of the averages for the 24 hours; these methods of comparing variability to the control limits (±2°C or ±5%RH) will appropriately minimize the effect of a spike at the beginning of the 24 hours; they will also inappropriately minimize the effect of a spike at the end of the 24 hour period (such as upon entering the weighing room prior to

weighing). Use of standard deviation of averages during the period will be more statistically representative of the conditions and will probably minimize spikes more than the rolling average method. Another consideration, for local decision makers, is whether a 95 or 99 % confidence interval is more acceptable.

An air-conditioned room may be used as a conditioning chamber, if RH and temperature can be maintained within the above specifications while filters are being conditioned. If the room's heating and ventilation system cannot maintain RH within these specifications, passive chemical or active electromechanical methods should be used to control RH. See ASTM (1993a) for information about maintaining constant RH by means of saturated saltwater (e.g., magnesium chloride) solutions in an airtight chamber. Chambers with active humidity and temperature controllers are available from laboratory supply firms. Conditioning chamber malfunctions, discrepancies, and maintenance activities should be recorded in a logbook or a laboratory notebook.

Within the conditioning chamber, the filters should be placed on a covered rack or an open-sided cabinet that will allow air circulation over the filters while reducing the chance that airborne material inside the chamber will settle onto the filters.

Care should be taken to avoid contaminating $PM_{2.5}$ filters inside the conditioning chamber with particulates released by other filter media (e.g., quartz and glass) that are also being conditioned in the chamber. Laboratory blanks (see Section 7.7) should be used to check for potential cross-contamination from airborne particulates inside the conditioning chamber. If there is evidence of such cross-contamination, corrective actions should be taken. One possible solution for a cross-contamination problem is maintaining separate conditioning chambers for $PM_{2.5}$ filters and for other filter media.

Filters should be conditioned in their filter-handling containers. Label, if possible, both the container's lid and bottom half. During conditioning, the lid should be placed either beneath the open container or partially covering the container. Care should be taken to avoid accidentally mixing up the filter identification numbers during conditioning. To improve filter inventory control, place the filters in the chamber in numerical order so that the analyst can more easily weigh the filters in numerical order.

Researchers in the arid western and southeastern portions of the United States have found that some Teflon® filters exhibit a loss of weight for a period of time after they are removed from their original shipping containers. The magnitude of weight loss varies from lot to lot and may be due to loss of volatile components from the polyolefin support ring or the glue used with some filters to adhere the Teflon® material to the support ring. In the arid West, weight loss of up to 150 µg has been observed (Desert Research Institute 1994). Some filters require at least 6 weeks to equilibrate.

In the Southeast, filter weight stability experiments were done as part of U.S. EPA's research to develop the volatility test now included in 40 CFR Part 53.66 of the revised requirements for designation of reference and equivalent methods for $PM_{2.5}$ (Eisner 1997). Small but still relatively significant (i.e., from 0 to 45 µg) weight losses were observed. These experiments showed that the problem could be addressed by active conditioning (e.g., passing HEPA-filtered air across the filters for a 1-hour duration) instead of passive conditioning. Active conditioning was conducted

with each filter sitting in the bottom of an open petri dish. Consecutive 4-hour periods of active conditioning of filters did not change the weight by more than ±5 µg.

Note: Typically, filters come packed together in large groups or in a container with separators. This package is usually contained inside another clear, reclosable plastic package, which may, in turn, be placed inside a box used in shipping. The more time that each filter is exposed to the conditioning environment, the more likely that its weight will be stable by the end of a conditioning period.

New filters should be removed individually from their sealed packages, placed in their own filter-handling containers (e.g., an uncovered petri dish), and conditioned for a sufficient time (see Section 7.7) to allow their weight to stabilize before use.

7.7 Lot Blanks, Laboratory Blanks, and Field Blanks

Three types of blank filters should be used. Lot blanks are unsampled filters used to determine filter weight stability over long periods of time (e.g., 1-6 weeks) due to the volatilization of material from the filter or to the absorption of gaseous material into the filter from the atmosphere. Laboratory blanks are conditioned, unsampled filters used to determine any weight change between pre- and postsampling weighings due to contamination in the microbalance environment. Field blanks are conditioned, unsampled filters used to determine whether similar contamination occurs during sampling.

The weight stability of filters can be determined by assigning three unsampled filters from each new filter exposure lot as exposure lot blanks. A filter lot is defined as a single shipment of filters from a filter manufacturer or from another source. A filter exposure lot is defined as a subsample of filters from the filter lot to be conditioned within a specific time period. After an initial 24-hour conditioning, these three exposure lot blanks are reweighed periodically (e.g., weekly/daily) and stored in the conditioning chamber (with the other filters) between weighings. These measurements should be recorded in the QC notebook (see Figure 7-1) or an equivalent database. These weighings should continue until the 24-hour weight change is less than 15 µg (i.e., three times the precision for weighing unexposed filters). This filter weight stability experiment determines the period that the entire filter lot should be conditioned before it can be used for routine sampling. This experiment need not be continued during routine sampling but should be repeated when a new lot of filters is received.

Laboratory blanks should be kept inside the conditioning chamber except during weighing sessions. Weigh enough laboratory blanks during a presampling weighing session to provide at least one single-use laboratory blank during each subsequent postsampling weighing session. The pre- and postsampling weights should be recorded in the QC notebook and the laboratory data form (see Figures 7-1 and 7-2) or an equivalent database. If the weight change exceeds 15 µg, contamination in the conditioning chamber may be occurring. Take appropriate troubleshooting and corrective actions.

Field blanks for manual (i.e., single-filter) samplers should be transported to the sampling site, momentarily installed in the sampler, removed, and stored in their protective containers, inside the sampler's case at the sampling site until the exposed filters are retrieved for postsampling weighing. In the case of sequential (i.e., multiple-filter) samplers, field blanks should be placed in

unused sampler slots, kept there during the sampling interval, and retrieved with the exposed filters. This approach presumes that unused slots are available and that the sampler can be programmed to not sample the field blank. If this cannot be done, follow the procedure used for the manual sampler. As a recommended best-case practice, site operators are encouraged to occasionally install field blanks in a nonactive manual sampler's filter holder over a 24-hour period during which the sampler is not scheduled to be sampling. This practice may be a useful troubleshooting technique.

Field blanks should be implemented at approximately 10% of a monitor's sampling frequency. Therefore, a monitor operating on a 1 in 6 day schedule would be expected to have approximately 6 blanks in a year while a monitor operating every day would be expected to have approximately 36 blanks. The pre- and postsampling weights should be recorded in the QC notebook and the laboratory data form or an equivalent database. If the weight change exceeds 30 µg, contamination during transportation or at the sampling site may be occurring. Take appropriate troubleshooting and corrective actions. Note: Since field blanks reflect the effect of factors occurring at **all** steps of the data collection process, evaluation of the effects of field factors requires removing the lab blank variability from the total field variability values and then looking at the remainder to see the variability due to factors having an effect in the cassette assembly, transport to the field, sampling, transport back to the laboratory, and recovery of the filters from the cassette. This consideration does not mean that the field blank acceptance criteria might be changed from 30 μg or the laboratory blank criteria from 15 μg by the field variability.

7.8 Electrostatic Charge Neutralization

Electrostatic charge buildup will prevent a microbalance from operating properly. Static charge is the accumulation of electrical charges on the surface of a nonconductive material. Common symptoms of this problem include noisy readout, drift, and sudden readout shifts. To reduce static charge within the balance, it may be necessary to place a radioactive antistatic strip containing a very small amount (i.e., 500 picocuries) of ^{210}Po in the weighing chamber. It may also be necessary to pass each filter near, but not touching, an antistatic strip before it is weighed. See Engelbrecht et al. (1980), Hawley and Williams (1974), and Weil (1991) for more information about electrostatic charge and how to minimize its effects.

^{210}Po antistatic strips are used to reduce electrostatic buildup in the microbalance's weighing chamber and on individual filters by charge neutralization. They neutralize electrostatic charges on items brought within an inch of them. These antistatic strips are safe, commonly available, and inexpensive. ^{210}Po has a half-life of 138 days. Change the antistatic strips every 6 months and dispose of the old strips according to the manufacturer's recommendations. Antistatic solutions are available for coating (and, at appropriate and relatively infrequent intervals, recoating) the interior and exterior nonmetallic surfaces of the weighing chamber. This coating facilitates the draining of electrostatic charges away from these surfaces (by making them conductive) to a common ground to which the metallic conductive surfaces are connected. Earth-grounded conductive mats may also be placed on the weighing table surface and beneath the analyst's shoe surfaces to reduce electrostatic charge buildup.

Do not assume that grounding eliminates all electrostatic buildup because the electrical ground may not be perfect. Even though a filter weight might stabilize within 30 to 60 sec and no weight drift is

observed during that period, the microbalance may still be influenced by some electrostatic buildup. It may still be necessary to repeat the neutralization procedure and to use antistatic strips inside the weighing chamber.

Filter Lot Number	C20102	Analyst	J. Armstrong
Balance Number	A44603	QC Supervisor	R. Vanderpool

Analysis Date	Initial Working Standard 1 Weight (mg)	Final Working Standard 1 Weight (mg)	Initial Working Standard 2 Weight (mg)	Final Working Standard 2 Weight (mg)
6/30/97	100.000	100.002	199.999	199.998
8/13/97	100.001	100.001	200.001	200.000

Filter Number[a]	Analysis Date	Presampling Mass (mg)	Analysis Date	Postsampling Mass (mg)
D-110 (LB)	6/30/97	136.546	8/13/97	136.550
D-111 (LB)	6/30/97	129.999	8/13/97	130.006
D-112 (LB)	6/30/97	130.633	8/13/97	130.645
R-700 (FB)	6/30/97	130.896	8/13/97	130.904
R-701 (FB)	6/30/97	128.339	8/13/97	128.345
R-702 (FB)	6/30/97	130.929	8/13/97	130.936

[a] Indicate blank measurements here (LB = lab blank, FB = field blank).

Figure 7-1. Example laboratory internal QC log.

Filter Lot Number	C20102	Analyst	J. Armstrong
Balance Number	A44603	QC Supervisor	R. Vanderpool
Presampling Filter Weighing	Date 6/30/97	RH 33	Temp 22
Postsampling Filter Weighing	Date 8/13/97	RH 38	Temp 21

Filter Number[a]	Presampling Mass (mg)	Postsampling Mass (mg)	Net Mass Filter Loading (mg)
100 mg (WS)	100.000	100.001	0.001
200 mg (WS)	199.999	200.001	0.002
D-110 (LB)	136.546	136.550	0.004
D-111 (LB)	129.999	130.006	0.007
D-112 (LB)	130.633	130.645	0.012
R-700 (FB)	130.896	130.904	0.008
R-701 (FB)	128.339	128.345	0.006
R-702 (FB)	130.929	130.936	0.007
R-691	139.293	139.727	0.434
R-692	136.020	136.455	0.435
R-693	135.818	136.260	0.442
R-694	131.456	131.905	0.449
R-695	137.508	137.973	0.465
R-696	136.098	135.554	0.456
R-697	131.029	131.483	0.454
R-698	125.175	125.641	0.466
R-699	131.165	131.633	0.468
R-691 (R)	139.293	139.730	0.437
100 mg (WS)	100.002	100.001	0.001
200 mg (WS)	199.998	200.000	0.002

[a]Indicate working standard (WS), lab blank (LB), field blank (FB), or replicate (R) measurement here.

Figure 7-2. Example laboratory data form.

Charge neutralization times may need to be longer than 60 sec for sampling situations in which (1) a high amount of charge has developed on collected particles due to their origin or (2) the particle loading on a filter is large. Electrostatic charge buildup becomes greater as the air becomes drier. A 60-sec charge neutralization may be sufficient in ambient indoor air conditioned to 37 percent RH and 23 °C but not in 20 percent RH and 23 °C in arid environments. This latter environment may require that the filter sit for more time on the antistatic strip. The longer neutralization period may have to be performed inside the weighing chamber or in a second small chamber used only for charge neutralization.

7.9 Presampling Filter Weighing (Tare Weight)

The reference method (EPA 1997) requires that the presample filter weighing be conducted within 30 days of the sampling period. The microbalance must be located in the same controlled environment in which the filters are conditioned. The filters must be weighed without intermediate or transient exposure to other conditions or environments.

This section presents procedures specific to a common commercially available microbalance. Calibration, QC checks (and acceptance tolerances), and operational procedures may have to be adapted for use with other microbalance models.

Researchers have found that the precision of mass measurements for unexposed filters based on replicate weighings is typically 3 to 5 µg/filter (Desert Research Institute 1994). The precision on exposed filters is typically 5 to 8 µg/filter. Precision for exposed filters with loadings heavier than 1 mg/cm^2 of filter surface area may approach ±2 percent of the loading. The precision for net mass filter loadings (typically 6 to 9 µg/filter) is defined as the square root of the sum of the squares of the pre- and postsampling precision.

Follow these steps during the presampling filter weighing:

1. Record the RH and temperature of the conditioning chamber on the laboratory data form and in the laboratory QC notebook or database.

2. Clean the microbalance's weighing chamber with a fine brush, if necessary. Antistatic brushes for cleaning the microbalance and the surrounding area are available. Avoid using pressurized gas, which may blow damaging debris and oils into the microbalance's mechanism. Recoat the interior and external nonmetallic surfaces of the chamber with an antistatic solution, if necessary. Clean the surfaces near the microbalance with antistatic solution- or methyl alcohol-moistened disposable laboratory wipes. Clean the standard forceps with a lint-free cloth and the filter forceps with the moistened wipes. Allow the forceps to air-dry. Make sure the forceps are thoroughly dry before use. Even a small amount of moisture can cause a significant measurement bias.

3. To ensure maximum stability, it is recommended that the microbalance be turned on at all times. This procedure enables the microbalance to be operational at any time and eliminates the need for a warmup period before analyses are performed. Newer microbalances are always turned on (except for their displays) when they are plugged in.

4. Zero (i.e., tare) and calibrate the microbalance according to the manufacturer's directions. Many newer microbalances calibrate themselves automatically when the operator presses a

key.

5. Using smooth, nonserrated, nonmetallic forceps, weigh two working mass reference standards (for example, a 100-mg standard and a 200-mg standard) as a QC check. Handle the working standards carefully to avoid damage that may alter their masses. Verify the working standards' masses every 3 to 6 months or after any incident of rough handling against the laboratory's primary standard weights (ASTM Class 1 or 1.1 standards). The working standards should bracket the mass of a blank or a loaded filter. Wait until the microbalance's display indicates that a stable reading has been obtained. Consult the microbalance's operating manual for more information about obtaining stable readings. Record the certified and measured values of these standards on the laboratory data form and in the laboratory QC notebook or database.

   If the verified and measured values of a working standard disagree by more than 3 µg (i.e., three times the microbalance's repeatability), reweigh the working standard. If the two values still disagree, troubleshoot and take appropriate corrective action, which may include (1) recertifying the working standards against the laboratory primary standards and/or (2) having a service technician repair the microbalance. The analyst should not attempt to repair the microbalance.

   Weigh enough laboratory blanks during a presampling weighing session to provide at least 10 percent or one single-use laboratory blank during each subsequent postsampling weighing session. Weigh enough field blanks during a presampling weighing session to provide at least 10 percent or one single-use field blank during each subsequent postsampling weighing session. Record the presampling weights on the laboratory data form and in the laboratory QC notebook or database.

6. Weigh the filters. Operate the balance according to the manufacturer's directions. Newer microbalances are so easily rezeroed that analysts should rezero the balance before each weighing. Take the filter from its filter-handling container (petri dish or equivalent) by gently slipping the filter-handling forceps under the outer polyolefin support ring. Hold the filter only by the ring, not by the filter material. Pass the filter, support ring side up, near a ^{210}Po antistatic strip for 30 to 60 sec immediately prior to weighing. The antistatic strip should be inside the weighing chamber or as close to the chamber door as is practical. Immediately transfer the filter to the microbalance's pan and close the weighing chamber door. After the microbalance's display indicates that a stable reading has been obtained, record the balance number, the filter number, the filter lot number, and the filter's tare weight (presampling mass) on the laboratory data form.

7. After approximately every 10th filter weighing, the analyst should reweigh at least one of the working standards. Record the measurement on the laboratory data form and in the laboratory QC notebook or database. If this measurement disagrees from the verified value by more than 3 µg (i.e., three times the microbalance's reproducibility), reweigh the standard. If the two measurements still disagree, troubleshoot and take appropriate corrective action, which may include (1) reweighing some or all of the previously weighed filters, (2) recertifying the working standards against the laboratory primary standards, and/or (3) having a service technician repair the microbalance. The analyst should not attempt to repair the microbalance.

At the end of the weighing session, reweigh both working standards. Record the measurements on the laboratory data form and in the laboratory QC notebook or database.

8. Any unused filter whose weight is outside the normal range (i.e., 110 to 160 mg) should be investigated. If there is a consistent negative replication (>15 µg) for laboratory blank filters, it is usually a sign that the filters have not equilibrated long enough. In this case, troubleshoot and take appropriate corrective action.

9. One routine filter should be reweighed at the end of the weighing session. Record the replicate measurement on the laboratory data form. If the replicate measurement disagrees from the original measurement by more that 15 µg, reweigh the filter. If the measurements still disagree, troubleshoot and take appropriate corrective action, which may include (1) reweighing all or some of the previously weighed filters, (2) reweighing the working standards, or (3) having a service technician repair the microbalance. The analyst should not attempt to repair the microbalance.

10. Return the filter to the filter-handling container, replace the lid to cover the filter, and return the container to the conditioning chamber to protect it from contamination prior to sampling.

11. Check the filter cassettes and the backing screens for fractures, cracks, evidence of wear, or contamination. Clean or replace as necessary. The cassettes can be washed in a dishwasher and then rinsed with deionized water.

12. When the time comes for the filters to be used at the sites (use must occur within 30 days of the initial weighing), install each filter in a filter cassette, and put the filter/cassette assembly into a protective container for transport to the sampler (see Figure 7-3). Attach a label with the filter identification number to the outside of the protective container. Double-check the entries in the laboratory data form (Figure 7-1). Prepare several extra filters in case a filter is invalidated during the installation process.

13. If the filters will be mailed, the field operator should be supplied with reinforcing envelopes or some other means (in addition to the protective container) to protect exposed filters during their shipment back to the analytical laboratory.

7.10 Postsampling Documentation and Inspection

Upon receipt of the sample from the field, the analyst should follow these steps:

1. Examine the field data sheet. Determine whether all data needed to verify sample validity and to calculate mass concentration (e.g., average flow rate, ambient temperature and barometric pressure, and elapsed time) are provided. If data are missing or unobtainable from a field operator or if a sampler malfunction is evident, save the filter for inspection and record on the laboratory data form that the sample has been voided and the reason. Notify the appropriate personnel.

2. If the shipment was to be kept cold, for storage at 4 °C verify that the temperature of the cooler's interior was maintained at the desired point. This can be done by quickly reading the min/max thermometer that was placed in the container at the time of shipment or by inspecting the cool packs to determine if they are still frozen or cold. If the temperature is between 4 and 25 °C, but is below the maximum temperature that was recorded during the filter sampling period, assess the temperature and note other relevant information and alert the QC decision maker to possible need to determine a shorter analysis deadline for the sample. All sample shipments that were intended to be shipped at 4 °C and in fact were received cold should be refrigerated at approximately 4 °C until several hours before the start of the filter conditioning period. If the protective container is cold, allow it to warm to the filter conditioning environment's temperature before opening to preclude water condensation on a cold filter. Remove the filter cassette from its protective container and examine the container. If particulate matter or debris is found in the protective container after the filter has been removed, record that the sample has been flagged as questionable and state the reason as a remark at the bottom of the laboratory data form. Save the filter for inspection. Notify the appropriate personnel.

3. Match the filter identification number with the correct laboratory data form on which the original microbalance number, filter number, presampling filter weight, and other information were inscribed. Group filters according to the microbalance used to determine their initial tare weights. Initial separation of filters in this way eliminates the risk of a measurement error that could result from the use of different microbalances for pre- and postsampling weighings.

4. Remove the filter from both the protective container and the filter cassette. Some cassettes may require special tools to disassemble them. **Note**: The stainless steel screen is sharp. Be careful! Be very careful when removing the filter from the cassette. Be careful not to touch or otherwise disturb the filter and its contents. Transfer the filter to a filter-handling container labeled with the corresponding filter number. Place the used filter in the container "dirty-side" up. Keep the particles from contact with the walls of the container. The

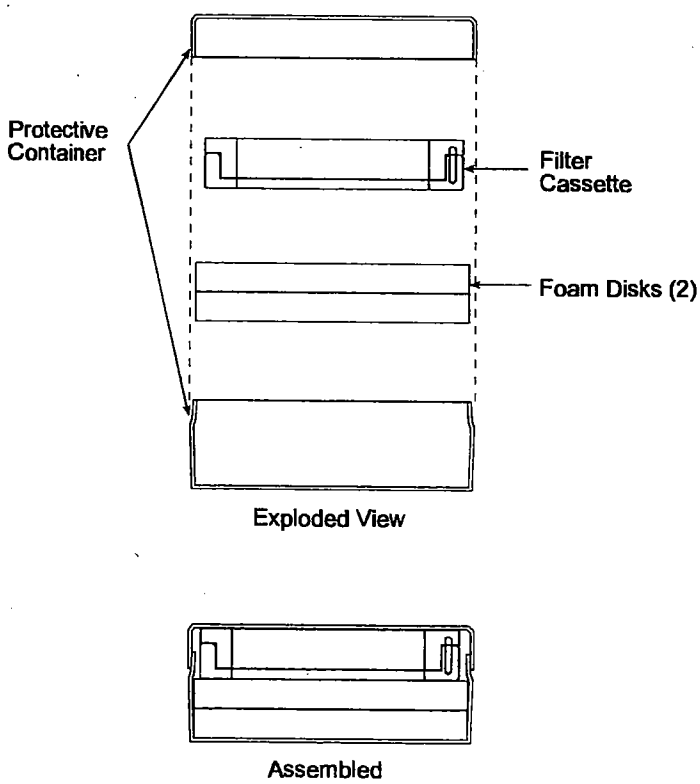

Figure 7-3. $PM_{2.5}$ filter cassette and protective container.

filter should be handled with clean, smooth forceps and should not be touched by hands. Inspect the filter for any damage that may have occurred during sampling. If any damage is found, note that the sample has been flagged as questionable and state the reason as a remark at the bottom of the laboratory data form. Save the filter for inspection. Notify the appropriate personnel.

5. Transfer the filter in its filter-handling container to the conditioning chamber.
6. Allow the filter to condition for at least 24 hours.
7. Remove the cassette and stainless steel backing screen to another area for cleaning.

7.11 Postsampling Filter Weighing (Gross Weight)

Both the pre- and postsampling filter weighings should be performed on the same analytical balance. Different analysts can perform the pre- and postsampling filter weighings as long as the appropriate standard operating procedures (SOPs) have been followed and the working standard and replicate measurements are within specifications. Use an effective technique to neutralize static charges on the filter. The postsampling conditioning and weighing shall be completed within 240 hours (10 days) after the end of the sampling period, unless the filter is maintained at 4 °C or below during the entire time between retrieval from the sampler and start of the conditioning, in which case the period shall not exceed 30 days.

Follow these steps during postsampling filter weighing:

1. Group filters in numerical order according to the microbalance used for preweighing and by their filter numbers. Reweigh each filter on the same microbalance on which its presampling weight was obtained.
2. Repeat Steps 1 through 11 in Section 7.9.
3. At least one laboratory blank and any available field blank (or approximately 10 percent of the weighed filters, if the number of filters being weighed is larger than 10) should be weighed. If the pre- and postsampling weights for the laboratory blanks disagree by more than 15 µg, repeat the measurements. If the pre- and postsampling weights for the field blanks disagree by more than 30 µg, repeat the measurements. If the two measurements still disagree, troubleshoot and take appropriate corrective action as specified in the reporting organization's QAPP. Measurements for sampled filters should not be corrected to account for blank measurements. High blank values should not cause the automatic invalidation of sampled filters that were measured during the same weighing session. Instead, high blank values should trigger troubleshooting and corrective action to reduce blank values to acceptable levels.
4. One routine filter should be reweighed at the end of the weighing session. Record the replicate measurement on the laboratory data form. If the replicate measurement disagrees from the original measurement by more that 15 µg, reweigh the filter. If the measurements still disagree, troubleshoot and take appropriate corrective action, which may include (1) reweighing all or some of the previously weighed filters, (2) reweighing the working standards, or (3) having a service technician repair the microbalance. The analyst should not attempt to repair the microbalance.

5. If the filter will receive further analysis, return it to the filter-handling container and note on the container and the laboratory data form that additional analyses are required. Transfer the filter to the laboratory responsible for performing the additional analyses.

7.12 Calculation of Net Mass Filter Loading

A filter's postsampling mass minus its presampling mass is the net mass loading for that filter. Record this value on the laboratory data form. Refer to Section 11.0, "Calculations, Validations, and Reporting of $PM_{2.5}$ Monitoring Data" for the calculations required to compute and report ambient $PM_{2.5}$ concentrations in $\mu g/m^3$. Measurements for sampled filters should not be corrected to account for blank measurements.

7.13 Additional $PM_{2.5}$ Analysis Requirements

Section 2.8.1.5 of 40 CFR Part, Part 58, Appendix D states:

(a) Within 1 year after September 16, 1997, chemical speciation will be required at approximately 25 $PM_{2.5}$ core sites collocated at Photochemical Assessment Monitoring Station (PAMS) sites (one type 2 site per PAMS area) and at approximately 25 other core sites for a total of approximately 50 sites. The selection of these sites will be performed by the Administrator in consultation with the Regional Administrator and the States. Chemical speciation is encouraged at additional sites. At a minimum, chemical speciation to be conducted will include analysis for elements, selected anions and cations, and carbon. Samples for required speciation will be collected using appropriate methods and sampling schedule in accordance with procedures approved by the Administrator.

(b) Air pollution control agencies shall archive $PM_{2.5}$ filters for all other SLAMS sites for a minimum of 1 year after collection. These filters shall be made available for supplemental analyses at the request of EPA or to provide information to State and local agencies on the composition for $PM_{2.5}$. The filters shall be archived in accordance with procedures approved by the Administrator. Storage conditions will likely involve temperature control (1 to 4°C), and protection from light, vibrations, and dust sources.

7.14 Internal Quality Control

Keep a laboratory QC notebook or database (with disk backups), which should contain QC data, including the microbalance calibration and maintenance information, routine internal QC checks of mass reference standards and laboratory and field filter blanks, and external quality assurance (QA) audits. These data will duplicate data that are already recorded on laboratory data forms but will consolidate them so that long-term trends can be identified. It is recommended that QC charts be maintained on each microbalance and included in this notebook. These charts may allow the discovery of excess drift that could signal an instrument malfunction.

At the beginning of each weighing session, after the analyst has completed calibrating the microbalance and measuring the two working standards, weigh the laboratory and field blanks. Weigh enough laboratory blanks during a presampling weighing session to provide at least one laboratory blank during each subsequent postsampling weighing session. Weigh enough field blanks during a presampling weighing session to provide approximately 10% field blanks.

Reweigh at least one of the routinely exposed, sampled filters and the two working standards at the end of the weighing session.

Record the working standard, blank, and replicate measurements on the laboratory data form and in the laboratory QC notebook or database. If the working standard measurements differ from the verified values or the presampling values by more than 3 µg (i.e., three times the microbalance's repeatability), repeat the working standard measurements. If the laboratory blank or replicate measurements differ from the presampling values or previous postsampling values by more than 15 µg (i.e., three times the precision for unexposed filters), repeat the blank or replicate measurements. If the pre- and postsampling weights for the field blanks disagree by more than 30 µg, repeat the measurements. If the two measurements still disagree, troubleshoot and take appropriate corrective action as specified in the reporting organization's QAPP. Measurements for sampled filters should not be corrected to account for blank measurements. High blank values should not cause the automatic invalidation of sampled filters that were measured during the same weighing session. Instead, high blank values should trigger troubleshooting and corrective action to reduce blank values to acceptable levels.

If more than one microbalance is used, the pre- and postsampling measurements of the filter should be made on the same microbalance.

The QC or laboratory supervisor should certify on the laboratory data forms the acceptability of filter weighings and QC checks and the completeness of the data. The QC or laboratory supervisor should sign or initial each completed form. When bound together, these forms can serve as a laboratory data notebook.

8.0 Field Operation

8.1 Overview

Sampling operations provided in this section are independent of any one type of commercially available $PM_{2.5}$ sampler. Because operational procedures may vary among sampler models, consult the manufacturer's operations manual before the sampler is put into service. Sampling procedure checks are summarized in Table 8-1.

8.2 Activities to Perform Each Site Visit

This section reviews the steps taken during a site visit to prepare for and complete a sample run, sample validation criteria, and proper handling of the filter/cassette assembly. Also consult the sampling procedures checklist in Figure 3-3.

8.2.1 Beginning a Run

Care must be taken to ensure that the filter is clean and undamaged before it is installed in the sampler. The filter/cassette assembly should be kept in its protective container until installation; damaged filters must be placed in the protective container and returned to the weighing laboratory, where they will be examined and then discarded.

1. Annotate the following on a data sheet (or in a computer file) such as the Single-Filter $PM_{2.5}$ Sampler Run Data Sheet shown in Figure 8-1:

   Note: Figure 8-1 is merely an example data sheet for a single-filter sampler and assumes the data sheet will accompany the sample to the laboratory. Because sampler data are downloaded and archived, table entry of data relative to run start and end operating conditions may not need to be made.

   - Date and time of sampler setup visit
   - Site identification and location
   - Sampler model, unique sample ID number (this may be the cassette and/or filter ID number; or some other tracking number)
   - Sample start date and time
   - Unusual conditions that may affect samples (e.g., subjective evaluation of pollution on that day, construction activity, weather conditions)
   - Setup operator's signature or initials.

2. Ensure the sampler is not operating. If the sampler is set to automatically begin operation, ensure that enough time is available to complete these setup procedures before it starts.

3. Open the filter holder assembly according to the manufacturer's instructions. Visually inspect the O-rings inside the filter holder to ascertain that they are present and secure. Do not sample without these O-rings installed because the system will no longer be leak-free. Install the uniquely identified filter cassette containing the preweighed filter. Never remove

the filter from the cassette. This is done only at the filter weighing facility. Reinstall the filter cassette holder and ensure that the fittings around the impactor housing and the filter assembly are s ure.

4. The sampler is now ready to sample. If the sampler is not already set to turn on automatically for the next sampling period (generally at midnight), program the controls to do so.

5. Visually inspect the monitoring site and its equipment to ensure that all sampling components are ready for the next run day(s). Note any changes in the site surroundings, especially dust-producing activities.

6. Visually inspect the records of the sampler. If it is time for the monthly/every 4 weeks check, measure and record independent measurements of ambient temperature and pressure, and ensure that the ambient temperature (i.e., inlet temperature) and pressure readings taken by the sampler are within 4.0 °C and 10 mmHg of the independent readings, respectively. Be certain that the independent temperature sensor (thermometer or thermistor probe) is located side-by-side with the sampler's ambient temperature sensor. This will require that the sensor be placed in the louvers of the sampler's temperature screen and kept out of direct sunlight. Also check the sampler's display for the filter temperature and ensure this value is reasonable compared to the ambient temperature display.

8.2.2 Ending a Run

1. Visually inspect the sampler readouts to ensure that the sampler is operating properly. Sequential samplers require manipulation of a number of display screens to retrieve all data. Consult the operating manual. Also check the sampler for any other obvious problems, such as a full water collection jar. If problems are identified, describe them on the sample run data sheet and take corrective actions before starting another run. If the weather is bad, provide a temporary shelter to facilitate data transfer and to protect exposed parts of the sampler. A small work table may be useful.

2. Record the following information on the sampler run data sheet (or save it to a data file):
   - Date and time of postsampling site visit; then display the sampler readout or downloaded computer file and record
   - Stop time and total elapsed time of the sample run
   - Final flow rate, average flow rate, coefficient of variation of the flow rate, and total volume sampled
   - Sampler's indicated ambient temperature and barometric pressure at the end of the run
   - Also record, if your schedule calls for it, the current temperature, pressure, and flow rate of the sampler
   - Conditions at the site or of the collector that may have affected the sample
   - Any flags triggered by the sampler (e.g., power outage, flow rate variation)

Table 8-1. Sampling Procedure Checks

Procedure	Frequency and method	Requirements	Action if requirements not met
Filter installation ***(Never remove filter from cassette for inspection!)***	Visually check filter. Install filter in cassette, and securely close filter holder.	Filters must be uniquely identified, tare-weighed, undamaged, and in cassette.	Void the filter, and install substitute filter/cassette.
Sample validation and documentation	Visually check each sample and the keypad display or downloaded sampler data for completeness.	Record sampling date, filter and sampler ID, station location, flow rates, sample time, and unusual conditions on data sheet or computer screen.	Complete or correct the documentation. Cross out invalid information with a single line. Initial and date changes.
Postsample inspection	Visually check filters while in cassettes for tears, missing pieces, or leakage. Review sampler operation.	There should be no evidence of filter damage or sampler malfunction.	Flag the sample as questionable; correct the cause of malfunction.
Leak checks	Check for leaks when suspected or after every-fifth-sample-day service of WINS impactor.	Leak-check results must be within parameters specified by manufacturer.	Determine cause of leak and correct. Validate and/or calibrate the sampler flow rate.
Flow rate checks	Check flow rate at least every 4 weeks or once per month at each collector in the network.	Indicated sampler flow rate must be within ±4 percent of the measured flow rate.	Correct problems. Recalibrate the sampler if needed.
Field blank check	At least one field blank available per weighing session. Install, then immediately remove filter from sampler; store in protective container inside sampler case. Or preferably, install in idle single-filter sampler for 24 hours, then remove and process. For sequential samplers, install in unused holder.	Rotate from sampler to sampler so all are checked. Special requirements for sequential samplers: should have one or more field blanks with each batch of filters to be weighed. Refer to Section 7.0.	Reassess filter-handling techniques and storage conditions.

Single-Filter $PM_{2.5}$ Sampler Run Data Sheet

Date/Time of Setup Visit 8/7/97; 15:30 Date/Time of Postsampling Visit 8/11/97; 10:15

Site Identification NC-723 Site Name Research Triangle Park

Sampler Model O-A-2013 Sampler ID A1 Filter ID R691

Start Date 8/8/97 Stop Date 8/8/97 Well No. and Installation Date #4; 8/7/97

Start Time 00:00 (midnight) Stop Time 24:00 (midnight) Elapsed Time 24.0 hr

FIELD

Conditions at Time of Initial Site Visit 8/7/97; 15:30

Sampler: Indicated P_a: 752.2 mmHg Indicated T_a: 24.0 °C

Indicated Q: N/A L/min

Check Data (if scheduled): P_a 754 mmHg Measured using: Field barometer #4

T_a 24 °C Measured using: ASTM thermometer

Initial and Final Conditions (as retrieved from sampler screen or data storage, if available):

	Run Start	Run End	
Indicated P_a	754.0	758.4	mmHg
Indicated Q	16.64	16.60	L/min
Indicated T_a	22.4	23.5	°C
Indicated Q_{avg}	—	16.67	L/min
Indicated Q_{cv}	—	0.3	
Volume sampled	—	24.03	m^3

Sample Removal Date/Time 8/11/97 10:30 Sample Ship Date 8/11/97

Was Sample Shipped Cold? No ☑ Yes ☐ Questionable Sample? No ☑ Yes ☐ (If yes, explain in notes)

LABORATORY

Filter Information: Sample Receipt Date/Time 8/12/97 15:00

Filter ID: R691 Initial Weight: 139.293 mg Final Weight: 139.727 mg

Calculated Concentration: 18.06 μg/m^3 Interior Temp. of Filter Transit Container Upon Opening 22 °C

Notes:

Setup Operator: J. Jones 8/7/97 End Operator: A. Smith 8/11/97

Reviewed by: A. Boss 8/15/97

Figure 8-1. Example $PM_{2.5}$ sampler run data sheet.

- Explanations for questionable or voided samples
- End operator's signature or initials.

3. Download the runtime data for the completed run using a laptop computer or other data transfer device that may be specified in the particular sampler's operating manual.
4. Carefully open the sampler's filter holder assembly according to the manufacturer's instructions. If the filter cassette comes apart or sticks to the upper housing during this process, close and gently reopen the assembly. Do not allow the filter to be shaken, dropped, or touched by any foreign object (fingers, rain, and so on). Visually examine the filter and cassette for damage or unusual appearance. Make notes and then immediately place the filter cassette inside an appropriately marked protective container for storage and later transport to the weighing laboratory.
5. Inspect the interior of the filter housing and the sampler itself. Note any abnormalities on the sampler run data sheet.
6. Conduct any scheduled maintenance activities. Refer to Section 9.2.2 for details on impactor well inspection, cleaning, and/or replacement.
7. If another sampling run will be performed, install a filter cassette according to the instructions in Section 8.2.1, above, and the manufacturer's instructions.
8. Observe conditions around the monitoring site; note any activities that may affect filter particle loading (paving, mowing, fire) and record this information on the run data sheet. Retrieve equipment and documentation. Secure the site.

8.2.3 Sample Validation

Observations made by the site operator concerning the sampler's operation are most important in deciding if a sample is valid. Never discard a filter/cassette. Operators are encouraged to use data qualifiers or flags and to record free-form notes on the data sheet, in a site logbook, or on computer data entry screens. The final decision for invalidation will be made after the information provided by the operator and the filter/cassette itself are examined at the office or laboratory. Tight control of sampler operation is important because too many invalid samples could cause an entire quarter's data set to be lost. The following criteria have been established to assist the operator in determining whether or not a sample is valid:

1. **Timing**

   All samplers must operate for at least 23 but not more than 25 hours (1,380 to 1,500 min). Samples taken for less than 23 hours are invalid for the daily average but can be used to determine exceedances of the $PM_{2.5}$ standard. Samplers are programmed to stop whenever the filter becomes so heavily loaded that proper flow rate cannot be maintained.

2. **Flow Rates**

   The average flow rate for a 24-hour period must be within 5 percent of 16.67 L/min at actual conditions. If this limit is exceeded, investigate the cause. Use the following criteria as a basis for sample invalidation:

- Deviations in flow rate during sampling (due to mechanical failure) of more than 5 percent from the design value require a flow rate verification check. Refer to Section 8.3.2.3 for information. Remember to use a flow check filter, not one used for sampling. If the sampler's flow rate verification check indicates that the comparison did not meet the ±4 percent acceptance criteria, the sample may be questionable and should be flagged for potential invalidation.
- If the sampler flow rate decreased because of heavy particulate loading on the filter, the sample should not be invalidated because the heavy loading may indicate an episodic situation that deserves study.
- Changes in flow rate calibration of more than 4 percent, as determined by a monthly field flow rate verification check, may cause invalidation of all samples collected since the last acceptable flow rate check. Make corrections or repairs, verify the flow rate, and recalibrate the sampler if required.

3. **Filter Quality**

   A sample collected on any filter that has obviously been damaged (i.e., torn, frayed, or has pinholes) during the collection process should be invalidated. Return such a filter/cassette assembly to the office or laboratory with notes from its inspector.

4. **Filter Temperature**

   Based on the data downloaded from the sampler for the run, the filter temperature must be no greater than 5 °C above the ambient temperature for more than 30 consecutive min, based on 5-min averages. Take corrective action if it is.

8.2.4 Sample Handling

8.2.4.1 Handling a Valid Sample

1. The sample must be removed from the collector within 96 hours (4 days) of the end of the run. Promptly deliver the filter cassette in its protective container, accompanied by the completed run data sheet, to the analytical laboratory. Depending on whether the sample is shipped or transported at near-ambient temperatures or at 4 °C, the laboratory has from 10 to 30 days from the end of the run to determine the sample weight. Package and handle the samples to avoid vibrations that may dislodge particles. Do not allow the filter surfaces to touch any of the interior surfaces of the protective container. The container must be transported in an insulated container capable of maintaining a temperature of less than 25 °C (77 °F) unless the transit time to an air-conditioned building or refrigerator is only a few hours. If desired, the sample may be cooled to 4 °C by placing leak-proof ice substitutes inside the insulated container. Do not allow the protective container to become wet. Place a min/max thermometer or a liquid crystal temperature sensor strip inside the shipping container to verify that the sample(s) remained cool during transit to the laboratory. Handle field blank filters in the same manner.

8.2.4.2 Handling a Questionable Sample

1. Complete as much of the run data sheet as possible and explain any omissions.
2. Mark "questionable" on the run data sheet and record comments on the data sheet and/or in the site logbook.
3. Do not discard the filter.
4. Deliver the filter cassette in its container (as if it were a valid sample) and the run data sheet to the analytical laboratory, where a final decision on sample validity will be made. If your quality assurance (QA) program calls for it, notify the appropriate person of the potentially invalid sample.

8.3 Activities to Perform Every Five Operating Days

8.3.1 Impactor Well Cleaning

Cleaning of the impactor well is strongly recommended after every 5 days of operation. Also empty any water from the water trap, clean the sampler interior, inspect the seals, and reinstall the trap. Cleaning the well is necessary to prevent the sampler from operating with an overloaded $PM_{2.5}$ impactor. When operating in an area with higher PM_{10} concentrations, more frequent cleaning of the well may be necessary. Refer to Section 9.2.2 for impactor maintenance guidance.

Impactor wells may be cleaned at the field site. Take care to thoroughly clean the well and not to introduce contaminants. Others may prefer to have spare wells that can be cleaned in a laboratory or other indoor location. The well should be transported to the sampling site in an upright position. During transport, protect the well from excessive vibration, precipitation, direct sunlight, and other harmful environments. Likewise, the used well should be protected in transit back to the laboratory. It is recommended that wells be numbered or otherwise identified and records kept of their use.

In the case of sequential samplers in use every day, sampling may be interrupted for up to 1 hour without invalidating the day's sample. Exercise care not to contaminate the filter during the well cleaning or replacement process.

8.4 Activities to Perform Every Four Weeks

8.4.1 Flow Rate Verification Check

A flow rate verification check of the sampler flow rate is recommended every month. Control charts presenting flow rate verification check data (indicated vs. measured) should be maintained. These charts provide a reference of instrument flow rate drift patterns and indicate when flow limits (±4 percent) have been exceeded. The field check is made by installing a measuring device (which is traceable to National Institute of Standards and Technology (NIST) and calibrated within the range of the flow rate) on the inlet of the sampler. Calibration procedures for the measurement device are referenced in Section 6.3.4.

Calibration checks of the sampler flow rate require the instrument to be running. The following flow rate verification procedures are independent of any device. A variety of transfer standards

may be used with this procedure; however, the necessary apparatus and subsequent calculations to determine the sampler's flow rate will vary.

8.4.2. Field Check Apparatus

The following equipment is required for field calibration checks of temperature, pressure, and flow rate:

- A thermometer readable to the nearest 0.1 °C, capable of accurately measuring temperature to the nearest ±1 °C, and referenced to a NIST standard or an American Society for Testing and Materials (ASTM)thermometer within ±0.5 °C at least annually
- A barometer capable of accurately measuring ambient barometric pressure to the nearest ±1 mmHg and referenced to a NIST or ASTM barometer within ±5 mmHg at least annually
- An orifice device (or other acceptable flow measurement device) and calibration relationship
- The sampler's calibration information (an equation)
- A clean flow check filter, installed in a cassette
- A flow check data sheet (such as the example given in Figure 8-2) or the sampler's logbook.

8.4.3 Leak Check

Before conducting quality control (QC) field calibration checks of temperature, pressure, and flow rate, perform a sampler leak check as follows:

1. Insert the clean filter (designated the "leak check filter") into the sampler filter holder as described in the operating procedure in Section 8.1. Leak check filters should never be used for subsequent sampling. The same filter may be used for the leak check that was used for the flow rate verification check.
2. Remove the inlet and install the flow rate adapter on the top of the downtube (see Figure 6-2). Close the adapter valve to prevent air flow.
3. Perform the leak check procedure according to the specific instructions in the manufacturer's operating manual. Also refer to Section 6.6 of this document.

> **CAUTION**
>
> Open the flow rate adapter's valve slowly to prevent a sudden rush of air into the system, which could cause oil to splash from the impactor well onto the filter and other components.

4. If the sampler leak check is within acceptable limits as detailed in the operating manual, the sampler is operating properly and you may proceed with the temperature, pressure, and flow rate checks. If the limit is exceeded, investigate and correct any malfunction. If necessary, recalibrate the sampler before sampling is resumed.
5. Turn off the sampler, remove the flow audit device, and replace the inlet.
6. Remove the leak check filter from the filter holder. This filter is never reused for sampling

but, if carefully handled, may be used several times as a leak check filter.

$PM_{2.5}$ Sampler Flow Check Data Sheet

Date of Flow Check _____

Time of Flow Check _____

Site Identification _____ Site Name _____

Sampler Model _____ Sampler ID _____ Filter ID _____

Sampler Indicated P_a _____ mmHg T_a _____ °C Other P_a _____ mmHg T_a _____ °C

Unusual Conditions: _____

Flow Check Device _____ S/N _____ Calibration Date _____

Flow Check Device Calibration Relationship: m: _____ b: _____ r: _____

Measurement No.	Indicated Flow, L/min (Q_{ind})	Measured Flow, L/min (Q_{ref})
1		
2		
3		
4		
5		
Average		

Percent Difference from Reference Measured Flow Rate (a) _____

(a) Percent Difference = $[(\text{Average } Q_{ind} - \text{Average } Q_{ref})/\text{Average } Q_{ref}] \cdot 100$

Percent Difference from Design Flow Rate (b) _____

(b) Percent Difference = $[(\text{Average } Q_{ind} - 16.67)/16.67] \cdot 100$

Operator's Signature/Date _____

Reviewer's Signature/Date _____

Figure 8-2. Example $PM_{2.5}$ sampler flow check data sheet.

8.4.4 Procedure for Field Flow Rate Verification Check

1. Insert the clean filter (designated the "flow check filter") into the sampler filter holder as described in the operating procedure in Section 8.1. Flow check filters should never be used for subsequent sampling but, if carefully handled, may be used several times as a flow check filter.

2. Turn on the sampler and allow it to warm up to operating temperature (approximately 15 min).

3. Read and record the following information on a sampler flow check data sheet such as the example given in Figure 8-2.

   - Ambient temperature (T_a), °C (as indicated by the sampler's display)
   - Ambient temperature (T_a), °C (as indicated by the field check thermometer or thermistor)
   - Ambient barometric pressure (P_a), mmHg (as indicated by the sampler's display)
   - Ambient barometric pressure (P_a), mmHg (as indicated by the field check barometer)
   - Sampler ID number and model
   - Flow verification check device serial number and calibration relationships (if appropriate)
   - Date, location, and operator's signature.

4. Remove the inlet from the sampler downtube and replace it with the flow verification check device. The installation of an orifice/electronic manometer flow verification check assembly is shown in Figure 8-3. Allow time for the flow verification check device to reach ambient temperature

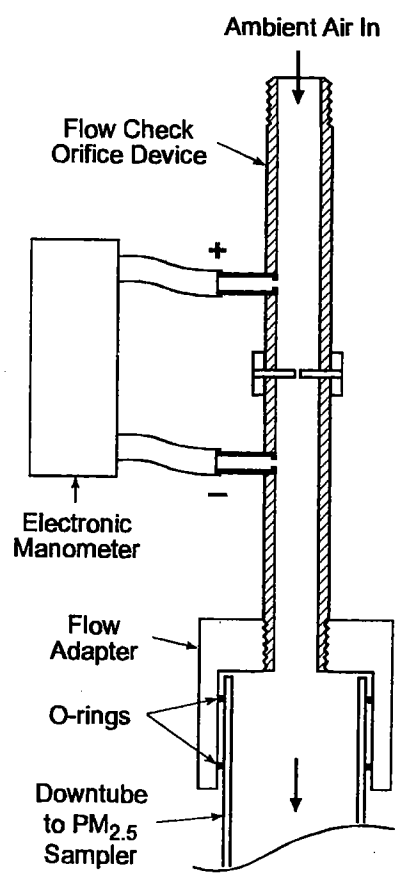

Figure 8-3. Example of installation of sampler flow verification check assembly.

before use.

5. Record the flow rate measured by the flow verification check device and the actual flow rate indicated by the sampler. This process be repeated for a total of at least five measurements if climate conditions permit. Take the average of the recorded measured flow rates and the average of the indicated flow rates.

6. Using the above information, calculate the percentage difference as:

$$\%\ difference = [(indicated_{avg} - measured_{avg})/measured_{avg}] \cdot 100\% .$$

7. If the sampler flow rate is within 96 to 104 percent of the measured flow rate (at actual conditions), **and** if the sampler flow rate is within 95 to 105 percent of the design flow rate of 16.67 L/min, the sampler is operating properly. If either limit is exceeded, repeat the leak check procedure, as stated in Section 8.3.2.2. After doing so, investigate and correct any malfunction. If necessary, troubleshoot the sampler further, recheck the flow, and, if necessary, recalibrate before sampling is resumed.

8. Turn off the sampler, remove the flow verification check device, and replace the inlet.

9. Remove the flow verification check filter from the filter holder.

10. Set up the sampler for the next sampling period according to the operating procedure in Section 8.1.

11. Have a supervisor or QC reviewer sign and date the sampler flow check data sheet.

9.0 Sampler Maintenance

9.1 Overview

Preventive maintenance is defined as a program of planned actions aimed at preventing failure of monitoring and analytical systems. The overall objective of a routine preventive maintenance program is to increase measurement system reliability and to provide for more complete data acquisition. This section addresses maintenance associated with reference or Class I equivalent $PM_{2.5}$ monitoring methods only. Maintenance of the laboratory microbalance and support equipment is not covered. Laboratories often employ a balance service representative who services balances on a 6-month or annual basis.

Some sampler maintenance can be performed at the field site. Major maintenance of the sampler or components, such as the pump, can be performed more conveniently when the equipment is brought to a laboratory or maintenance facility, provided time and labor are available to move the equipment.

A maintenance schedule should be established for each sampler and systematic records should be kept as scheduled and unscheduled maintenance occurs. Files should reflect the history of maintenance, including all replacement parts, suppliers, and cost expenditures and should include an inventory of on-hand spare equipment for each sampler.

Recommended supplies for all maintenance activities include an alcohol-based general-purpose cleaner that leaves no residue, cotton swabs, a small soft-bristle brush, paper towels, distilled water, and miscellaneous hand tools. Additional supplies may be necessary for specific procedures, as indicated below. Specifications for many of the supplies are given in Section 4.0, "Procurement of Equipment and Supplies." of this document. A compressed-air source is also recommended but not required.

All activities recommended below are in addition to those specified in the operating manual specific to the sampler and are not intended to replace those activities. Maintenance activities are summarized in Table 9-1.

Note: Always remove the impactor and filter cassette prior to removing the inlet downtube or cleaning any of the instrument parts upstream of these items. Such activities could dislodge dirt, oil, grease, or other materials that could deposit into the impactor well or onto the sampling filter. Temporarily store the impactor and filter cassette in a clean, dry location, away from contaminating materials (dust, dirt, rain, and so on) and direct sunlight.

9.2 Five-Day Maintenance Procedures

9.2.1 Water Collector

At least every 5 sampling days, inspect the water collector bottle. Remove accumulated water, clean the interior of the bottle, inspect the seals, and replace the bottle in the holder.

Table 9-1. Summary of $PM_{2.5}$ Sampler Maintenance Items

Frequency[a]	Maintenance item[b]
Every 5 sampling days	1. Service water collector bottle. 2. Clean or change-out impactor well.
Monthly	1. Clean sampler inlet surfaces. 2. Clean impactor housing and impactor jet surfaces. Examine O-rings. 3. Clean interior of sampler case. 4. Check sampler clock accuracy. 5. Check condition of sample transport containers.
Quarterly (every 3 months)	1. Inspect O-rings of inlet. Remove and lightly coat them with vacuum grease. 2. Clean sampler downtube. 3. Inspect and service water seal gasket where downtube enters sampler case. 4. Inspect and service O-rings of impactor assembly. 5. Inspect and service vacuum tubing, tube fittings, and other connections to pump and electrical components. 6. Inspect and service cooling air intake filter and fans.
Other periodic maintenance	1. As recommended by the manufacturer's sampler manual.

[a]Frequency may vary depending on climate, amount of particulate matter in the air, weather, and so on.
[b]Remove impactor and filter cassette before servicing any upstream sampler components.

9.2.2 Impactor Well

At least every 5 sampling days, disassemble and clean the impactor well (refer to Figure 9-1). If spare wells are available, cleaning can be done in the laboratory. Separate the upper and lower portions of the well, remove the used filter from the well, wipe the two halves of the well clean with lint-free laboratory tissues or cloth, put a new borosilicate glass filter in the well's bottom, and add 1 ± 0.1 mL of impactor oil. Check to be sure the oil covers the filter uniformly and there are no air bubbles beneath the filter. Reassemble the well and place it in the impactor. To reduce preparation time, several spare impactor wells should be prepared at one time and stored in a clean, dust-free container until needed.

9.3 Monthly Maintenance Procedures

9.3.1 Inlet

Figure 9-2 shows a disassembled sampling inlet. The inlet seals to the downtube with two O-rings.

If the water collector attached to the side of the inlet is glass, care should be taken during handling not to crack or break it because the sampler will not maintain an adequate vacuum

during operation then. The glass water collector may be either replaced with a plastic jar or wrapped with insulating tape to minimize the chance of accidental breakage.

To dismantle and clean the sampler inlet

- Mark each assembly point of the sampler inlet with a pen or pencil to provide "match marks" during reassembly. Critical assembly points are already "keyed."
- Disassemble the sample inlet unit according to Figure 9-2, taking care to retain all the parts. **Note:** If the assembly screws appear frozen, the application of penetrating oil or commercial lubricant will make removal easier.
- Using a soft brush, cloth, and cotton swabs, lightly scrub all interior surfaces and the bug screen with distilled water and/or the general-purpose cleaner. Pay particular attention to small openings and crevices. Cotton swabs and/or a small soft brush are most helpful in these areas. Using laboratory tissue and cotton swabs moistened with distilled water, wipe all surfaces to remove any remaining deposits. Completely dry all components.
- Check all the O-rings for distortion, cracks, fraying, lack of lubricating grease, or other problems. Apply a thin coating of vacuum grease or replace the O-rings as necessary.
- Reassemble the unit in accordance with the previously scribed match marks. Take particular care to ensure that all O-ring seals are properly sealed and that all screws are uniformly tightened.

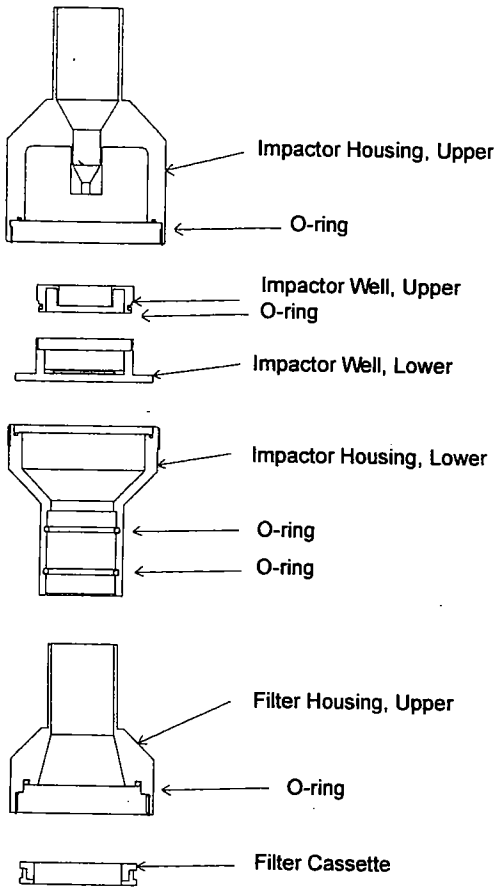

Figure 9-1. Exploded cross-sectional view of design of a $PM_{2.5}$ impactor well and filter holder.

9.3.2. Impactor Housing and Well

Figure 9-1 shows a typical disassembled impactor unit. With the impactor assembly open, inspect the interior of the impactor housing, both above and below the impactor well. These areas should

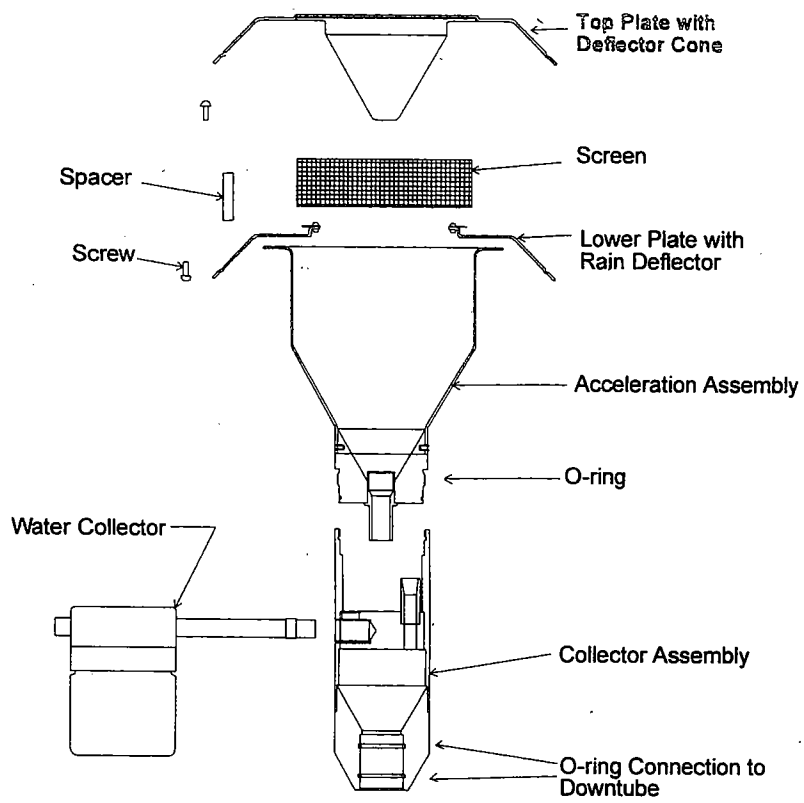

Figure 9-2. Exploded cross-sectional view of a PM $_{10}$ sampler inlet head.

be clean and dry. If necessary, clean the areas with a lint-free wipe. On a monthly basis, clean the interior of the impactor jet using a lint-free pipe cleaner or similar tool.

Check the O-rings for distortion, cracks, fraying, lack of a light coating of vacuum grease, or other problems and replace as necessary.

9.3.3 Other

Wipe down the interior of the sampler's case to remove bugs, dirt, and/or water deposits that may have collected inside the case. This procedure may be required more frequently during summer months. Inspect the cooling air intake filter and clean it if necessary.

Check the sampler's internal clock against a timepiece known to be accurate within 1 min/month.

Record the value and note whether the sampler's clock has gained or lost time since the previous month's time check.

Check the filter cassettes and the backing screens for fractures, cracks, buckling, evidence of wear, or contamination. Clean or replace as necessary.

Conduct leak test after reassembly.

9.4 Quarterly Maintenance

The following activities should be performed once every 3 months at the time of the regular monthly maintenance.

9.4.1 Inlet and Downtube

Inspect the O-rings in the aerosol inlet and condition them with a very light coating of vacuum grease. This will inhibit breakdown and fraying of the O-rings caused by friction on the inlet tube.

Inspect the outer and inner surfaces of the tip (closest to the sampler inlet) of the downtube, and remove any particulate deposits using isopropyl rubbing alcohol or water and a soft bristle brush or wads of lint-free laboratory wipes or cloth. Dry the downtube completely before reinstallation.

Inspect the rubber water seal gasket (located at the point where the downtube enters the sampling case) for cracks or other evidence of leakage. Lubricate or replace the gasket as necessary, according to the sampler's operating manual.

9.4.2 Impactor

Remove the O-rings in the impactor assembly and condition them with a light coating of vacuum grease.

9.4.3 Other

Examine the vacuum tubing for crimps, cracks, breaks, water, or dirt and replace as necessary.

Examine the tubing fittings to ensure proper seating and tightness.

Clean or replace the cooling air intake filter and fans as required.

9.5 Other Periodic Maintenance

As recommended by the manufacturer's sampler operating instruction manual.

9.6 Refurbishing $PM_{2.5}$ Samplers

$PM_{2.5}$ samplers that have been operated in the field for extended periods may require major repairs or complete refurbishment. In these cases, the manufacturer's manual must be referred to before work is undertaken. A sampler that has been subject to major repairs or refurbishment must be leak-checked and calibrated prior to sample collection. Such a sampler should be treated as if it were newly received.

10.0 Performance Evaluation Procedures

10.1 Overview

This section summarizes the performance evaluation (PE) procedures for assessing measurement uncertainty, precision, and bias for reference or class I Equivalent methods for $PM_{2.5}$ sampling at State and local air monitoring stations (SLAMS) sites. These requirements are specified in 40 *Code of Federal Regulations* (CFR)Part 58, Appendix A (EPA 1997). This section also gives suggestions for components of performance and systems audits of samplers, balances, and operational procedures that reporting organizations may wish to conduct in addition to those to be provided by the U.S. Environmental Protection Agency (EPA) Regional Office.

Table 10-1 consolidates the required and recommended PE components and lists the personnel

Table 10-1. Systems and Performance Evaluation Components for Manual Method $PM_{2.5}$ Samplers

	Component	Conducted by	Frequency	Performance goals
1.	Sampler flow rate audit. (a) Sampler display versus audit device reading. (b) Audit device reading versus designated flow rate (required).	Reporting organization	Quarterly for each sampler	(a) ±4 percent (b) ±5 percent
2.	Precision via permanently collocated sampler at 25 percent of sampling sites (required).	Reporting organization	Every 6 days	10 percent coefficient of variance (CV) for total precision
3.	Federal Reference Method (FRM) PE via 1 to 2 days collocation of an FRM sampler at 25 percent of sampling sites each year (required).	Reporting organization or EPA Regional Offices	Four times per year	±10 percent for total bias
4.	Balance systems and performance audits (recommended).	Reporting organization	Annually	Meet QAPP goals; agreement within 50 µg for 200-mg audit weight
5.	Sampler performance audits (temperature, pressure, flow rate) (recommended, based on quality assurance project plan [QAPP]).	Reporting organization	Per QAPP	Per QAPP
6.	Systems audit (required).	EPA Regional Offices	Once every 3 years	Meet CFR and QAPP goals
7.	Systems audit (recommended).	Reporting organization or State	Soon after network startup	Meet CFR and QAPP goals

responsible for conducting and reporting the results, the frequency at which the audits or checks are to be performed, and the performance goal.

For the PE components listed in Table 10-1 that are conducted by the State agency or reporting organization, it is expected that the agency or organization will include details in its QAPP and standard operating procedures (SOPs) that describe

- Conduct and reporting of the required quarterly sampler flow rate audits
- Operation and reporting of data from the required collocated samplers to estimate precision
- Any additional systems or performance evaluations it wishes to conduct.

In general, any PE or audit, whether conducted by personnel outside or within the monitoring network, should be conducted under the following guidelines:

- Without special preparation or adjustment of the system to be evaluated.
- By an individual with a thorough knowledge of the instrument or process being evaluated but not by the routine operator.
- With accurate, calibrated, National Institute of Standards and Technology (NIST)-traceable transfer standards that are completely independent of those used for routine calibration and QC flow checks (although both calibration standards and audit standards may be referenced to the same primary standard for flow rate, volume, temperature, pressure, or mass).
- With complete documentation of audit information. This documentation includes but is not limited to the types of instruments evaluated, the audit transfer standards and transfer standard traceability, the instrument model and serial numbers, the calibration information, and the collected audit data.

Overviews of the procedures for conducting performance and systems evaluations of the $PM_{2.5}$ collection and measurement processes are provided in these sections:

- Section 10.2, "Performance Evaluations" (sample flow rate audit, precision assessment, FRM PE, balance accuracy, and sampler operation audits)
- Section 10.3, "Systems Audits" (State or reporting organization audits, EPA Regional Office audits).

10.2 Performance Evaluations

This section presents performance audit procedures specific to reference or Class I equivalent $PM_{2.5}$ samplers that operate on the inertial impaction principle at a sample flow rate of 16.67 L/min. Procedures for auditing samplers that operate according to other principles (e.g., open-path optical monitors) are not discussed here. 40 CFR Part 58, Appendix A (EPA 1997) requires that reporting organizations assess, on a calendar quarterly basis, the flow rate accuracy of each primary (data-reporting) $PM_{2.5}$ sampler used in their SLAMS monitoring networks by conducting an audit of each sampler's operational flow rate.

Appendix A of 40 CFR Part 58 also requires reporting organizations to permanently collocate samplers at 25 percent of their sites to assess measurement system precision. Furthermore, the reporting organizations are required to assess total measurement system bias by making quarterly

side-by-side comparisons between the site's primary sampler $PM_{2.5}$ concentration results and those of an FRM PE sampler that is temporarily installed adjacent to the site sampler. This operation may be implemented by the EPA Regional Office.

This section also offers guidance to States or reporting organizations that may wish to incorporate internal audits into their $PM_{2.5}$ monitoring program. Internal performance audits are recommended for sampler flow rate, temperature, and barometric pressure. Balance audits are also suggested. Reporting organizations may elect to include an internal audit of the operational aspects of $PM_{2.5}$ samplers as part of their overall QAPP. The person conducting these audits should be someone other than the regular site operator. It is also important that the audit devices for flow rate, temperature, and barometric pressure not be the ones used for regular site checks and calibrations. However, the audit transfer standards may be traceable to the same primary standards as the working standards.

10.2.1 Sampler Flow Rate Audit

The calibration relationship between the flow rate (in actual L/min) indicated by the flow rate standard and the sampler's flow rate measurement device should be established or verified in accordance with the sampler's operation or instruction manual prior to the audit; however, no adjustments may be made to the sampler's flow rate sensors or controls before the audit is performed. A suggested audit data recording form is shown in Figure 10-1. For automated data acquisition, a printout may be attached to this and subsequent audit data sheets. The example audit data sheet shown in Figure 1-1 should be styled to include additional information as necessary. In conducting the sampler flow rate audit (or any audit for that matter) the auditor should consult the manufacturer's operations manual for sampler-specific procedures, suggestions, and precautions.

The audit of the sampler's flow rate consists of one measurement made at the sampler's operational flow rate. The flow rate transfer standard used for the audit must not be the same flow rate standard used to verify or calibrate the sampler but may have been made traceable to the same primary standard for flow rate or volume. The sampler's operation or instruction manual should provide specific instructions for using the instrument's flow rate readout or display. The audit is performed by the operator or by personnel from the quality assurance (QA) unit of the reporting organization as follows:

1. Install a flow rate audit filter/cassette in the filter holder and energize the sampler. Filters used for flow rate audits should not be used further for sampling. If the network's sampling schedule is on a daily basis or if loss of a sampling day cannot be accommodated, a flow rate audit may be conducted during a sampling event provided that
   - The active sampling filter is removed and protected from contamination and damage by storing it in a clean container between uses
   - A flow rate audit filter is used for the audit
   - The active sampling period is not interrupted for more than 1 hour in order to achieve a minimum overall sampling period of 23 hours.
2. Allow the sampler to warm up for a minimum of 15 min to allow the sampler's electronics

and vacuum pump to stabilize.

3. Record the sampler's flow rate as the "sampler flow rate before audit" on an audit data sheet, such as the example given in Figure 10-1.

4. Complete the required information at the top of the sampler audit data sheet (Figure 10-1).

5. Remove the sampler inlet and install the flow rate adapter device (refer to Figure 6-2).

6. Connect the adapter to the flow rate transfer standard outlet with flexible tubing, being careful not to crimp the tubing. Refer to Figure 8-3 for an example of the setup. If the transfer standard is electronic (such as an electronic micromanometer coupled to an orifice device), allow sufficient warmup time, based on one's prior experience with the device, for readings to stabilize.

7. Recheck the flow rate indicated by the $PM_{2.5}$ sampler's data display or other readout device. Record this value and the corresponding flow rate indicated by the audit device.

8. Record at least three sampler and audit flow rate readings of the output data directly on the audit data sheet (Figure 10-1). If electronic recording devices are used for one or more of the parameters, be sure that the clocks are synchronized. If units other than actual flow are displayed by the audit device, the ambient temperature and barometric pressure will have to be independently determined and calculations will have to be made to express results at ambient conditions. See Section 10.2.1.1 for calculation methods. Record all results on the data sheet and average them. Also compare the audit flow rate with the designated flow rate, 16.67 L/min.

9. Calculate the average difference in flow rate in L/min and as a percentage of the audit flow rate. Record all data for eventual submission to the EPA Aerometric Information Retrieval System (AIRS) database.

10. Following the measurement with the flow rate standard, remove the adapter and reinstall the sampler inlet. From the sampler's display, read the sampler's operating flow rate again (in L/min) with the flow rate filter in place. Record this as the "sampler flow rate after audit" on the audit data sheet. Remove the flow rate audit filter. Do not use it for further sampling; it may be used several more times for flow rate audits of the same model sampler, provided it is carefully stored between uses to prevent contamination or damage. Stop using this filter when a buildup of particles on the filter surface is visible.

11. Replace the sample filter if it was removed in the midst of a sampling event. Otherwise, return the sampler to its pre-audit condition.

10.2.1.1 Flow Rate Audit Data Calculations

$PM_{2.5}$ flow rate audit results should be reported at ambient conditions and should not be corrected to standard conditions (e.g., 25 °C, 760 mmHg). However, for some types of audit devices, it may be necessary to correct the indicated audit flow rates to ambient conditions. Equation (10-1) may be used to make this correction. The following correction should be applied only if the audit device reports flow rate already corrected to standard conditions (e.g., mass flowmeters). Be sure to verify the standard conditions of temperature and pressure (T_{std} and P_{std}, respectively) applicable to the audit device.

$PM_{2.5}$ Sampler Audit Data Sheet
Flow Rate, Temperature, and Pressure Audit

Site Name. _____ Site Location. _____

Auditor's Name. _____ Observer's Name. _____

Sampler Model: IO-2001 Sampler ID: R-102

Flow Rate Audit Device Manufacturer, Model, Serial Number: Orifice device, S/N 104, coupled to electronic digital micromanometer

Temperature Audit Device Manufacturer, Model, Serial Number: Thermistor temperature probe, S/N T01562-53

Pressure Audit Device Manufacturer, Model, Serial Number: Hand-held aneroid barometer, S/N 420292

Flow Rate Audit: Date of Test: 8/13/97

Sampler flow rate before audit 16.65 L/min Sampler flow rate after audit 16.72 L/min

Sampler's Indicated Flow Rate, L/min	Audit Flow Rate, L/min	Difference (Sampler - Audit), L/min	Difference ÷ Audit Flow, %
16.72 16.65 16.74	16.59 16.51 16.61		
16.70 Avg.	16.57 Avg.	0.13	0.8%

Temperature Audit: Date of Test: 8/13/97

Sampler's Indicated T_a, °C		Audit T_a, °C		Difference (Sampler - Audit), °C	
Inlet	Filter	Inlet	Filter	Inlet	Filter
33.7 33.8 33.7	34.5 34.6 34.5	33.1 33.2 33.0	34.7 34.8 34.7		
33.7 Avg.	34.5 Avg.	33.1 Avg.	34.7 Avg.	0.6	-0.2

Pressure Audit: Date of Test: 8/13/97

Sampler's Indicated P_a, mmHg	Audit P_a, mmHg	Difference (Sampler - Audit), mmHg
759 761 758	760 760 759	
759 Avg.	760 Avg.	-1

Notes: Attach additional sheets, if necessary.
Show calculations on attached sheets.

Figure 10-1. Example $PM_{2.5}$ Flow rate, temperature, and pressure audit form.

$$Q_a = Q_{std}(T_a/P_a)\ (P_{std}/T_{std}) \qquad (10\text{-}1)$$

where

Q_a = flow rate at actual conditions, L/min
Q_{std} = flow rate reported at standard temperature and pressure (e.g., 25 °C, 298 K; 760 mmHg or 101 kPa), L/min
T_a = ambient temperature, K
P_a = ambient barometric pressure, mmHg or kPa
P_{std}, T_{std} = standard barometric pressure and temperature, respectively.

Determine the percentage difference between the sampler-indicated flow rates and the audit-measured flow rates using Equation (10-2). Record the result on the audit data sheet. Any deviation greater than ±2 percent may require recalibration.

$$\%\ difference = 100 \times (Q_a(\text{sampler}) - Q_a(\text{audit}))/Q_a(\text{audit}) \qquad (10\text{-}2)$$

10.2.2 Temperature Audit Procedures

Ambient temperature, filter temperature, and ambient pressure sensors on the $PM_{2.5}$ sampler may be audited in conjunction with the flow rate audit. Make no adjustments to the sampler prior to recording all audit results. Record the audit data on a form similar to the one shown in Figure 10-1.

The recommended procedure for auditing temperature probes is to use a bath of water, oil, or other suitable liquid to provide a stable temperature. A container such as a thermos bottle or Dewar flask should be used to insulate the bath, minimizing heat transfer to and from the fluid in the flask. Temperature sensors and thermometers should never be used to stir the bath. If water is used for the bath, be sure that evaporative cooling does not cause the temperature in the bath to fall during the audit process. A minimum of three temperatures should be used for the audit. Details of temperature calibration procedures are found in Section 6.0, "Calibration Procedures," of this document and can be adapted for audit purposes. Record the stabilized temperature reading and report the results on a data sheet such as the one shown in Figure 10-1. Any deviation greater than 2 °C should be reported for corrective action.

10.2.3 Barometric Pressure Audit Procedures

Ambient pressure is audited using a suitably calibrated sensor at ambient conditions. Refer to Section 6.0 of this document for information on establishing traceability and the use of portable barometers. Record all findings on an audit data form or in a bound notebook. Any deviation greater than 10 mmHg should be reported for corrective action.

10.2.4 Assessment of Precision Using Collocated Samplers

Collocated sampler results, where the duplicate sampler is not necessarily a reference method sampler but a sampler of the same designated method as the primary sampler, are used to assess measurement system precision according to the schedule and procedure specified in 40 CFR Part 58, Appendix A, Section 3.5.2. The regulations require that 25 percent of a reporting organization's primary samplers have another sampler (termed the duplicate sampler) permanently collocated at the same site and collect a sample on at least an every sixth day schedule so that the

primary and duplicate samplers capture samples from all days of the week throughout the year. The site locations for the duplicate samplers are decided by choosing those sites that are most likely to have higher concentrations of $PM_{2.5}$ or that have been found to be in violation of the National Ambient Air Quality Standards (NAAQS) during initial studies. Refer to 40 CFR Part 58, Appendix A, Section 3.5.2 for details. The collocated sampler measurements will be used by EPA to calculate quarterly and annual precision estimates for each primary sampler and for each designated method employed by each reporting organization. A data quality objective (DQO) of 10 percent CV or better has been established for the operational precision of $PM_{2.5}$ monitoring data.

10.2.4.1 Procedure for Collocated Measurements

The collocated sampler must be kept clean, serviced, and inspected frequently for proper operation, and the calibration of its flow rate, temperature, and pressure measurement systems must be checked and verified at the same intervals as the primary sampler.

The station's primary site collector and the duplicate sampler must be located at least 1 m but no more than 4 m apart, and their inlets should be at the same height above ground and within 1 m of each other as measured in the vertical direction. Space either sampler at least 2 m away from a high-volume sampler. The samplers must be calibrated and operated according to their operations manuals, and the samples must be stored, shipped, and analyzed identically, as described in the sampler's operation or instruction manual and in general accordance with the guidance in this handbook and in the reporting organization's QAPP and standards of procedure. The primary sampler must be operated during the comparison period as closely as possible to the way it operates during normal sampling or monitoring. Collocated sampling should be conducted during a regularly scheduled sampling period whenever possible.

The concentrations determined from the site's primary sampler and from the collocated, duplicate sampler are to be reported to EPA as directed in 40 CFR Part 58, Appendix A, Section 4. **Note:** All collocated measurements must be reported, even those that might be considered invalid because of identified malfunctions or other problems that occurred during or following the sample collection period. Although all measurements must be reported, only those sample pairs having $PM_{2.5}$ concentrations above 6 $\mu g/m^3$ will be selected for use in precision calculations because at low concentrations agreement between the measurements of collocated samplers may be relatively poor.

10.2.5 Federal Reference Method Performance Evaluation

Because the size and volatility of the particles making up ambient particulate matter vary over a wide range and the mass concentration of particles varies with particle size, it is difficult to define the accuracy of $PM_{2.5}$ measurements in an absolute sense. The accuracy of $PM_{2.5}$ measurements is therefore defined in a relative sense, referenced to measurements provided by the FRM. Accuracy is defined as the degree of agreement between a subject field $PM_{2.5}$ sampler (the primary sampler) and a collocated FRM PE sampler operating simultaneously at the monitoring site and totally independent of the site operations with respect to operator, sampler, sample handling, and weight determination. Audit results include both random (precision) and systematic (bias) errors.

The EPA Regional Offices are responsible for conducting the FRM PEs to assess total measurement system bias. The reporting organization is responsible for assisting FRM PE personnel by coordinating schedules and assisting in the setup of the FRM sampler, which will be on site for approximately 2 days.

Twenty-five percent of SLAMS $PM_{2.5}$ primary samplers within each reporting organization will be assessed with an FRM PE every calendar year so that in a 4-year span all FRM or Federal Equivalent Method (FEM) samplers will have been audited. Further, every designated FRM or FEM within a reporting organization must

- Have at least 25 percent of each method designation audited, including those at collocated sites (even those collocated with FRM samplers used in the precision assessment program)
- Have at least one sampler audited
- Be audited at a frequency of four audits per year.

Details of the schedule for performing collocated measurements with the FRM sampler and guidelines for determining the initial deployment of FRM PE samplers based on sites likely to be in violation of the NAAQS are provided in 40 CFR Part 58, Appendix A, Section 3.5.3. The results from the primary sampler and the duplicate FRM sampler are used by EPA to calculate the accuracy of the primary sampler on a quarterly basis, the bias of the primary sampler on an annual basis, and the bias of a single reporting organization on an annual basis.

10.2.6 Balance Accuracy Assessment

Each State or reporting organization should conduct an internal accuracy assessment of each microbalance on an annual basis. A performance audit of the microbalances used to weigh $PM_{2.5}$ filters requires the use of an independent set of American Society for Testing and Materials (ASTM) Class I standard weights traceable to NIST with a tolerance of no more than 0.010 mg. Weights of 100 and 200 mg are suggested. These weights must not be the same ones used as working standards for the day-to-day operation of the microbalance but may be traceable to the same primary standard used to trace the working standards. Because microbalances are extremely delicate instruments and should not be operated by inexperienced personnel, it is recommended that the PE of the filter-weighing process be done in cooperation with the laboratory personnel. The person normally performing the weighings for $PM_{2.5}$ monitoring should assist the auditor by preparing the balance as if a series of filter weighings were to be done. Record all data on data sheets or in the laboratory's balance notebook. The balance display should agree with the designated value of the audit weight to within ±0.020 mg (twice the tolerance for an ASTM Class 1 weight).

Many laboratories maintain an agreement with a service representative to conduct regular servicing of the balances. It may be instructive to conduct a performance audit prior to the periodic servicing and again immediately after the servicing.

10.3 Systems Audits

Periodic systems audits of $PM_{2.5}$ programs are strongly recommended. Such audits may be particularly important at the startup of a new monitoring effort and can help recognize and

pinpoint problems before significant parts of data are affected. Loss of data could cause a reporting organization's airshed to fall into a nonattainment classification. The EPA Regional Offices are charged with conducting a systems audit once every 3 years. These audits are designed to assess the entire measurement system and data management activities with regard to $PM_{2.5}$ monitoring networks. These activities would include the following:

- Initial equilibration, weighing, and transportation of the filters to the sampler
- Site selection criteria assessment
- Equipment installation
- Site security
- Equipment maintenance
- Calibration procedures
- Handling and placement of the filters
- Operation of the sampler and sample collection
- Removal, handling, and transportation of the filter from the sampler to the laboratory
- Weighing, storage, and archival of the sampled filter
- Data analysis and reporting.

EPA specifies that QA and QC programs follow the requirements for QAPPs contained in the EPA document *Requirements for Quality Assurance Project Plans for Environmental Data Operations*, EPA QA/R-5 (EPA 1994). Auditors should develop a checklist based on these guidelines and on the specific information regarding $PM_{2.5}$ monitoring in this QA handbook.

Effective system auditing requires the auditor to observe the auditee's entire sample acquisition and analysis system and the associated data processing operations. These location include the sampling site, laboratory, the shipping and receiving area where field samples are received and logged in, the sample archival area, and the data processing areas.

Data about specific samples obtained during on-site performance audits may be useful during the systems audit. Tracking specific samples and the associated data completely through the system (sample acquisition, shipping, receiving, logging in, weighing, archiving, data processing, and reporting) ensures that every significant operation is examined. This approach also allows the auditor to look at the "interfaces" between different operations—the interactions between field and laboratory tasks—and not just the individual tasks in isolation. Detailed and summary reports and data submitted to EPA databases (e.g., AIRS) for the audited period should be reviewed as a follow-up to the audit, if the timing of these reports permits.

Effective preparation for a systems audit requires developing a checklist similar to the one shown in Figure 10-2. Auditors are encouraged to develop their own checklists based on their experience and as dictated by the individual audit situation.

Checklist for $PM_{2.5}$ Auditing

Site or Laboratory Location _____ Site Designation _____

Auditor Name and Affiliation _____

Observer(s) Name and Affiliation _____

Audit Question	Y	N	N/A	Comment
On Site:				
• Are logbooks and required data sheets filled in promptly, clearly, and completely?				
• Are filters handled with the necessary care and finesse to avoid contamination and/or loss of material? Does the operator keep the filter-handling area neat and clean?				
• Is the equipment sited properly? Are there any changes at the site that might compromise original siting criteria (e.g., fast-growing trees or shrubs, new construction)?				
• Does the equipment appear to be well maintained and free of dirt and debris, bird/animal/insect nests, excessive rust and corrosion, etc.?				
• Are the walkways to the station and equipment kept free of tall grass, weeds, and debris?				
• Is the station shelter (if any) clean and in good repair?				
Sampler Calibration and Maintenance:				
• Does the flow rate standard used for routine flow rate calibration have its own certification traceable to a NIST primary standard for volume of flow rate?				

(continued)

Figure 10-2. Example systems audit questionnaire.

Audit Question	Y	N	N/A	Comment
Sampler Calibration and Maintenance (continued):				
• Is the calibration relationship for the flow rate standard (e.g., an equation, curve, or family of curves relating actual flow rate [Q_a] to the flow rate indicator reading) accurate to within 2 percent over the expected range of ambient temperatures and pressures at which the flow rate standard may be used? Verify by inspecting the original calibration data and calculating the error in the calibration relationship for each calibration point used to generate the relationship.				
• Is the flow rate standard used for routine sampler calibration/verification recalibrated or reverified against a NIST-traceable standard at least annually?				
Balance Maintenance and Weighing Procedures				
• Is the filter preparation and weighing area neat and clean?				
• Are logbooks kept up to date and properly filled in?				
• Is the balance on a service agreement for regular professional maintenance? If not, is there someone in the organization with the appropriate training to service the balance?				
• Does the analytical balance used to weight filters have a readability of ±1 µg?				
• Is there a formal logbook or file for balance maintenance? Are entries current?				
• Are regular (e.g., daily, when in use) calibration checks made and recorded?				
• Are filters conditioned immediately before both the pre- and postsampling weighings? The following conditions are specified in 40 CFR Part 58, Appendix L:				

Mean temperature:	20–23 °C.
Temperature control:	±2 °C over 24 hours.
Average humidity:	30 to 40 percent relative humidity (RH); however, where it can be shown that the mean ambient RH during sampling is between 20 and 30 percent, conditioning is permissible at a mean RH within ±5 percent of the mean ambient RH during sampling.
Humidity control:	±5 percent RH over 24 hours.
Conditioning time:	Not less than 24 hours.

• Are new filters placed in the conditioning environment immediately upon arrival and stored there until the presampling weighing?				

(continued)

Figure 10-2. (continued)

Audit Question	Y	N	N/A	Comment
Balance Maintenance and Weighing Procedures (continued):				
• Is the analytical balance located in the same controlled environment in which the filters are conditioned?				
• Are the filters weighed immediately following the conditioning period without intermediate or transient exposure to other conditions or environments?				
• Are filters conditioned at the same environmental conditions before both the pre- and postsampling weighings?				
• Are both the pre- and postsampling weighings performed on the same analytical balance, using an effective technique to neutralize static charges on the filter?				
• Are both weighings perfromed by the same analyst? (If not, have results of the different analysts been compared statistically?)				
• Are presampling weighings done within 30 days of the sampling periods in which filters are to be exposed? (Review logbook to look for evidence of filters that exceed their time span.)				
• If filters are stored at ambient temperature, are the post-sampling conditions and weighings completed within 240 hours (10 days) after the end of the sample period?				
• If filters are stored at 4 °C or below during the entire time between retrieval from the sampler and start of conditioning, are the postsampling conditioning and weighings completed within 30 days after the end of the sample period?				
• Are new field blank filters weighed along with the pre-sampling (tare) weighing of each lot of $PM_{2.5}$ filters?				
• Are QC field blank filters routinely used, observing the following handling steps: transport to the sampling site, installation in the sampler, retrieval from the sampler (without sampling), and reweighing?				
• Are QC laboratory blank filters weighed along with the pre-sampling (tare) weighing of each set of $PM_{2.5}$ filters and reweighed when the exposed filters are received from the field? (These laboratory blank filters should remain in the laboratory in protective containers during the field sampling and should be reweighed as a QC check.)				
• Was the balance calibrated as specified by the manufacturer at installation and recalibrated immediately prior to each weighing session?				

(continued)

Figure 10-2. (continued)

Audit Question	Y	N	N/A	Comment
Recordkeeping and Calculations:				
• Are logs and/or charts of the balance room temperature and humidity on file?				
• Are records of shipments (incoming and outgoing) maintained?				
• Are records of sample filter condition upon arrival at laboratory kept (i.e., temperature)?				
• Are data management files in order?				
• Is there evidence that data validation, internal QA review, and complete data reporting have occurred?				
• Is the personnel management structure sound?				

Figure 10-2. (continued)

11.0 Calculations, Validations, and Reporting of $PM_{2.5}$ Monitoring Data

11.1 Overview

This section presents the calculations required to compute and report ambient $PM_{2.5}$ concentrations. A summary of all calculation formulas is given in Table 11-1. The end result of these calculations is the integrated (average) $PM_{2.5}$ mass concentration during the sampling period, expressed in units of $\mu g/m^3$. To obtain this concentration, it is necessary to determine the mass of particles collected by the filter and the total volume of air that was sampled. Unlike many other pollutant measurements, the volumes used to calculate the $PM_{2.5}$ concentration **must** always be expressed at the **actual** ambient temperature and pressure used to acquire the sample (40 CFR Part 50.3, as amended 6/28/97). This process represents a change from the convention used to report PM measurements prior to June 1997, in which volumes were adjusted to "U.S. EPA-standard" conditions, defined as 25 °C (298 K) and 760 mmHg (101 kPa).

Accurate measurement and control of the sampler's flow rate are needed to determine the total sampled volume and to ensure that the particles trapped by the filter are in the correct particle size range. Reference samplers and Class I equivalent samplers separate $PM_{2.5}$ particles by inertia. Obtaining the correct particle size range by inertial separation requires maintaining the correct air velocity in the sampler's size separator system (impactor). This velocity is correct when the specified design flow rate is maintained.

11.2 Calculations

11.2.1 Sample Volume Calculations

Both reference and equivalent method samplers are required to provide measurements of the total volume of air sampled (V_a), in m^3 at the actual ambient temperatures and pressures during sampling (40 CFR Part 50, Appendix L, paragraph 7.4.5.2). If the sampler's flow measurement system is properly calibrated, V_a should be accurate, and no further sample volume calculations are required.

Table 11-1. Formulas for Calculations Associated with $PM_{2.5}$ Monitoring

Calculation	Formula	Equation No.	Section
Alternative calculation of total sample volume, used only if V_a is not available directly from the sampler	$V_a = Q_{avg} \times t \times 10^{-3}$	11-1	11.2.1
Determination of $PM_{2.5}$ mass collected on filter (net weight)	$M_{2.5} = (M_f - M_i) \times 10^3$	11-2	11.2.2
Determination of $PM_{2.5}$ mass concentration	$PM_{2.5} = M_{2.5}/V_a$	11-3	11.2.3

Note: In the event the total sample volume measurement from the sampler is not available, the total sample volume may be calculated by multiplying the average flow rate, in actual m^3/min, by the elapsed sample collection time in minutes. Both of these measurements are required to be provided by reference and equivalent method samplers. Use the following formula only if V_a is not available directly from the sampler:

$$V_a = Q_{avg} \times t \times 10^{-3} \qquad (11\text{-}1)$$

where

V_a = total sample volume, actual m^3
Q_{avg} = average sample flow rate over the sample collection period, L/min
t = total elapsed sample collection time, min
10^{-3} = units conversion (m^3/L).

For example, a sampler with an average flow rate of 16.7 L/min (Q_{avg}) for a 1,410-min (23.5-hour) sampling period (t) would have a total sample volume (V_a) of 23.5 m^3.

11.2.2 Net $PM_{2.5}$ Mass Calculation

The mass of particulate matter collected on the filter during the sampling period is determined by subtracting the initial (tare) mass of each filter from the final mass of the filter, as

$$M_{2.5} = (M_f - M_i) \times 10^3 \qquad (11\text{-}2)$$

where

$M_{2.5}$ = total mass of $PM_{2.5}$ collected during the sampling period, µg
M_f = final mass of the equilibrated filter after sample collection, mg
M_i = initial (tare) mass of the equilibrated filter before sample collection, mg
10^3 = units conversion (µg/mg).

For example, a filter that weighed 139.293 mg before sampling (M_i) and 139.727 mg after sampling (M_f) would have a $PM_{2.5}$ mass ($M_{2.5}$) of 434 µg.

11.2.3 $PM_{2.5}$ Concentration Calculation

Each $PM_{2.5}$ mass concentration measurement is calculated by dividing the total mass of $PM_{2.5}$ (Equation 11-2) collected during the sampling period ($M_{2.5}$) by the total volume of air sampled (V_a) (taken directly from the sampler readout display or calculated from Equation 11-1), as

$$PM_{2.5} = M_{2.5} / V_a \qquad (11\text{-}3)$$

For example, a sample with a mass ($M_{2.5}$) of 434 µg collected from a total sample volume (V_a) of 23.5 m^3 corresponds to a $PM_{2.5}$ concentration ($PM_{2.5}$) of 18.5 µg/m^3.

11.3 Verification of Manual Calculations and Data Entry

This section applies to calculations performed using manually recorded or transcribed data and when hand calculators, computerized spreadsheets, or other calculation aids are used by field

operators or weighing technicians. This section also describes verification procedures for data keyed from handwritten forms into a computer.

11.3.1 Verification of Manual Calculations

Calculations should be verified when new sites are set up, when new personnel are trained, and when calculation aids such as spreadsheets are changed or updated. These calculations should be reverified periodically as part of the regular audit program. The basic procedure for verifying manual calculations is as follows:

- Gather the raw data sources to be checked. These might include the analyst's notebook or the field operator's report sheets on which the data were originally recorded.
- Obtain a copy of the resulting data report. The report should represent the data after they have been entered into the monitoring agency's electronic data system. This will ensure that all sources of human error, including keying errors, are included in the check.
- Independently verify the results based on the raw data. If calculation aids were used, do not use the same spreadsheet or calculator program that was originally used; the verification calculations should be done as independently as possible.
- Verify that the correct formulas, conversion constants, and reporting units were used.

The amount of data to be recalculated and verified depends on several factors. If the original calculations are suspect (for example, where mistakes have been found in a certain individual's work), all the questioned results should be recalculated. When there is no reason to suspect widespread errors, as with recalculations done as part of a routine audit, only a percentage of the data set need be checked initially. A commonly used audit guideline is to check 7 percent of manual calculations, provided that at least one example of each type of calculation is checked. This is a flexible guideline that depends on the amount of data to be checked and other factors. A cross-section of data should be selected for checking (e.g., the first and last values in a data set, extreme values, atypical values). The monitoring agency's Quality Assurance Project Plan (QAPP) should describe the frequency of these verifications, procedures to be followed, acceptance criteria, and corrective actions.

11.3.2 Verification of Manual Data Entry

Two methods are typically used for keystroke data entry quality control (QC): duplicate keying and proofing. Duplicate keying is defined as data entry by two different operators, followed by resolution of all discrepancies by referring back to the original forms. Proofing refers to manual (visual) comparison of data entered by a single operator against the original forms. The person who proofs the data should not be the person who entered it originally. Duplicate keying is far more likely to eliminate simple keystroke mistakes than proofing. It is also more cost-effective for large data sets but requires somewhat more work to set up initially.

If a data set has not been entered by the duplicate keying technique, a certain percentage of residual errors is to be expected. Keystroke data entry error rates can be estimated by comparing the original report pages or logbooks to the data reported out of the data system. The end use of the data should be considered in determining whether the error rate is unacceptably high. For

example, if the data will be used for purposes of compliance or litigation, any avoidable errors may be considered unacceptable. In such a case, the data should be rekeyed as described above.

If a data set has been entered by an effective duplicate keying procedure, simple keystroke errors are expected to be virtually nonexistent (less than 1 in 1,000,000, even with key operators of modest ability). If a check of duplicate-keyed data turns up a significant error rate, the integrity of the duplicate keying procedure should be investigated by examining the Standard Operating Procedure (SOP) for deficiencies. If no procedural problems are found, noncompliance with the SOP or hardware problems should be investigated.

In addition to typographical errors, other potential sources of data entry errors should also be considered while performing an audit of data entry. These include poor handwriting on the original data forms and smears or water damage that renders the writing difficult to read. Hardcopy records must be maintained for a period of time so that audits and verification checks can be performed. The monitoring agency's QAPP should describe the policies regarding verification of manual data entry, audit frequency, and retention policies for original records needed to verify the electronic data.

11.4 Validation

11.4.1 Data Validation

Validation of monitoring data is an extensive topic that can only be touched on in this section. The general principles are presented in Volume I of this series. Validation data screening is done for two primary reasons:

- To verify that the data have been recorded, entered, and calculated correctly—Validation screening can sometimes be used to identify problems such as failing equipment, siting problems, or operator errors.
- To screen for potential outliers (data points that are exceptional in concentration value or in some other way)—Data points identified as potential outliers are not necessarily invalid; validation screening simply identifies data points for further investigation.

For example, if the field sampled filter transport temperature is between 4 and 25 °C, but is below the maximum temperature that was recorded during the filter sampling period, consider that this condition was never intended, by the authors of the method, to, necessarily, and by itself, to be a cause for invalidating the resulting PM2.5 concentrations. The appropriate decison maker should take into the decision all other QC and QA data relevant to the decision.

Data validation can be done in several different ways. A combination of techniques is often the most effective. The exact criteria to be applied and corrective actions taken should be described in the agency's QAPP. Some techniques that may be applicable to $PM_{2.5}$ data validation are the following:

- Graphing and visually examining time series of operating parameter data such as flow checks (e.g., control charting)
- Graphing and visually examining scatter plots of data (e.g., duplicate sample results)

- Range checking (does the data fall within an expected range of values?)
- Statistical checking (flagging data points outside 3-sigma or other statistically derived limits)
- Evaluation of goodness of fit and linearity (applicable to linear regression data such as calibrations)
- Regular review of operators' notes and communication with operators to identify problems
- Review of audit results to identify data potentially impacted by audit findings.

Being flagged as a potential outlier by the methods listed above is **not** *prima facie* evidence that a data point is invalid. Outliers must be thoroughly investigated before they can be excluded. Outliers must be presumed to be correct unless there is documented evidence of an equipment malfunction or other exceptional condition that renders the result unrepresentative. Special flags are available in the Aerometric Information Retrieval System (AIRS) indicating when data are suspect.

Identification and investigation of outliers is particularly important with $PM_{2.5}$ monitoring because the 24-hour compliance criterion is based on the upper 98th percentile point of the concentration distribution. Because operational problems can sometimes cause anomalously high readings, potential outliers in the upper tail of the concentration distribution should be validated carefully.

A monitoring agency should provide a detailed description of its data screening procedures in its QAPP or in an approved data validation SOP. Decision rules for data invalidation and for taking corrective actions should be clearly described. Corresponding AIRS data flags should be specified in the agency's written procedure.

11.4.2 Validation of Software Used to Process $PM_{2.5}$ Data

Software used to process, manage, and report $PM_{2.5}$ data used for compliance purposes must be validated to ensure that it is free of incorrectly coded calculations and errors. The process of validating software is distinct from data validation discussed in the previous section.

A structured approach to software development, testing, and validation is strongly recommended for managing $PM_{2.5}$ compliance data. Information on structured software development, testing and validation can be found in EPA QA/R-5, *EPA Requirements for Quality Assurance Project Plans for Environmental Data Operations, Appendix G*, and in many other publications.

A few of the areas that should be tested during the development of $PM_{2.5}$ compliance and reporting software include the following:

- Correctness of calculations
- Correct assignment of input and output values (i.e., verify that the input and output values are correctly identified as to station, sample time period, sampler number, filter number, and so on)
- Correct calculation of statistics, including determination of the correct 98th percentile point for the 24-hour compliance criterion (40 CFR Part 50, Appendix N, Section 2.6).

- Correct operation across the turn of the century (year 2000 problem)
- Correct application of validation procedures, range checks, statistical control limits, and so on.

Use of spreadsheets for processing and managing large environmental data sets is strongly discouraged. Spreadsheets are difficult to test thoroughly and can develop new problems as more data are added and predefined data ranges overflow. Modern relational database products offer a much more reliable environment for large-scale data processing, although they are somewhat more difficult to learn at first.

Although software does not usually "break" or wear out after it has been written and tested, any change in its runtime environment may potentially cause problems. Therefore, periodic reverification of software is advisable, especially after significant changes to system hardware or software. Whenever individual software modules are changed, run test procedures to detect any unintended consequences of the changes. Software documentation that describes configuration changes and test results should be maintained.

All monitoring agencies are strongly encouraged to develop and comply with SOPs for software development, testing, maintenance, configuration control, documentation, and data archiving. The QAPP should identify the relevant data processing SOPs, and these should be addressed during periodic audits.

11.5 Data Reporting

The primary standards for particulate matter in ambient air are based on the measured mass concentration of $PM_{2.5}$. Information on reporting and interpretation of $PM_{2.5}$ data with respect to the attainment of these standards is covered in 40 CFR Part 50, Appendix N.

11.5.1 Rounding

Raw data from the samplers are preferably recorded electronically and/or communicated by electronic means to a central computer where they are recorded. Electronically stored data and computerized calculations should not be rounded until final formatting for reports or for delivery to AIRS.

Filter weight data for calculating $PM_{2.5}$ concentrations should be recorded to the full readable precision of the microbalance. Hand-calculated weight differences should be carried to the same number of digits and should not be rounded.

For other hand-recorded data, including calibration and audit data, it is advisable to read and record somewhat more resolution than will be needed for calculating the final result. For example, to make a measurement that will be reported to the nearest 1 percent, attempt to read the data to at least the nearest 0.5 percent or better. It is usually not necessary to record a resolution more than a factor of 10 better than that needed in the final result, however.

Special care should be taken when recording data that will be used in a difference calculation: enough significant figures must be recorded so that the **result** will have the necessary resolution. The most obvious example is the determination of $PM_{2.5}$ mass by the difference of two filter

weights. Measurement of the filter weight to six significant figures is necessary in order to get adequate precision in the net particulate mass. All data recording forms should specify the appropriate number of digits, or the necessary resolution in physical units, for each parameter that must be manually recorded.

11.5.2 Rounding Rules for Comparison with the National Ambient Air Quality Standards

For comparing calculated concentration averages to National Ambient Air Quality Standards (NAAQS) levels, it is necessary to use round-off rules defined in Sections 2.5 and 2.6 of 40 CFR Part 50, Appendix N. For the annual $PM_{2.5}$ standard (currently 15 μg/m^3), the 3-year average of the spatially averaged annual means is rounded to the nearest 0.1 mg/m^3. Decimals 0.05 and greater are rounded up to the next 0.1, and any decimal lower than 0.05 is rounded down to the nearest 0.1. For the 24-hour $PM_{2.5}$ standard (currently 65 μg/m^3), the 3-year average of the annual 98th percentile values is rounded to the nearest 1 mg/m^3. Decimals 0.5 and greater are rounded up to the nearest whole number, and any decimal lower than 0.5 is rounded down to the nearest whole number.

A different method is required for determining the annual 98th percentile concentration values used for the 24-hour NAAQS. According to the method described in Section 2.6 of 40 CFR Part 50, Appendix N, the observation number used to represent the 98th percentile value is always rounded up, never down. The daily concentration observations for N yearly observations are arranged in order of size, from smallest to largest (i.e., from 1 to N). The 98th percentile concentration value for a particular year is defined by the CFR as

$$P_{0.98,y} = X_{[i+1]}$$

where

$P_{0.98,y}$ Is the 98th percentile concentration value for year y
$X_{[i+1]}$ Is the (I+1)th concentration in the ordered series of concentration values for year y
I Is the integer part of the product of 0.98 times the total number of valid concentration values collected during year y (i.e., $0.98 \cdot N$).

Taking the (i+1)st value is equivalent to rounding the observation number up to the next highest integer, regardless of whether the fractional part of $0.98 \cdot N$ is greater than or less than 0.5.

12.0 Data and Records Management

12.1 Overview

It is important to keep good records in any air pollution measurement program. This is particularly true for measurements of $PM_{2.5}$ by reference or Class I equivalent methods because these are manual methods that involve the transfer and handling of samples and data by several people. Automated methods, on the other hand, present the final, averaged data with much less human intervention and, thus, limit the possibilities of transcription errors and misplacement of data.

Keeping good records and managing the data obtained under $PM_{2.5}$ regulations are especially important because this is a newly designated criteria pollutant, and the samplers and methodology for its determination are new to most users. Thus, records of knowledge gained in the initial stage of network operation will be of great help in improving and refining all operational aspects of $PM_{2.5}$ determinations.

Section 14 of the U.S. EPA's *Quality Assurance Handbook for Air Pollution Measurement Systems, Volume II, Ambient Air Specific Methods, Part I*, gives guidance on data acquisition and information management (EPA 1997). Although it emphasizes automated data acquisition, much of the discussion is also applicable to manual methods. There are several reasons for maintaining complete, orderly records and properly managing data. Records can

- Provide information on mechanical problems that occur and document how the problems were corrected
- Provide a history of warranty repairs
- Provide a history of in-house repairs and preventive maintenance servicing
- Document date and site placement details for the primary and collocated samplers as well as the characteristics of the surrounding land areas, sources, and other features
- Be a useful source of information at the time of the annual network review to show proper sampler installation and operation, performance of quality control (QC) and quality assurance (QA) checks, traceability of equipment and standards, and proof that all systems were kept in control (use of control charts)
- Provide evidence to support the quality of $PM_{2.5}$ data submitted to regional and national databases.

12.2 Methodology for Data and Records Management

A systematic approach to maintaining records and managing data for all reported ambient air pollutant concentrations usually involves the following considerations:

- **Personnel**—One or more persons should be identified within the reporting organization to be responsible for maintaining the records and preparing and submitting the required data products. Education, training, and experience are requirements for the position. Standard Operating Procedures (SOPs) will also be required.

- **Quality assurance**—An individual or group should be assigned to prepare SOPs, to conduct internal systems and performance audits, and to review the data before submission.
- **Facilities and equipment**—A designated storage location for paper records and computer data files should be established. Using file cabinets that can be locked is suggested. A backup copy of data files should be kept in another location for safety. Computers and data entry stations, as well as connections to centralized databases (such as the Aerometric Information Retrieval System [AIRS]), are also required.

12.3 $PM_{2.5}$ Records to Create and Retain

A quality assurance project plan (QAPP) and SOPs for various aspects of the $PM_{2.5}$ sampling program should be prepared. Much of the required information can be drawn from that given in the applicable sections of the *Code of Federal Regulations (CFR)*, the sampler's instruction manual, and this document. Records to maintain are summarized below.

12.3.1 Sampler Siting and Maintenance Records

Documentation regarding siting and maintenance of the $PM_{2.5}$ samplers should be retained in the files. These documents may include the following:

- Site selection criteria checklist; photographs or color slides of the site in the eight cardinal directions, with the $PM_{2.5}$ sampler in the center foreground; site sketch; U.S. Geological Survey (USGS) topographical map of the area; and a copy of the site documentation records that were submitted to the AIRS database when the site was first established and any updates made since that time.
- Procurement log for field equipment (see Figure 4-1). Notes on acceptance/rejection tests (see Table 4-1).
- Warranty and maintenance records for each $PM_{2.5}$ sampler. A dated maintenance checklist should be established for each sampler and separate maintenance logbooks should be used for the $PM_{2.5}$ samplers and the laboratory microbalance(s).
- Manufacturer-supplied calibration and traceability records for the thermometers, flow rate measuring devices, and pressure sensors used for calibrating, checking, or auditing $PM_{2.5}$ samplers. Maintain similar records for calibrations and traceability studies conducted in the reporting organization's laboratory or elsewhere.

12.3.2 Analytical Laboratory Installation Records

Records to keep about the physical setup of the analytical laboratory include the following:

- Equipment inventory (microbalances, conditioning chambers, antistatic devices, calibration and check weights, and so on).
- Procurement log (see Figure 4-1). Notes on acceptance/rejection tests (see Table 4-1)
- Records (e.g., control charts) that demonstrate that the temperature and relative humidity (RH) within the weighing laboratory and conditioning chambers were held within specified limits

- Microbalance logbook.

12.3.3 Field Sampling Operation Records

$PM_{2.5}$ sampling operations generate a number of paper and/or computerized records that need to be reviewed, reported, and filed. Starting with the calibration of the sampler's sensors, these records will include at least the following items:

- Sampler calibration logbooks or data sheets for entering results of temperature, pressure, and flow rate checks, audits, and calibrations. Also include documentation of the devices used to calibrate the sampler(s) and these devices' traceability records or references to the traceability records. A separate section of the logbook should be used for each sampler in the network. Enter results of the sampling procedure checks (see Table 8-1), which include notes on filter inspection, and checks of flow rate and leaks.
- $PM_{2.5}$ sampler run data sheet (see Figure 8-1 for an example). The run data sheet should be prepared at least in duplicate by using carbonless paper or making copies. The original of the data sheet should accompany the filter sample to the laboratory, and a copy should be retained in the field site records files.
- $PM_{2.5}$ sampler flow check data sheet (see Figure 8-2 for an example).
- Computer disks and printouts of data downloaded from the data port of each $PM_{2.5}$ sampler.

12.3.4 Weighing Laboratory Operation Records

Data records from activities in the weighing laboratory are expected to include at least the following items:

- Records of temperature and humidity control in the laboratory and in the filter conditioning environment (if the latter is different from the laboratory). Use of control charts is recommended.
- Laboratory data form (see Figure 7-2 for an example).
- Laboratory internal QC log (see Figure 7-1 for an example).
- Results of microbalance calibrations and servicing. This information can be recorded in the microbalance logbook.
- Results of filter integrity checks and determinations of the conditioning periods required for various filter batches (refer to Sections 7-5 and 7-6).
- The completed $PM_{2.5}$ sampler run data sheet (see Figure 8-1 for an example).
- Records of sample numbers (identifications) and locations of archived $PM_{2.5}$ samples.

12.3.5 Quality Assurance Records

Quality assurance systems and performance audits require complete documentation as well. Records of audits may be similar to the following items:

- Flow rate, temperature, and pressure audit data sheet (see Figure 10-1 for an example)
- Systems audit questionnaire (see Figure 10-2 for an example).

Accuracy and precision audit results are based on comparing the data from the primary sampler (the one used regularly at the site) to data from collocated samplers. These data are reported to the EPA Regional Office and to the AIRS database as noted in Sections 11.0 and 12.4.

12.4 Data Reporting Requirements

The EPA Regional Office and the AIRS database require the following information be reported on a quarterly (generally, calendar-quarter) basis (EPA will calculate measurement uncertainties for the entire calendar year):

- Siting documentation (upon installation and any changes thereafter)
- $PM_{2.5}$ concentration data, $\mu g/m^3$, or sample weight and volume sampled to allow electronic calculations (entered electronically into the AIRS database)
- Information calculated and provided by the sampler (refer to Table 12-1 [Adapted from 40 CFR Part 50, Appendix L, Table L-1]). This information is retrieved from the data port of each sampler. It is generally downloaded in the field to a laptop computer or another data storage device and later processed in the laboratory or office. Data outputs to be provided to the AIRS database are indicated in Table 12-1 by the bullet symbol.
- Results of all valid precision, bias, and accuracy tests performed during the quarter. Refer to Section 10.0 for details.

Features can be incorporated into the processing program to detect and correct typographical errors, such as out-of-sequence dates for start and end times, extremely high (or low) filter weights, flow rates, and temperatures.

Table 12-1. Summary of Information to be Provided by Sampler

Information to be provided	Appendix L section reference	Availability				Format	
		Anytime	End of period[b]	Visual display[c]	Data output[d]	Digital reading[e]	Units
Flow rate, 30-sec maximum interval	7.4.5.1	✔	—	✔	*	XX.X	L/min
Flow rate, average for the sample period	7.45.2	*	✔	*	✔	XX.X	L/min
Flow rate, coefficient of variation (CV), for the sample period	7.4.5.2	*	✔	*	✔●	XX.X	%
Flow rate, 5-min average out of specification[f]	7.4.5.2	✔	✔	✔	✔●	On/off	
Sample volume, total	7.4.5.2	*	✔	✔	✔●	XX.X	m^3
Temperature, ambient, 30-sec interval	7.4.8	✔	—	✔	—	XX.X	°C

Table 12-1 (continued)

Information to be provided	Appendix L section reference	Availability				Format	
		Anytime[a]	End of period[b]	Visual display[c]	Data output[d]	Digital reading[e]	Units
Temperature, ambient, min., max., average for the sample period	7.4.8	*	✔	✔	✔●	*XX.X*	°C
Barometric pressure, ambient, 30-sec interval	7.4.9	✔	—	✔	—	*XXX*	mmHg
Barometric pressure, ambient, min., max., average for the sample period	7.4.9	*	✔	✔	✔●	*XXX*	mmHg
Filter temperature, 30-sec interval	7.4.11	✔	—	✔	—	*XX.X*	°C
Filter temperature, differential, 30-min interval, out of specification[f]	7.4.11	*	✔	✔	✔●	On/Off	
Filter temperature, maximum differential from ambient, date, time of occurrence	7.4.11	*	*	*	*	*X.X, YY/MM/DD HH:mm*	°C, yr/mo/ day hr min
Date and time	7.4.12	✔	—	✔	—	*YY/MM/DD HH:mm*	yr/mo/ day hr min
Sample start and stop time settings	7.4.12	✔	✔	✔	✔	*YY/MM/DD HH:mm*	yr/mo/ day hr min
Sample period start time	7.4.12	—	✔	✔	✔●	*YYYY/MMM/DD HH:mm*	yr/mo/ day hr min
Elapsed sample time	7.4.13	*	✔	✔	✔●	*HH:mm*	hr min
Elapsed sample time out of specification[f]	7.4.13	—	✔	✔	✔●	On/Off	
Power interruptions >1 min, start time of first 10	7.4.15.5	*	✔	*	✔	1*HH:mm*, 2*HH:mm*, etc.	hr min
User-entered information, such as sampler and site identification	7.4.16	✔	✔	✔	✔●	As entered	

See notes on following page.

Table 12-1 (continued)

✔ Provision of this information is required.

✱ Provision of this information is optional. If information related to the entire sample period is optionally provided prior to the end of the sample period, the value provided should be the value calculated for the portion of the sampler period completed up to the time the information is provided.

● This information is also required to be provided to the AIRS database.

[a] This information is required to be available to the operator any time the sampler is operating, whether sampling or not.

[b] This information relates to the entire sampler period and must be provided following the end of the sample period until reset manually by the operator or automatically by the sampler upon the start of a new sample period.

[c] This information shall be available to the operator visually.

[d] This information should be available as digital data at the sampler's data output port following the end of the sample period until reset manually by the operator or automatically by the sampler upon the start of a new sample period.

[e] Digital readings, both visual and data output, shall have no less than the number of significant digits and resolution specified.

[f] Flag warnings may be displayed to the operator by a single-flag indicator or each flag may be displayed individually. Only a set (on) flag warning must be indicated; an off (unset) flag may be indicated by the absence of a flag warning. Sampler users should refer to Section 10.12 of Appendix L regarding the validity of samples for which the sampler provided an associated flag warning.

13.0 Assessment of Measurement Uncertainty for Monitoring Data

13.1 Overview

State and Local Air Monitoring Stations (SLAMS) reporting organizations are required to assess the measurement uncertainty of their $PM_{2.5}$ monitoring data (EPA 1997). Three different procedures are used in this assessment:

- Flow rate audit—The accuracy of the $PM_{2.5}$ sampler's flow rate is assessed by performing a flow rate audit as described in Section 10.2.4. Performance of this audit is the responsibility of the State and/or the reporting organization. The goal for accuracy of the sampler flow rate is to be within ±2 percent of the value indicated by the audit device (during multipoint verification/calibration) or ±4 percent (during one-point verification checks and audits) and to be within ±5 percent of the sampler's design flow rate (16.67 L/min).
- Bias—$PM_{2.5}$ measurement bias is assessed by conducting a Federal Reference Method (FRM) collocated sampler audit. The U.S. EPA Regional Offices will conduct this performance evaluation. The bias goal is to be between -10 percent and +10 percent (i.e., to have the site sampler's $PM_{2.5}$ concentration value agree within ±10 percent of the audit value).
- Precision—$PM_{2.5}$ measurement precision is assessed by collocating (i.e., locating a second, duplicate sampler alongside the primary sampler used for measurement) samplers and reporting the results of both the measurement sampler and the collocated sampler. Operation of the duplicate samplers is the responsibility of the State and/or the reporting organization. The precision goal is to have a coefficient of variation (CV) of less than 10 percent.

These procedures are very similar to those used in the data quality assessment (DQA) of PM_{10} monitoring data. The results of these procedures are used to screen individual samplers for bias or excessive imprecision. EPA also uses these results to assess measurement uncertainty for each reporting organization. The results from all SLAMS reporting organizations are used by EPA to assess the measurement uncertainty of data from each $PM_{2.5}$ reference or equivalent method on a national basis.

13.2 Flow Rate Audits

Flow rate audits consist of measuring the sampler's normal operating flow rate with a flow rate transfer standard. This procedure is described in Section 10.2.1. Manual $PM_{2.5}$ sampler methods must be audited each calendar quarter. Audits should be scheduled to avoid interference with regularly scheduled sampling periods. Whenever possible, these flow audits should be performed at randomly selected times with respect to time of day and day of week.

Results of the flow rate audit to be reported to EPA are as follows:

- The audit (true) flow rate as determined using the transfer standard.
- The corresponding flow rate as measured by the sampler. This rate should be that used by the sampler to calculate its reported total sampling volume and average flow rate. This information is typically obtained from the sampler's flow rate display or from its data

system.

The sampler's flow rate accuracy (A) should be within ± 4 percent of the audit value. Furthermore, the audit measured flow rate accuracy (A_D) should be within ±5 percent of the sampler's design inlet flow rate (16.67 L/min). The sampler's flow rate accuracies (A and A_D) are calculated as follows:

$$A(\%) = \frac{Q_{Sampler} - Q_{Audit}}{Q_{Audit}} \times 100 \quad (1)$$

$$A_D(\%) = 100 \times (Q_{sampler} - 16.67) / 16.67 \quad (2)$$

where

A = flow rate accuracy (percent)
A_D = flow rate accuracy (percent) versus design flow rate
$Q_{Sampler}$ = flow rate as measured by sampler (L/min)
Q_{Audit} = flow rate as measured by the flow rate transfer standard (L/min)
16.67 = design flow rate (L/min).

13.3 Bias Assessment

Sampler bias is assessed from the results of an FRM performance evaluation (PE) (Section 10.2.3) administered through the EPA Regional Offices. The goal for acceptable bias is between -10 percent and +10 percent (i.e., the reporting primary sampler's concentration should agree to within ±10 percent of the FRM PE sampler's concentration). Minimum FRM PE requirements for SLAMS reporting organizations include the following:

- At least one sampler must be audited annually.
- At least 25 percent of each reference method and of each EPA-designated equivalent method must be audited each year (i.e., in most cases, 25 percent of each make and model of sampler will need to be audited). This percentage includes collocated sites, even those collocated with FRM instruments. Thus, if a reporting organization has three different makes of samplers, each with a different equivalency designation, the reporting organization will have to audit 25 percent of each make of sampler. If a fractional number of samplers is required, values of 0.5 or greater must be rounded up to the nearest whole number. For example, a reporting organization with 10 samplers of a given type must audit at least 3 of those samplers.
- Audits must occur at least four times a year.
- All samplers must be audited at least once every 4 years.

In addition to these requirements, areas that exceed the National Ambient Air Quality Standard (NAAQS) for $PM_{2.5}$ should place special emphasis on those sites with the highest $PM_{2.5}$ concentrations as follows:

- Reporting organizations with sites reporting $PM_{2.5}$ concentrations equal to or exceeding 90 percent of the NAAQS (annual or 24 hour, as appropriate):

- 80 percent of FRM PEs should be performed at those sites reporting $PM_{2.5}$ concentrations equal to or exceeding 90 percent of the NAAQS (annual or 24 hour, as appropriate).
- The remaining 20 percent of FRM PEs should be performed at sites reporting concentrations less than 90 percent of the NAAQS (annual or 24 hour, as appropriate).

- Reporting organizations **without** sites reporting $PM_{2.5}$ concentrations exceeding 90 percent of the NAAQS (annual or 24 hour, as appropriate):
  - 60 percent of FRM PEs should be performed at sites that rank in the top 25 percent of the highest sites for $PM_{2.5}$ concentrations (annual or 24 hour, as appropriate).
  - The remaining 40 percent of FRM PEs should be performed at the remaining 75 percent of sites.

The individual sampler and audit measurements must be reported to EPA, which uses them to calculate the single sampler bias (B) and the quarterly average bias ($\overline{B}$) for a reporting organization. Reporting organizations may also want to calculate these parameters for their quality assurance (QA) use. The single sampler bias (B) may be calculated as follows:

$$B(\%) = \frac{PM_{2.5_{Sampler}} - PM_{2.5_{Audit}}}{PM_{Audit}} \times 100 \qquad (3)$$

where

B = bias (percent)
$PM_{2.5_{Sampler}}$ = $PM_{2.5}$ concentration as measured by sampler ($\mu g/m^3$)
$PM_{2.5_{Audit}}$ = $PM_{2.5}$ concentration as measured by audit device ($\mu g/m^3$).

The quarterly average bias for a single sampler ($\overline{B}$) may also be calculated as follows:

$$\overline{B} = \frac{1}{n} \times \sum_{i=1}^{n} B_i \qquad (4)$$

where

$\overline{B}$ = average quarterly bias (percent)
B_i = bias for the ith measurement (percent)
n = number of measurements during quarter.

13.4 Precision

13.4.1 Overview

$PM_{2.5}$ precision is assessed by collocating samplers (i.e., locating a second sampler alongside the primary sampler used to report a measurement). Both samplers are run identically and the results

from both samplers are reported to EPA. The collocated (duplicate) sampler's inlet must be placed horizontally between 1 and 4 m from the reporting sampler and within 1 m of the same height (elevation) as the reporting sampler (Section 5.1.2). If there is a high volume sampler at the site, both the primary and duplicate $PM_{2.5}$ samplers must be separated from it by at least 2 m. The collocated (duplicate) sampler must be operated and its sample processed in exactly the same way as the primary reporting sampler and should be operated at least every sixth day on the same start time/end time schedule. It is important always to designate one sampler as the primary or reporting sampler and the other always as the collocated or duplicate sampler, even when the reporting sampler may be identical in make and model to the collocated sampler. The precision goal is to have a CV of less than 10 percent. Refer to the CFR Part 40, Section 58, Appendix A, Section 5.5, for detailed calculation procedures. Under no circumstances should data from the collocated sampler be reported as coming from the reporting sampler. However, collocated sampler data should always be reported even when the primary sampler's data are nonexistent or invalid.

Concentration data must be reported for both the primary and collocated sampler, no matter how low the concentration. Because agreement between the measurements of collocated samplers may be relatively poor at low concentrations, collocated measurement pairs are used by EPA to calculate precision only when both $PM_{2.5}$ measurement concentrations are above 6 $\mu g/m^3$.

13.4.2 Number of Collocated Samplers Required

To assess precision of their sampling data, SLAMS reporting organizations must meet the following collocation requirements:

- At least one reporting sampler must have a collocated sampler.
- At least one of the collocated samplers must be an FRM sampler (i.e., not a designated equivalent method sampler).
- At least 25 percent of all reporting samplers must have collocated samplers. If fractional numbers of collocated samplers are required, values of 0.5 or greater must be rounded up to the nearest sampler. For example, a reporting organization with 10 reporting samplers must provide collocated samplers for at least 3 of those reporting samplers.

In addition to these requirements, additional specifications must also be observed with respect to the different makes and models of samplers used as collocated samplers:

- Collocated samplers for FRM-designated reporting samplers shall always be of the identical FRM designation (i.e., the collocated and reporting samplers are of the same make and model).
- If the reporting sampler is a Federal Equivalent Method (FEM), half of the collocated samplers for the designated equivalent reporting samplers should have the identical equivalency designation (the same make and model), while the other half should be FRM-designated samplers. In cases where odd numbers of collocated samplers are required, the number of collocated FRM samplers should always be rounded up to the nearest sampler, with the remaining number being samplers of the same equivalent designation (samplers of the same make or model). For example, if five collocated samplers are required, then three should be FRM models and the remaining two should be models of the same equivalency

designation.

As an example, consider the minimum collocation requirements for an organization that has 43 reporting samplers composed of 25 FRM samplers, 10 equivalent designation A samplers, 2 equivalent designation B samplers, and 6 equivalent designation C samplers. Each type of sampler should be considered separately as shown in Table 13-1 for sampler types A, B, and C.

13.4.3 Location of Collocated Samplers

Collocated samplers should be placed at sites that have the highest $PM_{2.5}$ concentrations, with special emphasis on sites likely to be in violation of the NAAQS. Data from other particulate measurement methods, such as PM_{10} samplers, can be helpful in selecting sites for collocation.

SLAMS reporting organizations that have areas in violation of the NAAQS should place their collocated samplers as follows:

- Reporting organizations with sites reporting $PM_{2.5}$ concentrations equal to or exceeding 90 percent of the NAAQS (annual or 24 hour, as appropriate):
  - 80 percent of the collocated samplers should be located at those sites that equal or exceed 90 percent of the NAAQS (annual or 24 hour, as appropriate).
  - The remaining 20 percent of collocated samplers should be located at sites that report less than 90 percent of the NAAQS (annual or 24 hour, as appropriate).
- Reporting organizations **without** sites reporting $PM_{2.5}$ concentrations exceeding 90 percent of the NAAQS (annual or 24-hour, as appropriate):
  - 60 percent of collocated samplers should be located at sites that rank in the top 25 percent of the highest sites for $PM_{2.5}$ concentrations (annual or 24 hour, as appropriate).
  - The remaining 40 percent of collocated samplers should be located in the remaining 75

Table 13-1. Example of Collocated Sampler Requirements

Sampler type	Number of samplers	× 25 percent	Rounded to nearest sampler	Required collocated samplers	Required collocated samplers by type: FRM	Required collocated samplers by type: Same equivalent type
FRM samplers	25	6.25	6	6	6	NA
Equivalency-designated samplers						
Type A	10	2.5	3	3	2	1
Type B	2	0.5	1	1	1	0
Type C	6	1.5	2	2	1	1
Total for reporting organization	43			12	10	2

NA = Not applicable.

percent of sites.

13.4.4 Schedule for Operation of Collocated Samplers

Collocated samples should be taken to reflect the normal operation of the reporting sampler. The collocated samples should be evenly distributed across the various seasons and days of the week. A simple system to accomplish this is to run the collocated sampler every sixth day. Thus, if the first week's collocated sample was run on Monday, the second week's collocated sample would be run on Sunday, the third week's on Saturday, and so on. Remember to start and stop both the collocated and reporting samplers at exactly the same time for each sample run.

14.0 References

Section 1.0

ANSI/ASQC. 1994. American national standard—Specifications and guidelines for quality systems for environmental data collection and environmental technology programs. American National Standard Institute/American Society for Quality Control. ANSI/ASQC E4-1994. Available from American Society for Quality Control, 611 East Wisconsin Avenue, Milwaukee, WI 53202.

Engelbrecht DR, Cahill T, Feeney PJ. 1980. Electrostatic effects on gravimetric analysis of membrane filters. J Air Poll Control Assoc 30:391-392.

EPA. 1995. Guidance for the preparation of standard operating procedures (SOPs). U.S. Environmental Protection Agency. Publication QA/G-6, U.S. EPA Quality Assurance Division, Washington, DC. November.

EPA. 1997a. Reference method for the determination of fine particulate matter as $PM_{2.5}$ in the atmosphere. U.S. Environmental Protection Agency. 40 CFR Part 50, Appendix L.

EPA. 1997b. Ambient air quality surveillance. U.S. Environmental Protection Agency. 40 CFR Part 58, as amended July 18, 1997.

EPA. 1997c. Ambient air quality monitoring methodology. U.S. Environmental Protection Agency. 40 CFR Part 58, Appendix C, as amended July 18, 1997.

EPA. 1997d. Ambient air monitoring reference and equivalent methods. U.S. Environmental Protection Agency. 40 CFR Part 53, as amended July 18, 1997.

Lipfert FW. 1994. Filter artifacts associated with particulate measurements: recent evidence and effects on statistical relationships. Atmos Environ 28:391-392.

Papp ML, Elkins JB, Musick DR, Messner MJ. 1998. Data Quality Objectives for the $PM_{2.5}$ Monitoring Data. U.S. Environmental Protection Agency, Research Triangle Park, NC. In preparation.

Section 2.0

EPA. 1998. Quality assurance handbook for air pollution measurement systems. Volume II: Ambient air specific methods, Part I. U.S. Environmental Protection Agency. EPA-454/R-98-004, August 1998.

Section 3.0

EPA. 1997a. Reference method for the determination of fine particulate matter as $PM_{2.5}$ in the atmosphere. U.S. Environmental Protection Agency. 40 CFR Part 50, Appendix L.

EPA. 1997b. Procedure for testing physical (design) and performance characteristics of reference methods and Class I equivalent methods for $PM_{2.5}$. U.S. Environmental Protection Agency. 40 CFR Part 53, subpart E, Appendix A, as revised July 18, 1997.

Section 4.0

ASTM. 1992. Standard test method for inspection and verification of thermometers. American Society for Testing and Materials. Philadelphia, PA. ASTM Standard E77-92.

ASTM. 1995a. Standard specification for ASTM thermometers. American Society for Testing and Materials. Philadelphia, PA. ASTM Standard E1-95.

ASTM. 1995b. Standard test methods for measuring surface atmospheric pressure. American Society for Testing and Materials. Publication number ASTM D3631-95.

ASTM. 1995c. Standard practice for evaluation of air assay media by the monodisperse DOP (Dioctylphthalate) smoke test. American Society for Testing and Materials. Philadelphia, PA. ASTM Standard D2986-95a.

EPA. 1995. Quality assurance handbook for air pollution measurement systems. Volume IV: meteorological measurements. Section 4.3.5. U.S. Environmental Protection Agency.

EPA. 1997a. Reference method for the determination of fine particulate matter as $PM_{2.5}$ in the atmosphere. U.S. Environmental Protection Agency. 40 CFR Part 50, Appendix L.

EPA. 1997b. Ambient air monitoring reference and equivalent methods. U.S. Environmental Protection Agency. 40 CFR Part 53, as amended July 18, 1997.

Harris GL. 1994. State weights and measures laboratories: state standards program description. National Institute of Standards and Technology. Special publication 791. 130 pp.

Nelson, G.O. 1992. *Gas Mixtures: Preparation and Control.* Lewis Publishers, Boca Raton, FL, 304 pp.

NIST. 1986. Thermometer calibration: A model for State calibration laboratories. National Institute of Standards and Technology. NBS monograph 174. January.

NIST. 1988. Liquid-in-glass thermometer calibration service. National Institute of Standards and Technology. Special publication 250-23. September.

NIST. 1989. The calibration of thermocouples and thermocouple materials. National Institute of Standards and Technology. Special publication 250-35. April.

White VR. 1997. National Voluntary Laboratory Accreditation Program: 1997 Directory. National Institute of Standards and Technology. Special publication 810. 225 pp.

Section 5.0

EPA. 1997a. Network design for State and local air monitoring stations (SLAMS), national air monitoring stations (NAMS), and photochemical assessment monitoring stations (PAMS). U.S. Environmental Proteciton Agency. 40 CFR Part 58, Appendix D, as amended July 18, 1997.

EPA 1997b. Guidance for network design and optimum site exposure for $PM_{2.5}$ and PM_{10}. U.S. Environmental Protection Agency, Office of Air Quality Planning and Standards. Finalized version, December 1997.

EPA. 1997c. Reference method for the determination of fine particulate matter as $PM_{2.5}$ in the atmosphere. U.S. Environmental Protection Agency. 40 CFR Part 50, Appendix L.

Section 6.0

ASTM. 1977. Standard test methods for measuring surface atmospheric pressure. American Society for Testing and Materials. Philadelphia, PA. Standard D 3631-84.

EPA. 1995. Quality Assurance Handbook for Air Pollution Measurement Systems Volume IV: Meteorological Measurements. U.S. Environmental Protection Agency. Document No. EPA/600/R-94/038d. Revised March.

EPA. 1997. Reference method for the determination of fine particulate matter as $PM_{2.5}$ in the atmosphere. U.S. Environmental Protection Agency. 40 CFR Part 58, Appendix L, as amended July 18, 1997.

EPA 1998. Quality Assurance Handbook for Air Pollution Measurement Systems. Volume II, Part I. Ambient Air Specific Methods. Appendix 12, "Calibration of Primary and Secondary Standards for Flow Measurements."

NIST. 1976. Liquid-in-glass thermometry. National Institute of Standards and Technology. NBS Monograph 150. January.

NIST. 1986. Thermometer calibration: a model for state calibration laboratories. National Institute of Standards and Technology. NBS Monograph 174. January.

NIST. 1988. NIST measurement services: liquid-in-glass thermometer calibration service. National Institute of Standards and Technology. Special publication 250-23. September.

NIST. 1989. The calibration of thermocouples and thermocouple materials. National Institute of Standards and Technology. Special publication 250-35. April.

Section 7.0

ASTM. 1993a. Standard practice for maintaining constant relative humidity by means of aqueous solutions. American Society for Testing and Materials. 1993 Annual Book of ASTM Standards, Vol 11.03, Designation E 104-85 (reapproved 1991), pp. 570–572.

ASTM. 1993b. Standard specification for laboratory weights and precision mass standards. American Society for Testing and Materials. 1993 Annual Book of ASTM Standards, Vol 14.02, Designation E 617-91, pp. 280–295.

Desert Research Institute. 1994. DRI Standard Operating Procedure. Gravimetric Analysis, DRI SOP No. 2-102.3, Reno, NV. 24 pp.

Eisner AD. 1997. Personal communication. ManTech Environmental Technology, Inc., Research Triangle Park, NC.

Engelbrecht DR, Cahill TA, Feeney PJ. 1980. Electrostatic effects on gravimetric analysis of membrane filters. Journal of the Air Pollution Control Association 30(4):319–392.

EPA. 1997. Reference method for the determination of fine particulate matter as $PM_{2.5}$ in the atmosphere. U.S. Environmental Protection Agency. 40 CFR Part 50, Appendix L.

Harris G. 1993. Ensuring accuracy and traceability of weighing instruments. ASTM Standardization News 21(4):44–51.

Harris GL. 1994. State weights and measures laboratories: State standards program description.

National Institute of Standards and Technology. Special publication 791. 130 pp.

Hawley RE, Williams CJ. 1974. Electrostatic effects in microbalances. I. General considerations of the effectiveness of a radioactive ionizing source under ambient conditions. Journal of Vacuum Science and Technology 11(1):419–422.

Kupper WE. 1990. High accuracy mass measurements, from micrograms to tons. Instrument Society of America Transactions 29(4):11–20.

Weil J. 1991. Static control for balances. Cahn Technical Note. Published by Cahn Instruments, Inc., Madison, WI.

White VR. 1997. National Voluntary Laboratory Accreditation Program: 1997 Directory. National Institute of Standards and Technology. Special publication 810. 225 pp.

Section 10.0

EPA. 1994. EPA requirements for quality assurance project plans for environmental data operations. U.S. Environmental Protection Agency. Document EPA QA/R-5. External Review draft final, October 1998.

EPA. 1997. Ambient air quality surveillance. U.S. Environmental Protection Agency. 40 CFR Part 58, Appendix A—Quality assurance requirements for State and local air monitoring stations (SLAMS); Appendix E—Probe and monitoring path siting criteria for ambient air quality monitoring, as revised July 18, 1997.

Section 12.0

EPA. 1998. Data acquisition and information management. Section 14 of Quality Assurance Handbook for Air Pollution Measurement Systems, Volume II, Part I, Ambient Air Specific Methods. U.S. Environmental Protection Agency. EPA-454/R-98-004, August 1998.

Section 13.0

EPA. 1997. Quality assurance requirements for State and local air monitoring stations (SLAMS). U.S. Environmental Protection Agency. 40 CFR Part 58, Appendix A, as amended July 18, 1997.

15.0 Index

A

Accuracy
- assessing, Sections 10.0, 13.2
- definition, Table 2-1

Actual conditions, Table 2-1, Sections 6.1, 6.2

AIRS database, Sections 1.2, 12.4

Alkalinity
- filter, Appendix A

Audits, Section 10.0
- accuracy and precision, Section 10.2
- checklist, Figure 10.2
- microbalance, Section 10.2.4
- performance, sampler, Section 10.2
- sampler flow rate, Section 10.2.1
- summary, Table 10-1
- systems, Section 10.3

B

Balance
- operating environment, Section 7.2
- specifications, Section 4.3.6
- standards, Sections 4.3.7, 7.3

Barometer, Sections 4.2.2, 6.5.2

Bias
- definition, Table 2-1
- assessment, Sections 10.2.3, 13.3

Blank (filter)
- field, Sections 7.7, 8.2.4, Table 8-1
- laboratory, Section 7.7
- lot, Section 7.7

C

Calculations
- data, Section 11.0

Calibration, sampler, Section 6.0
- equipment, Section 4.2.2
- flow rate, Section 6.3
- frequency, Section 6.7
- leak checks, Section 6.6
- overview, Section 6.1
- pressure, Section 6.5
- temperature, Section 6.4

Cassette
- container for, Sections 4.3.3, 4.3.4
- definition, Table 2-1
- disassembly, Section 7.10
- illustration, Figure 7.3
- specifications, Section 4.3.2
- use, Sections 7.9, 8.2.1, 8.2.2

Cautions, Section 2.4

Checklists, check sheets
- auditing, Figure 10.1
- field QC/QA checks, Table 3-1
- filter preparation, analysis, Table 7-1
- laboratory QC/QA checks, Table 3-2
- leak-check, Figure 6.1
- procurement, Table 4-1
- sampling procedures, Figure 3.3
- summary of sampler information, Table 12-1

Collocated sampler requirements, Section 13.4

Conditioning chamber, Section 7.6

Containers
- cassette protection, Section 4.3.3
- shipping from field, Section 4.3.4
- filter handling, Section 4.3.5

D

Data and records
- management, Section 12.0

Data sheets and forms
- audit data (flow rate T, P), Figure 10.1
- flow check, Figure 8.2
- laboratory data form, Figure 7.2
- laboratory internal QC log, Figure 7.1
- leak check, Figure 6.1
- procurement log, Figure 4.1
- sampler run data sheet, Figure 8.1

Definitions
- key terms, Table 2-1

E

Electrostatic charge
- neutralization, Section 7.8

Equilibration chamber, Section 7.6

Equivalent methods, Section 1.5.2

F
Field filter blank, Sections 7.7, 8.2.1
Field operations, Section 8.0
    begin run, Section 8.2.1
    end run, Section 8.2.2
    data sheet, Figure 8.1
Filters
    acceptance criteria, Section 4.3.1
    alkalinity, Appendix A
    blanks, Sections 7.7, 8.2.1
    conditioning, Section 7.6
    containers for, Section 4.3.5
    defects, Section 7.5
    electrostatic charge, Section 7.8
    handling, Sections 7.4, 8.2.4
    preparation and analysis, Section 7.0
    weighing, Sections 7.9, 7.11
Flow adapter
    illustration and use, Figures 6.2, 8.3
Flow rates
    audit, Section 10.2.1
    calibration, Section 6.3
    calibration check, Section 8.3.2.3
    device for measuring, Section 4.2.3
    frequency of calibration, Section 6.7
    sampler, Section 8.3.2
    valid, Section 8.2.3
Flowmeters, Section 6.3.2
FRM performance evaluation sampler, Section 10.2.3

H
Humidity control, Section 7.6

I
Impactor well
    cleaning, Section 9.2.2
    description, Section 9.3.2, Figure 9.1
Installation
    sampler, Section 5.0

K
Key terms
    definitions, Table 2-1

L
Laboratory blank filter, Section 7.7
Leak checks, Sections 6.6, 8.3.2.2
    external, Section 6.6.1
    internal, Section 6.6.2
    programmed, *see sampler manual*
Limitations
    $PM_{2.5}$ method, Section 1.6

M
Maintenance, sampler, Section 9.0
    five-day, Section 9.2
    monthly, Section 9.3
    quarterly, Section 9.4
    other, Sections 9.5, 9.6
Mass reference standards, Sections 4.3.7, 7.3
Microbalance
    operating environment, Section 7.2
    specifications, Section 4.3.6
    standards, Section 4.3.7

O
Orifice, flow check, Figures 4.2, 8.3

P
Performance evaluations, Section 10.0
Personnel
    qualifications, Section 2.2
Precision
    assessment, Section 13.4
    collocation runs, Section 10.2.2
    definition, Table 2-1
Pressure, atmospheric, Section 6.2
Procurement
    equipment, supplies, Section 4.0

Q
Quality control
    filter weighing, Section 7.14
    sampler checks, Section 8.3

R
Reference methods, Section 1.5.1
Reference standards
    flow rate, Section 6.3.2
    mass, Section 4.3.7
    pressure, Section 6.5
    temperature, Section 6.4.2

S
Safety, Section 2.3
Sampler
field evaluation, Section 5.2.4
illustration, Figure 3.1
information provided by, Table 12-1
inlet, Section 3.2
inspection upon receipt, Section 5.2.1
laboratory evaluation, Section 5.2.2
leak check
external, Section 6.6.1
internal, Section 6.6.2
programmed, *see sampler manual*
operation, Section 8.0
Sampling
checklist, Figure 3.3
concentration calculations, Section 11.2.3
procedures, Section 8.0
validation, Section 8.2.3
volume calculations, Section 11.2.1
SLAMS, Sections 1.2, 3.1
Siting requirements, Section 5.1
Standards
flow rate, Section 6.3.2
mass, Section 4.3.7, 7.3
temperature, Section 6.4.2
volume, Section 6.3.2
Static charge, Section 7.8

T
Temperature
filter, Sections 6.4.4, 8.2.3
laboratory, Section 7.6
Thermometer, Section 4.2.2
Traceability
flow rate standards, Section 6.3.3
mass, Section 7.3
pressure standards, Section 6.5
temperature, Section 6.4.3
Troubleshooting, *see sampler manual*

V
Validation, sample, Section 8.2.3

W
Weighing, filters, Section 7.0
conditioning, Sections 7.6, 7.9, 7.11
elapsed time limits, Section 7.11
net mass, Section 11.2.2
presampling, Section 7.9
postsampling, Section 7.11
quality control, Section 7.14
Well, impactor, Sections 9.2.2, 9.3.2

Appendix A—Measuring Alkalinity of Filters

Note to the reader. The procedure given here is one created for and extensively tested for use with glass fiber or quartz high-volume filters. It is presented as guidance to the analyst for devising and testing a similar procedure for determining the acid-base character of $PM_{2.5}$ sampling filters.

A.1 History

Alkalinity of hi-vol filters is measured because alkaline sites react with SO_2, NO_x and other acid gases in the air forming sulfates, nitrates, etc. Such compounds' masses are indistinguishable from particulate mass collected by the filter. In turn, the total particulate weight, sulfate, content, nitrate content, etc., would be falsely high in proportion to filter alkalinity.

A.2. Scope and Applicability

This method describes procedures for measuring the alkalinities of glass and quartz fiber filters. New filters are tested for compliance with EPA alkalinity specifications and older filters are tested in order to evaluate appropriate correction factors for previously obtained particulate data. Table A-1 outlines the procedure.

A.3 Equipment and Reagents

Table A-2 lists the equipment and reagents. The supplier is always Fisher Scientific Company, unless otherwise specified. (This information is for reference purposes only.)

TABLE A-1. GENERAL DESCRIPTION OF EPA FILTER ALKALINITY PROCEDURES

Parameter	EPA specification
Sample container	250-mL Phillips beaker
H_2O extraction volume, mL	100
Heating technique	Hotplate, reflux condenser (sample temperature about 100 °C)
Extraction time, min	20
Mixer	Magnetic stirrer with 2-in stirring bar
Filtration equipment	7-cm ID unheated Buchner funnel 250-mL filter flask
Filtration procedure	Twice through Whatman 41 or 541
Titration vessel	250-mL filter flask (no transfer needed)
Titration technique	Potentiometric without temperature control or exclusion of atm CO_2
Endpoint	pH = 7.00 ± 0.01 after 5 min equilibration (electrode stationary)

TABLE A-2. EQUIPMENT AND REAGENTS

Minimum Qty	Description	Supplier, Cat. No.
Equipment		
1 roll	Heavy duty aluminum foil or stainless steel surface	01-213-11
1 pair	Scissors or shears	14-275C
1 pair	Forceps, 300 mm in length	10-316C
1	Ruler, 12 in. (300 mm) hardwood or metal	12-090
2 pairs	Lint-free gloves	11-393-5
1	Analytical balance (accurate to 1 mg)	
100	Aluminum weighing dishes	08-732
1 pair	Heat-resistant gloves	Lab Safety Supply H1955-2
1	pH Meter (accurate to 0.01 pH units)	
2	Combination pH electrode with AgCl reference and ceramic junction	
2	Electrode storage containers	13-640-300
1	Rectangular porcelain stand	14-667
1	Double buret clamp for above	05-779
2	Buret, 10 mL graduated in 0.05 mL, Class A	03-700-22A
1	Buret, 25 mL or 50 mL graduates in 0.1 mL, Class A, 3-way stopcock optional	03-724-10A
3	Beakers, 10 mL or buret covers	02-539C
2 (optional)	Aspirator bottle with tubulation, 1,000 mL (storage reservoir for H_2SO_4 titrant)	02-972D
3	Volumetric flasks, 1,000 mL, Class A	10-210G
1	Volumetric flask, 500 mL Class A	10-210F
1	Pipet, 1.00 mL, Class A	13-650-2B
1	Pipet, 4.00 mL, Class A	13-650-2E
1	Pipet, 10.00 mL, Class A	13-650-2L
1	Pipet, 100.00 mL, Class A	13-650-2U
1	Extension-type ring, 2–3 in. or clamp	14-055B
2	3-prong clamp, 57 mm grip size	05-740
3	3-prong clamp, 89 mm grip size	05-742
6	Clamp holders	05-757 or 05-759
1 or 2	Ring stands	
1 or 2	Lead bricks for above (or similar weighted object)	
1	Hotplate/stirrer, Corning PC-351 or equivalent	11-495-50
2	Hotplates, Corning PC-35 or equivalent	11-495
1	Watch glass, 90-mm diameter	02-612C
1	Erlenmeyer flask, 2,000 mL	10-040M

(continued)

TABLE A-2 (continued)

Minimum Qty	Description	Supplier, Cat. No.
1	Neoprene or rubber stoppers #6 ½, with hole to fit Buchner funnel	14-141H
2 (optional)	#8, for aspirator bottle	14-141K
1	#7, with hole to fit condenser	14-130L
1	#7, with hole to fit tube below	14-130L
1	1/4 in. to 3/8 in. O.D. heavy-walled glass or metal tube approximately 5 to 6 in long	
As needed	Vacuum tubing	
	Rubber	14-173C
	Tygon	14-169-2B
1 (2nd optional)	Tubing connector	
	Y-type	15-320-10C
	T-type	15-319C
1	Vacuum source (house vacuum, water aspirator, etc.)	
1	Buchner funnel for 7 cm filter paper	10-356C
1	Box of filter paper, Whatman 41 (or 541), 7 cm	09-850A
1	Forceps, 150 mm L	10-275
1	Stopwatch or equivalent timer, accurate to 1 sec or better	14-648 or 14-649-5
1	Spatula	
2	Wash bottles, polyethylene	03-409-10E or 03-409-22C
2	Tall form beakers, 200 mL or 150 mL beakers	02-545B
1	Graduated cylinder, 100 mL	08-549-5E
9	250 mL Phillips beakers or 250 mL wide mouth flasks	02-566B
10	Filter flasks, 250 mL	10-181D
Various	Assorted stir bars Teflon® coated or glass beads	10-181D
1	Magnetic stir bar ≥2 in length, Teflon coated	14-511-65
1	Beaker, 400 mL	02-540L
1	Water-cooled condenser, must be fitted to Phillips beakers or wide mouth flasks above	07-723B
1	Filter flask 500 mL	10-180E
As needed	Laboratory tissues and towels, sizes as available	
1	Box glassine envelopes, #7 4 1/8 in. × 6 1/4 in., ungummed flap	Worcester Envelope Co., #3525
1	Face shield	11-409-5
1	Box hose clamps	American Scientific Products, C6096-232

(continued)

Minimum Qty	Description	Supplier, Cat. No.
Reagents		
1	Case pH standard buffer solution, pH 7.00	SB107-500
1	Case pH standard buffer solution, pH 10.00	SB115-500
1	0.0500 N, Sodium Hydroxide NaOH, Fisher CERTIFIED, C.A.S. Reg. 1310-73-2, 1-L bottle	SS278-1
1	1.000 N, Sulfuric Acid, H_2SO_4, Fisher CERTIFIED, C.A.S. Reg. 7664-93-9, 1-L bottle	SA212-1
1	Potassium Chloride, CKl, Fisher CERTIFIED, Crystals, C.A.S. Reg. No. 7447-40-7, 500-g bottle	P-217-500
1	Hydrochloric Acid, HCl, ACS reagent, C.A.S. Reg. No. 7647-01-0 ½ gal bottle	A-144-212
	Deionized water	Laboratory Deionization System

A.4 Procedure

A.4.1 Sample Preparation

Filters should be handled only with clean lint-free gloves or clean metal utensils such as forceps, tongs, scissors, etc.

(1) After initial receipt, place the Hi-vol filters in a metal rack with separate slots for each filter. Place this rack in a controlled humidity (<50 percent relative humidity) , controlled temperature (25 °C), balance room and allow the filters to equilibrate for 24-48 hours. At the end of that period, carefully weigh each filter using a balance adapted for this purpose. Weigh to the nearest milligram or better. Then place the filters in a storage container.

(2) Remove one filter at a time from the storage container.

(3) Place the filter on a clean metal surface (aluminum foil spread on a regular lab bench, clean stainless steel surface, etc.). Measure its length and width on all edges. Calculate the area by multiplying the average length by the average width. Cut out the filter number printed in the upper right corner, in a single rectangular piece. Save the number and place it in a glassine envelope.

(4) Using a ruler, scissors, and lint-free gloves, cut the filter into ½ in. squares. This makes approximately 320 squares.

(5) Mix the squares and randomly select a sample of 70-80 squares (approximately 1 g). Do not select and analyze the piece of filter containing the filter number. Weigh the filter sample in a tared disposable aluminum weighing dish. The final sample weight must be within one square of 1 g. Record the weight to the nearest milligram.

(6) Store the remaining squares in a glassine envelope with the filter number showing. NOTE: Filters may be cut a few days before analysis and stored in glassine envelopes.

(7) Transfer the weighed sample into a 250-mL Phillips beaker or a 250-mL wide-mouth flask. Cover the beaker or flask with the aluminum weighing dish and seal.

(8) Clean the gloves, utensils and work area of any filter fibers or lint before taking out the next filter.

(9) Repeat Steps 2-8 until seven Phillips beakers containing filter squares have been prepared. Leave two Phillips beakers empty as blanks. Label the Phillips beakers and 250-mL filter flasks consecutively from 1 to 9 and pair by number for each sample or blank.

A.4.2 Solution Preparation

(1) Prepare 0.005 N NaOH titrant by diluting a certified 0.0500 N solution 1:10 with degassed deionized water (i.e., pipet 100.0 mL of certified NaOH into a 1,000-mL volumetric flask, dilute to the mark, and mix well). Degas the deionized water by bubbling N_2 through 1 L of water at a rate of approximately 1 L/min for 1 hour. Take care to protect the solution from the air during storage in order to prevent carbonate formation.

(2) Prepare 0.0100 N H_2SO_4 titrant by diluting certified 1.000 N H_xSO_4 titrant by diluting certified 1.000 N H_2SO_4 solution 1:100 with deionized water (i.e., pipet 10.00 mL into a 1,000-mL volumetric flask, dilute to the mark with deionized water, and mix well).

(3) Prepare 0.1 M KCl/0.0001 M HCl electrode storage solution by the following process. First, pipet 1 mL of reagent grade concentrated HCl into a 500-mL volumetric flask, dilute to the mark with deionized water, and mix well. Second, place 7.456 g of KCl in a 1,000-mL volumetric flask, add approximately 500 mL deionized water, swirl to dissolve the KCl crystals, pipet 4 mL of the diluted HCl solution into the flask, dilute to the mark with deionized water, and mix well. The solution may be stored in the volumetric flask or similar glass container.

A.4.3 General Notes and Pre-run Setup

(1) Set up the titration stand and burets well in advance of sample analysis. Place one buret clamp on the titration stand and adjust the clamp height. In the right-hand buret holder, place a 10-mL buret. Check to see that the stopcock is closed. Fill the buret with 0.005 N NaOH solution and place a small beaker or buret cover on top of the buret:

> **CAUTION**
>
> The NaOH solution should not be stored in the buret for any length of time due to its tendency to form carbonates when exposed to the air.

Place the other buret in the other side of the holder, fill the buret with 0.01 N H_2SO_4, and cover the top of the buret with a small beaker or buret cover.

(2) (Optional: If using buret with 3-way stopcock.) Attach one end of a length of acid-resistant, flexible tubing to the curved tube, A, at the bottom of the buret and connect the other end to a 3-way tubing connector. Securely fasten both ends using hose clamps. Attach the other two branches of the tubing connector with flexible tubing to the tubes at the base of the aspirator (reservoir) bottles. If a single reservoir bottle is used, curved tube A may be attached directly by a single line. Again, secure the connections with hose clamps. Check the

buret stopcock and make sure it is closed. Fill the reservoir bottle(s) with 0.0100 N H_2SO_4 and fill the buret by adjustment of the 3-way stopcock to the proper position. During analysis, cap the reservoirs with beakers. For overnight and longer storage, stopper the bottles with the appropriate sized stoppers. A regular 25- or 50-mL buret may also be used with a Nalgene self zero buret kit #364-2550.

(3) The filtration system should also be set up in advance. Clamp a 500-mL filter flask (serves as a trap) to a ring stand stabilized by a lead brick. Attach a piece of vacuum tubing to the vacuum source and to a 3-way connector. To one branch of the connector attach a short piece of vacuum tubing leaving the end open. Another piece of vacuum tubing must connect the remaining branch of the connector with the side arm of the 500-mL filter flask. Insert a 5-6 in. heavy-walled tube through the one-hole #7 stopper. Seat the stopper with tube in the flask and attach a piece of vacuum tubing to the tube. Connect an extension ring support to the stand (used for holding the Buchner funnel when not in use). Insert the Buchner funnel through a #6.5 neoprene stopper, set it in the ring stand, and cover the funnel with a 90-mm or larger watch glass.

(4) Insert the lower end of a condenser into a filter adapter or stopper that fits the Phillips beakers snugly. Connect the water supply to the bottom side arm of the condenser using a length of tubing. Also attach a drainage line (which runs to a sink) to the upper side arm of the condenser.

CAUTION

Securely fasten all connections using hose clamps, condenser hose clips or wire, to prevent the hoses from coming loose, causing flooding (especially dangerous around electrical equipment).

Clamp the condenser to a ring stand, turn the water on, and adjust the flow rate.

(5) At the beginning of each day's analysis, fill the 2,000-mL Erlenmeyer flask with deionized water, add a stir bar, place a watch glass over the mouth of the flask, and set the flask on a hotplate.

WARNING

A stir bar or glass bead must be placed in the flask to prevent violent bumping.

Set the heat on high until the water begins to boil. After boiling starts, turn the heat down sufficiently to just maintain boiling. Also, at this time set a hot plate/stirrer by the ring stand with the condenser and adjust the heat setting to high. Set the third hotplate (to be used during the cleanup step) in a convenient place and set on high heat. Generally, a 45- to 60-min warmup period is required for the water and hotplates.

A.4.4 pH Meter Calibration and Electrode Storage

(1) Calibrate the pH meter at the beginning and end of a run as described in the instrument manual and record the calibration data.

(2) Store electrodes in the 0.1 M KCl/0.0001 M HCl solution described in Section 4.2, Step 3. For short-term storage and between-samples the electrode may be placed in a beaker containing approximately 100 mL of storage solution. For long-term storage (weekend or longer) slip the electrode into an O-ring sealed electrode storage bottle approximately three-fourths full of storage solution and tighten the cap to seal the electrode body to the bottle.

A.4.5 Analysis of Glass Fiber Filters

WARNING

Protective equipment must be worn to prevent serious burns. The sample is hot and caustic and will adhere to the skin.

(1) Clamp a clean, 250-mL filter flask to the filtration stand and connect the tubing from the vacuum trap to the flask side arm. Set the Buchner funnel on top of the filter flask, place a single 7-cm Whatman 41 or 541 filter circle in the funnel using tweezers, and cover the funnel.

(2) Set the first Phillips beaker, containing filter squares, near the hotplate/stirrer and add a 2-in. magnetic stir bar.

(3) Pour 100 mL of boiling water from the 2-L flask into a graduated cylinder. (Use heat-resistant gloves to handle the hot glassware.)

(4) Set aside the aluminum weighing dish cover, place the Phillips beaker on the hotplate, and turn on the stirrer.

(5) Add the 100 mL of water to the Phillips beaker, begin timing the extraction, quickly lower the condenser into the beaker and clamp loosely.

(6) At approximately 19 minutes and 30 seconds after the start of the extraction, don the face mask, turn on the vacuum, and put on heat-resistant gloves.

(7) At about 19 minutes and 55 seconds quickly lift the condenser out of the Phillips beaker and clamp in a raised position.

NOTE

The stirrer may be stopped at this time.

(8) At exactly 20 minutes, using heat-resistant gloves, remove the Phillips beaker from the hotplate, swirl, and pour the contents rapidly, but carefully, through the Buchner funnel. Set the beaker on the bench and apply vacuum until the filter pad is just dry on top. The unconnected length of vacuum tubing may be used to regulate the vacuum strength by placing a finger over the hole in the tubing or by leaving it open.

(9) Remove the vacuum tubing and the funnel from the filter flask. Pour the hot extract back into the Phillips beaker carefully washing down any residual pulp. Reclamp the filter flask, replace the funnel, and reattach the vacuum tubing. Swirl and pour the extract through the filter. Apply vacuum as needed.

> **NOTE**
>
> Steps 8 and 9 should be completed in 2 minutes or less. Typical times have been 1 minute and 30 seconds to 1 minute and 50 seconds.

(10) Remove the fact shield, detach the vacuum tubing, set aside the Buchner funnel, place the filter flask on the titration stand, and remove gloves.

> **NOTE**
>
> Before titrating the extract just finished, a more efficient use of time may be made by starting the next sample at this point as follows: Remove the stir bar and wipe it clean of filter material adhering to it. Immediately start another extraction by performing Steps 2 through 5 on the next sample.

(11) Rinse the pH electrode with deionized water, shake off excess, pat dry with a laboratory tissue, and place in the filter flask. Push pH button (meter in Manual Temperature Compensation mode, set to 25°) and take an initial pH reading; this reading should be between pH 9 and 11 for glass filters and between 7 and 9 for quartz. Swirl the flask and begin titration.

(12) Titrate samples with 0.0100 N H_2SO_4. Add the titrant in increments of several milliliters at a time until the pH drops below 8. At that point slow the addition rate to smaller increments of 0.1–0.5 mL of titrant. Stop the titrant flow when the pH reaches 7.00 and stop swirling; the pH should rise by 0.1–0.2 units. If the final calm pH is greater than 7.00, add enough titrant to compensate. If the titration cannot be stopped at pH 7.00 ±0.02, record the calm pH and the volume of titrant for points around pH 7 and calculate the extract volume of titrant required to reach pH 7 by linear regression or extrapolation methods.

A.4.6 Analysis of Quartz Fiber Filters

In order to reduce background alkalinity retained in the funnel, rinse the Buchner funnel once with boiling water before each analysis of a quartz filter. The alkalinity of quartz filters is more than an order of magnitude lower than that of glass filters; therefore, a lower background is required.

(1) Clamp in place a clean, dry, 250-mL filter flask and a 250-mL filter flask labeled "rinse."

(2) Seat the funnel on the rinse flask.

(3) Fill a graduated cylinder with 100 mL boiling deionized water, pour the water through the funnel and cover the funnel with a watch glass.

(4) through (9)
Same as Steps 1-5 for glass fiber filters.

(10) During the extraction, remove the cover from the funnel, pat the funnel bowl and tip dry with laboratory tissues, move the funnel to the clean dry flask, using forceps place a 7 cm Whatman 41 or 541 filter circle in the funnel and recover. Remove the rinse flask and drain.

(11) through (17)
Same as Steps 6-12 for glass fiber filters.

A.4.7 Analysis of Blanks

Blank flasks are empty flasks that do not contain any filter squares.

(1) through (11)
Same as Steps 1-11 for glass fiber filters.

(12a) FOR BASIC BLANKS: If the initial pH is above 7, titrate slowly with the H_2SO_4 used for samples. See Step 12 for glass fiber filters.

(12b) FOR ACIDIC BLANKS: If the initial pH is below 7, titrate slowly with the 0.005 N NaOH from a 10-mL buret, instead of H_2SO_4. Slow the titrant flow when the pH goes above 6 and stop the flow when pH reaches 6.8–6.9; when swirling is ceased the pH should rise 0.1 to 0.2 units. See Step 12 for glass fiber filters.

A.4.8 Cleanup after Analysis

(1) Wipe and rinse the stir bars, then place in a clean dry place.

(2a) FOR GLASS FILTERS: Get the next clean filter flask, mount it on the ring stand, and attach the vacuum line. Remove the used filter with forceps, clean the funnel with laboratory tissues, seat it on the filter flask, add a fresh Whatman 41 or 541 filter with forceps, and cover the funnel.

(2b) FOR QUARTZ FILTERS: Mount the next filter flask and the rinse flask on the ring stand. Attach the vacuum line to the filter flask. Remove the used filter with forceps, clean the funnel with laboratory tissues, seat the funnel on the rise flask and cover.

(3) After each titration, rinse the pH electrode into a waste beaker, then with a laboratory tissue wipe off any condensation on the electrode, and place it in the storage beaker.

(4) As time permits, rinse the Phillips beakers and filter flask thoroughly with a stream of deionized water. Then fill each twice with fresh deionized water discarding the water each time. Fill each a third time with fresh deionized water, add a small Teflon-coated stir bar or clean glass bead and place on a hotplate to boil (as time and space permit).

WARNING

Be sure to use heat-resistant gloves or tongs when handling the hot glassware to prevent burns.

After boiling for at least 5 minutes, discard the water, taking care not to lose the stir bar, drain, and allow to dry thoroughly before reusing. Once per week, or more often as needed, scrub the sides and spout of the Phillips beaker with a clean brush, then rinse thoroughly and boil as above. Store the flask in a clean dry place.

A.5. Calculations

(1) If the titration was not stopped at exactly pH 7.00, then the titrant volume corresponding to pH 7.00 is calculated by extrapolation or linear regression.

(2) Calculate the microequivalents for the samples and the blanks using the following equation:

$$\text{microequivalents} = (\text{mL of titrant}) \times (\text{normality of titrant}) \times 1{,}000.$$

The sign of the blank (or sample) is negative if the titrant was NaOH and positive if the titrant was H_2SO_4.

(3) Next average the blanks for the day:

$$\text{average blank} = \frac{\text{blank}_1 + \text{blank}_2}{2} \quad \text{(microequivalents)}$$

(4) Then calculate alkalinity in microequivalents per gram of sample using the following equation:

$$\frac{\mu\text{eq}}{\text{g}} = \frac{\mu\text{eq of sample} - \mu\text{eq of average blank}}{\text{gram weight of sample}}$$

(5) If units of microequivalents per square centimeter are required:

$$\frac{\mu\text{eq}}{\text{cm}^2} = \frac{\mu\text{eq}}{\text{g}} \times \frac{\text{weight of entire filter (g)}}{\text{surface area of entire filter (cm}^2)}$$

(6) Sample calculation

A filter weighing 4.0432 g was found to have an area of 517.2 cm^2. A 1.005-g filter sample was extracted and the extract titrated with 0.0100 N H_2SO_4. The volume 10.99 mL of titrant corresponded to pH 7.08 and 11.12 mL of titrant corresponded to pH 6.92. Both blanks required H_2SO_4 and had values of 1.0 and 0.8 microequivalents, respectively. Alkalinity is calculated as follows:

Step 1 using linear regression:

The estimated volume of titrant at pH 7.00 in this case equals 11.06 mL; or

Step 1 using extrapolation

The estimated volume of titrant also equals 11.06 mL.

Step 2

$\mu eq = (11.06\ mL) \times (0.0100\ N) \times 1{,}000$

$= 110.6$ microequivalents

Step 3

$$\text{average blank} = \frac{1.0 + 0.8}{2} = 0.9\ \mu eq\ .$$

Step 4

$$\text{alkalinity}\ (\mu eq/g) = \frac{(110.6 - 0.9)\ \mu eq}{1.005\ g}\ .$$

Step 5

$$\text{alkalinity}\ \frac{\mu eq}{cm^2} = \frac{4.0432\ g}{517./2\ cm^2} \times \frac{109.2\ \mu eq}{g} = 0.854\ \frac{\mu eq}{cm^2}\ .$$

A.6 Quality Control

Prepare a total of nine Phillips beakers for analysis each day; leave two empty as blanks. The sample analysis order is: two samples, one blank, three samples, one blank, two samples. Two samples should be from filters previously analyzed. Number the Phillips beakers and filter flasks from 1 to 9 and rotate the position each day so all glassware pairs eventually are used for a blank analysis. An example of the glassware and sample order for a week is given in Table A-3.

TABLE A-3. GLASSWARE AND SAMPLE ORDER

Day 1		Day 2		Day 3		Day 4		Day 5	
Glass	Sample	Glass	Sample	Glass	Sample	Glass	Sample	Glass	Sample
1	S-1	2	S-8	3	S-13	4	S-18	5	S-23
2	S-2	3	S-9	4	S-14	5	S-19	6	S-24
3	B-1	4	B-3	5	B-5	6	B-7	7	B-9
4	S-3	5	S-10	6	S-15	7	S-20	8	S-25
5	S-4	6	S-1	7	S-9	8	S-16	9	S-18
6	S-5	7	S-11	8	S-16	9	S-21	1	S-26
7	B-2	8	B-4	9	B-6	1	B-8	2	B-10
8	S-6	9	S-12	1	S-17	2	S-22	3	S-27
9	S-7	1	S-5	2	S-1	3	S-13	4	S-4