Monitoring Stations

SLAMS - State and Local Air Monitoring Stations

NAMS - National Air Monitoring Stations

PAMS - Photochemical Assessment Monitoring Stations

CMS - Core Monitoring Stations

SPMS - Special Purpose Monitoring Stations

Office of Air Quality Planning and Standards

U.S. Environmental Protection Agency

APTI 470
Quality Assurance for Air Pollution Measurement Systems

Introduction

- Scope
- Applicability
- Conventions
- Reference and Equivalent Methods

Scope

- Formal specifications for $PM_{2.5}$ samplers in 40 CFR Part 50, Appendix L
- Clarifications and supplemental QA guidance in Section 2.12 of QA Handbook, Vol. II, Part II, as well as Vol. II, Part I
- Emphasis of Section 2.12 on operational aspects
- QA guidance provided to achieve data quality objectives (DQOs)
- DQO process is driving force for QA system
- Goals for acceptable measurement uncertainty

Measurement Uncertainty Goals

- < 10% coefficient of variation (CV) for total precision
- ± 10% of the audit value for total bias
- Accuracy goals for the sampler's flow rate

Accuracy Goals for Sampler's Flow Rate

- ± 2% of the audit device during multipoint verification/calibration
- ± 4% during one-point verification checks and audits
- ± 5% of the sampler's design flow rate of 16.67 L/min

Applicability of Section 2.12

- State and Local Air Monitoring Stations (SLAMS)
- Other organizations conducting SLAMS or SLAMS related $PM_{2.5}$ monitoring
- Recommendations and guidance are non-mandatory or nonbinding

Conventions

- *Shall* and *must* refer to mandatory method requirements.
- *Should* refers to an activity or procedure strongly recommended.
- *May* refers to an activity or procedure that is optional or discretionary.

Reference Methods

- Sampler design and performance specifications are in Appendix L of 40 CFR Part 50.
- Sampler design specifications
- Sampler performance specifications

Sampler Design Specifications

- Sampler inlet
- Downtube
- Impactor
- Impactor filter
- Filter holder assembly
- Flow rate measurement adaptor
- Internal surfaces finish
- Sampling height

Sampler Performance Specifications

- Sample flow rate
- Sample air flow rate control system
- Sampler flow rate regulation
- Flow rate cut off
- Flow rate measurement
- Leak test capabilities

Sampler Performance Specifications
(continued)

- Ambient temperature
- Relative humidity
- Pressure operational requirements
- Clock/timer system
- Data reporting requirements

Equivalent Methods

- More flexible in design, configuration, and operating principle
- New measurement technologies allowed
- Must demonstrate comparability to reference method
- Requirements specified in 40 CFR Part 53
- Three classes acceptable
    - Class I
    - Class II
    - Class III

Limitations of Reference and Class I Equivalent Methods

- Air flow rate must be maintained.
- Changes in weight are affected by sample mishandling, chemical reactions, and volatilization.
- Buildup of electrostatic charge on filters during their manufacture or during sampling can cause error.

Personnel Qualifications, Training, and Health and Safety Warnings

- Personnel Qualifications
- Training
- Health and Safety Warnings

Personnel Qualifications

- Laboratory personnel
- Field personnel

Laboratory Personnel Qualifications

Laboratory personnel should be able to

- measure temperature, relative humidity, and pressure.
- operate microbalance and antistatic devices.
- use common methods to determine temperature, pressure, flow rate, and relative humidity in the field.
- record and enter data into AIRS and other databases.

Field Personnel Qualifications

Field personnel should be able to

- operate the $PM_{2.5}$ sampler.
- calibrate, audit, maintain, and troubleshoot the sampler.
- use common methods to determine temperature, pressure, flow rate, and relative humidity in the field.
- record and enter data into AIRS and other databases.

Training Program for $PM_{2.5}$ Measurements

- Train field personnel familiar with PM_{10} and TSP measurements.
- Train laboratory personnel familiar with weighing room techniques.
- Study Section 2.12 of QA Handbook, and Federal Register $PM_{2.5}$ rulemaking.
- Develop a training manual and operations checklist.

Training Program for $PM_{2.5}$ Measurements
(continued)

- Develop local detailed SOPs and QAPP.
- Attend State/Regional workshops and EPA sponsored training programs.
- Use on-the-job training.
- Administer hands-on testing procedures.

Health and Safety Warnings

- Electrical
- Chemical
- Equipment placement and stability

$PM_{2.5}$ Concentration Calculation

$$PM_{2.5} = M_{2.5}/V_a$$

Where:

$PM_{2.5}$ = $PM_{2.5}$ mass concentration, $\mu g/m^3$

$M_{2.5}$ = total mass collected, μg

V_a = total sample volume, m^3

470-17-24

Sampler Design Illustration

Inlet of the $PM_{2.5}$ sampler

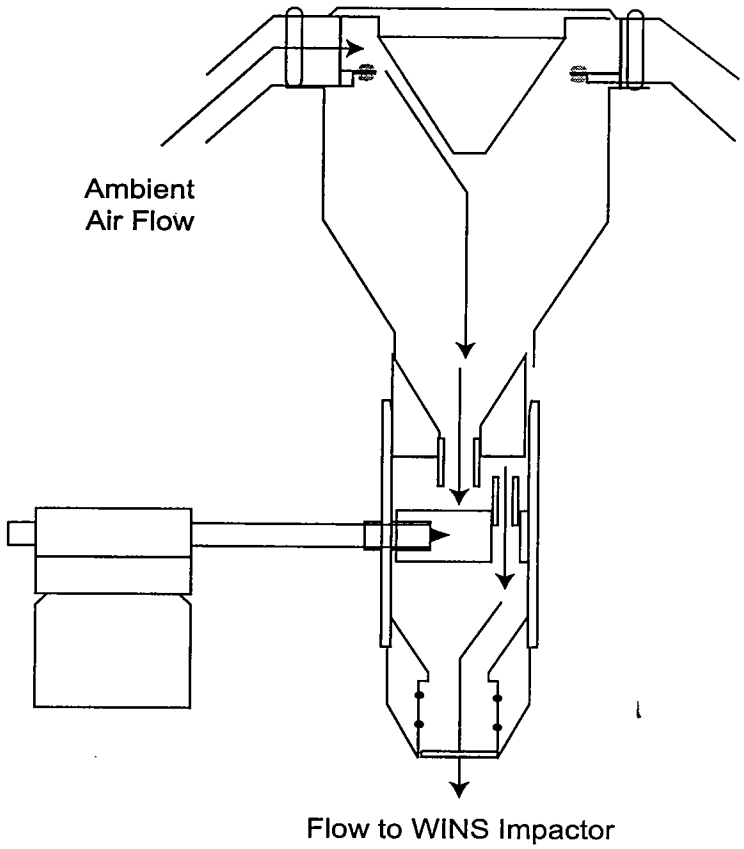

470-17-25

Sampler Design Illustration

Impactor and filter holder assembly

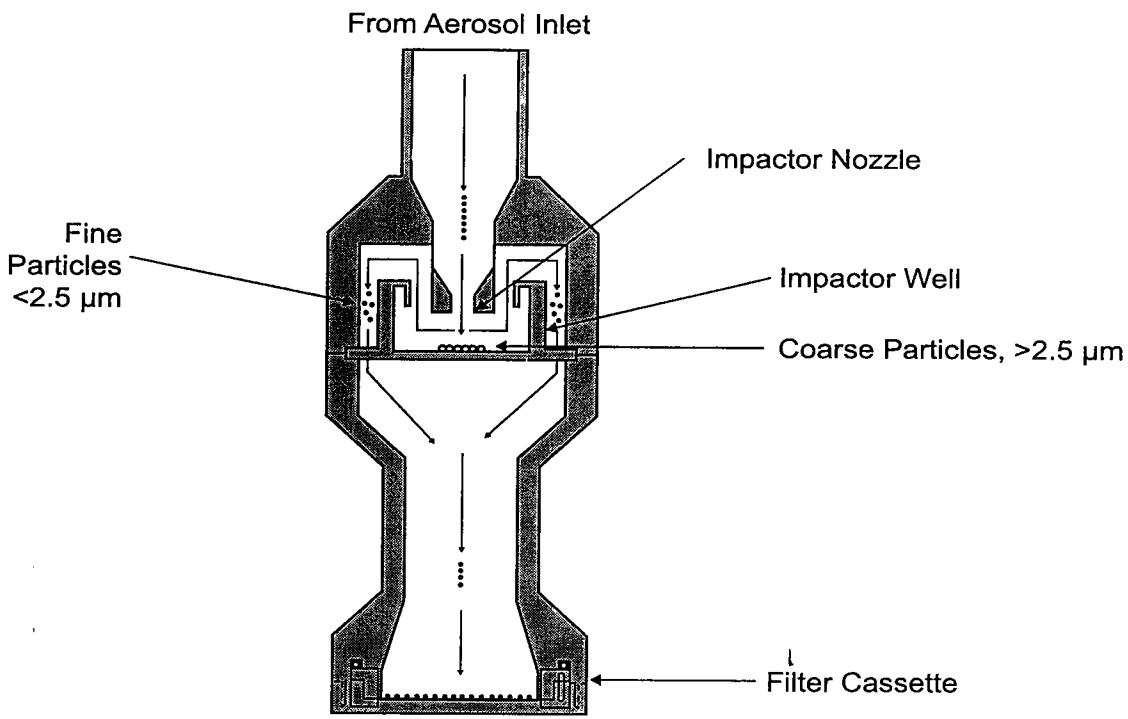

470-17-26

Field QA/QC Checks

- Requirements (such as calibration standards, calibration/verifications)
- Frequency of checks
- Acceptance criteria
- CFR reference
- QA Handbook Vol. II, Part II, of Section 2.12

Calibration Standard for Flow Rate Transfer Standard

- Frequency - 1/yr
- Acceptance criteria - ± 2% of NIST traceable std.
- CFR reference - Part 50, App. L, Sec. 9.1, 9.2
- Section 2.12 reference - Sec. 6.3.3
- Information provided - Certification of traceability

Calibration/Verification for a Flow Rate Calibration

- Frequency - If multipoint failure
- Acceptance criteria - ± 2% of transfer standard
- CFR reference - Part 50, App. L, Sec. 9.2
- Section 2.12 reference - Sec. 6.3
- Information provided - Calibration drift and memory effects

Laboratory QA/QC Checks

- Requirements (such as blanks, accuracy, precision)
- Frequency of checks
- Acceptance criteria
- CFR reference
- Section 2.12 reference

Laboratory Blanks

- Frequency - 10% or 1 per weighing run
- Acceptance criteria - ± 15 µg difference
- CFR reference - Part 50, App. 1, Sec. 8.2
- Section 2.12 reference - Subsection 7.7
- Information provided - Laboratory contamination

Balance Audit

- Frequency - 1 per year
- Acceptance criteria - ± 15 µg for unexposed filters
- CFR reference - none
- Section 2.12 reference - Subsection 7.2
- Information provided - Verification of equipment operation

Summary of Sampling Procedures

- Prepare for site visit.
- Assemble equipment and supplies.
- Install filter cassette and begin sample run.
- End sample run and remove filter cassette.

Procurement and Acceptance Testing of Equipment and Supplies

- Field operation equipment
- Laboratory operation equipment

Field Operation Equipment Acceptance Test

- Equipment - Reference or equivalent method sampler
- Acceptance checks
  - Sampler and accessories must be complete with no evidence of damage.
  - Model must be designated as reference or equivalent method sampler.
  - Pump and display must work.

Field Operation Equipment Acceptance Test
(continued)

- Acceptance limits - Specifications outlined in 40 CFR Part 50, Appendix L
- Action if requirements are not met - Reject sampler

Laboratory Operation Equipment

- Filter media
- Filter cassettes and containers
- Shipping and filter-handling container
- Analytical microbalance
- Mass reference standards

Filter Media Acceptance Testing

- Equipment - filters, Teflon®
- Acceptance check - Must be correct type and undamaged
- Acceptance limits - Type as described in 40 CFR Part 50, Appendix L
- Action if requirements are not met - Reject filters

Analytical Microbalance

- Capacity - 100 to 200 μg
- Size (pan/opening) - sufficient room to weigh 46.2 mm diameter filters
- Minimum readability - ± 1 μg
- Repeatability - 1 μg

Sampler Installation

- Spatial and temporal scales
- Probe siting
- Safety, electrical, and security considerations
- Installation procedures

Spatial and Temporal Scales

- Most $PM_{2.5}$ monitoring in urban areas should be representative of a neighborhood scale.
- Regional transport should be characterized by urban or regional scales.
- Microscale sites may be used.
- However, core SLAMS on this scale should be limited to urban sites that are representative of long-term human exposure and many such microenvironments in the area.

Siting Requirements

- Unobstructed air flow must be minimum of 2 m in all directions.
- Sufficient room for a collocated sampler is required.
- Vertical placement must be 2 to 15 m above ground level.
- Microscale sites sampler inlet must be 2 to 7 m above ground level.

Siting Requirements
(continued)

- If collocated $PM_{2.5}$ sampler, spacing must be $\geq$1m.
- Spacing between inlets must be no more than 4m.
- Inlet heights of both samplers should be within 1mm of each other.

Considerations for Sampler Installation

- Safety
  - Must be located where operator can reach it safely regardless of weather
  - If on rooftop, must be slip proof during inclement weather
  - Must be relatively easy to transport all necessary supplies and equipment

Considerations for Sampler Installation

- Electrical
  - Must operate at 105 to 125 volts, AC, and frequency of 59-61 Hz
  - May require slow blow fuse
  - Should have stable power source
  - Must have enough power to run collocated sampler and an FRM performance evaluation sampler simultaneously

Considerations for Sampler Installation

- Security
  - Depends on location
  - Rooftop sites - locked access
  - Ground-level sites - fence
  - Fences - chain-linked or similar to avoid obstruction of air flow
  - Sampler inlet - extend above fencetop

Installation Procedures

- Sampler receipt
- Laboratory evaluation
- Sampling site setup
- Field evaluation

Calibration Procedures

- General aspects
- Calibration of flow rate
- NIST traceability and certification
- Generic calibration procedure
- Calibration of temperature and pressure sensors
- Leak checks
- Calibration and verification frequencies

Overview of Calibration Procedure

- Multipoint calibration
- Multipoint verification
- Single point verification

Calibration of Flow Rate Measurement System

- General requirements and guidance
- Flow rate calibration standards

470-17-50

General Requirements and Guidance

- Measurements must be based on actual volumetric units.
- Q_a is actual volumetric flow rate measured at existing conditions of temperature and pressure.
- V_a is the air volume measured or expressed at ambient (actual) conditions of temperature and pressure.

Flow Rate Calibration Standards

- Bubble flowmeters
- Piston flowmeters
- Mass flowmeters
- Orifice devices
- Laminar flow elements
- Wet test meters
- Dry test meters

National Institute of Science and Technology (NIST) Traceability and Certification

- Flow rate standard should have its own certification and should be traceable to other standards, which are traceable to an NIST standard.
- Other standards should be checked for accuracy and stability.
- Recertification should be conducted annually.

Generic Flow Rate Calibration Procedure

- Ensure sampler temperature and sensors are calibrated.
- Equilibrate flow rate calibration device to ambient conditions.
- Install filter cassette with an unused filter.
- Warm up sampler for 10 to 15 minutes.
- Remove sampler inlet and replace with flow calibration device.

Generic Flow Rate Calibration Procedure
(continued)

- Follow multipoint flow calibration instructions in operator's manual.
- After completing calibration, turn off sampler pump, remove filter and filter cassette, remove flow calibration device, and replace the sampler inlet.

Calibration of Sampler Temperature Sensors

- General requirements
- Temperature calibration standards
- NIST traceability and certification
- Generic calibration procedure

General Calibration Requirements for Temperature Sensors

- A multipoint (at least three temperature points) calibration followed by a single point verification must be performed annually.
- Three separate temperature measurements must be evenly spaced over operational ambient temperature range.
- Ambient air and filter temperature are monitored.

General Calibration Requirements for Temperature Sensors
(continued)

- Ideally temperature calibrations should occur at the field; however indoor location may be preferable.
- Monthly verification should consist of one temperature measurement made at sampler's operating temperature.
- One point verification may be substituted for a three point calibration, if three-point calibration is conducted upon initial installation and at least annually thereafter.

General Calibration Requirements for Temperature Sensors
(continued)

- Complete three-point calibration must be conducted if one-point verification shows difference of ± 4°C from standard temperature.
- One-point verification should be done following the three-point calibration.

Temperature Calibration Standards

- Insulated vacuum bottles (thermos bottles)
- Solid cylinders of aluminum metal
- ASTM or NIST traceable mercury-in-glass thermometer

NIST Traceability and Certification

- Temperature standard must have its own certification traceable to NIST primary standard.
- Calibration relationship to temperature standard is established accurate to within 0.5°C over range of ambient temperatures.
- Temperature standard must be reverified and recertified at least annually.

Generic Temperature Calibration Procedure

- Remove ambient temperature sensor from radiation shield and place in constant temperature bath while still connected to the sampler's signal conditioner.
- Prepare a container for the ambient temperature water bath and ice slurry bath.
- Wrap sensor(s) and a thermometer with rubber band and immerse both in ambient temperature bath.

Generic Temperature Calibration Procedure
(continued)

- Allow temperatures to equilibrate.
- For each thermal mass, make five measurements.
- Accurately read meniscus of thermometer avoiding parallax errors.
- Average the five readings and record all readings.

Calibration of Sampler Pressure Sensors

- General Requirements
- Calibration Procedure

General Requirements

- Sampler should have the capability to measure the barometric pressure of the ambient air over a range of 600 to 800 mm Hg.
- Resolution must be to within 1 mm Hg with a NIST traceable accuracy of $\pm$ 5 mm Hg.

General Requirements
(continued)

- Barometer can be calibrated by comparing it with a secondary standard traceable to a NIST primary standard.
- Field barometer used to calibrate the sampler's pressure sensor must have a resolution to within 1 mm Hg with an accuracy of ± 5 mm Hg.

General Requirements
(continued)

- Fortin mercurial barometer is best employed as a higher quality laboratory standard for certification of the aneroid barometer.
- Precision aneroid barometer, though less accurate than the Fortin mercurial barometer, can be transported with less risk and presents no hazard form mercury spills.

General Requirements
(continued)

- Sampler pressure sensor can be left in the sampler during the comparison.
- Protect all barometers from violent mechanical shock and sudden changes in pressure.

Calibration Procedures for Fortin Type Barometer

- Read temperature from thermometer to nearest 0.1°C.
- Lower mercury level in cistern until index pointer is cleared, and raise level until dimple barely appears on the surface of mercury.
- Tap barrel, adjust vernier so base just cuts off light at the highest point of the meniscus, and avoid parallax errors.
- Read height of the mercury column.

Calibration Procedures for Aneroid Type Barometer

- Always use and read an aneroid barometer when it is in the same position (vertical or horizontal) as it was when calibrated.
- Locate the portable aneroid barometer next to the laboratory's primary standard.
- If the aneroid barometer has mechanical linkages, tap its case to overcome bearing drag.
- Read the aneroid barometer to the nearest 1 mm Hg.

Leak Checks

- External checks - sampler components to be subjected to this leak test include all components and their interconnections.
- Internal filter bypass check - determine if any portion of the sample flow that leaks past the sample filter without passing through the filter is significant relative to the design flow rate for the sampler.

Frequency of Calibrations and Verifications

- Flow rate measurement system
- Temperature
- Pressure

Flow Rate Calibration/Verification Frequency

- Multipoint verification should take place on installation, then at least annually, or when out of specification or following any major electrical or mechanical maintenance.
- Multipoint calibration is required upon failure of flow rate multipoint verification.
- Single point flow rate verification should take place every 4 weeks.

Temperature Calibration/Verification Frequency

- Temperature multipoint verification is recommended on installation, then annually or when out of specifications.
- Temperature multipoint calibration for both ambient air inlet and filter temperature sensors is required upon failure of multipoint verification.
- Temperature single point verification of ambient air inlet sensor and filter temperature sensor should be done every 4 weeks.

Pressure Calibration/Verification Frequency

- Pressure multipoint calibration is recommended on installation, then annually or when out of specifications.
- Pressure single point verification is recommended every 4 weeks.

Filter Preparation and Analysis

- Microbalance
- Microbalance environment
- Mass reference standards
- Filter handling
- Filter integrity checks
- Filter blanks
- Other checks

470-17-76

Microbalance

- Resolution of 1 μg
- Repeatability of 1 μg

Microbalance Environment

- Climate controlled
- Draft free room or chamber
- Clean area
- Proper grounding to reduce static

Mass Reference Standards

- Range is from 100 to 200 mg.
- Bracket weight of filter.
- Standards tolerance is less than 25 µg.
- Handle with smooth, nonmetallic, clean forceps.
- Verify working standards against NIST traceable primary standards every three to six months.

470-17-79

Filter Handling

- Powder-free gloves
- Smooth, clean forceps
- Clean filter handling container
- Unique identification number
- ^{210}Po antistatic strips, replaced every six months

470-17-80

Filter Integrity Checks

- No pinholes, separation, chaff, loose material
- No filter discoloration
- Uniformity

470-17-81

Filter Blanks

- Lot blanks
- Laboratory blanks
- Field blanks

470-17-82

Other Checks

- Presampling filter conditioning
- Pre- and post- sampling filter weighing
- Internal QC
- Postsampling filter storage
- Postsampling inspection, documentation, and verification
- Postsampling filter equilibration

470-17-83

Quality Assurance Guidance for Air Pollution Measurement Systems

Office of Air Quality Planning and Standards
U.S. Environmental Protection Agency

APTI 470
Quality Assurance for Air Pollution Measurement Systems

Field Operations

- Site visit activities
- Field operation activities to perform every five days
- Field operation activities to perform every four weeks

Site Visit Activities

- Beginning a run
- Ending a sampling period
- Validating samples
- Sample handling

Beginning a Run

- Complete sampling data sheet.
- Ensure sampler is not operating.
- Inspect filter for cleanliness or damage.
- Install filter cassette after O-ring check.
- Program controls for proper start time.
- Visually inspect site and equipment; note any changes in surroundings.

Beginning a Run
(continued)

- Visually inspect records of sampler.
- Check, measure, and record ambient temperature and pressure.
- Ensure that independent measurement of ambient temperature (inlet temperature) and pressure readings taken by sampler are within 4.0°C and 10 mm Hg of the independent readings.

Ending a Sampling Period

- Visually inspect sampler readouts for proper operation.
- Check for problems and record on data sheet.
- Download sampler data.
- Record date, stop time, total time, temperature, pressure, etc.

Validating Samples

- Sampler operating time
- Flow rates
- Filter quality
- Filter temperature
- Exceptional events - field qualifiers

Sample Handling

- Valid samples
- Questionable samples

Field Operation Activities to Perform Every Five Operating Days

- Clean impactor wells.
- Check water trap and empty if necessary.
- Clean interior of sampler.
- Inspect seals.
- Reinstall trap.

Field Operation Activities to Perform Every Four Weeks

- Conduct flow rate verification check.
- Conduct temperature and pressure verification check.
- Conduct leak check.

Sampler Maintenance

- Five sampling day procedure
- Monthly procedure
- Miscellaneous procedures
- Quarterly procedures
- Other periodic maintenance procedures

Five Sampling Day Procedure

- Inspect water collector bottle.
- Remove accumulated water.
- Replace bottle.
- Replace impactor well.
- Disassemble and clean impactor well.

470-18-11

$PM_{2.5}$ Impactor Well and Filter Holder

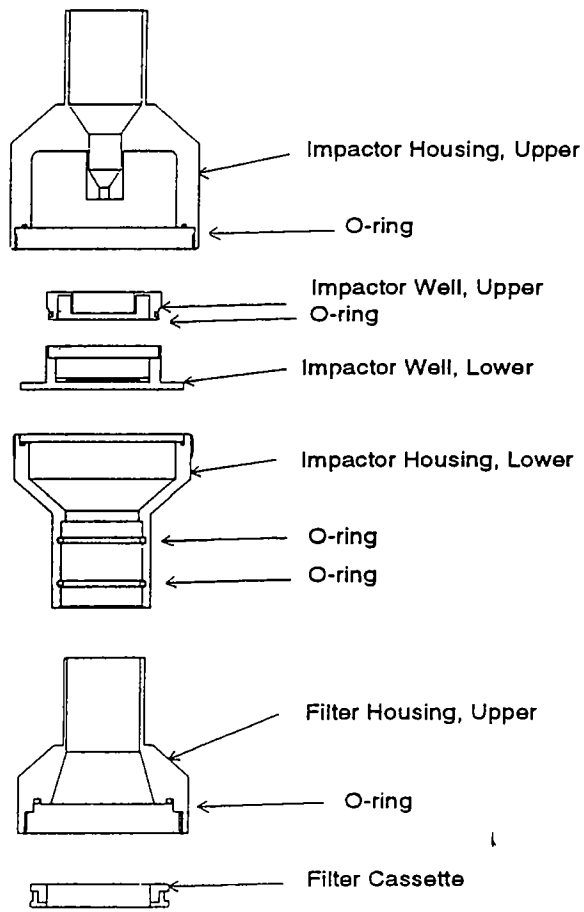

470-18-12

Monthly Procedure

- Sampler inlet
  - Dismantle and clean sampler inlet.
  - Reassemble and reinstall inlet.
- Impactor housing and well
  - Open impactor assembly and inspect interior.
  - Clean and dry assembly.
  - Check O-rings and replace if necessary.

Disassembled Sampler Inlet

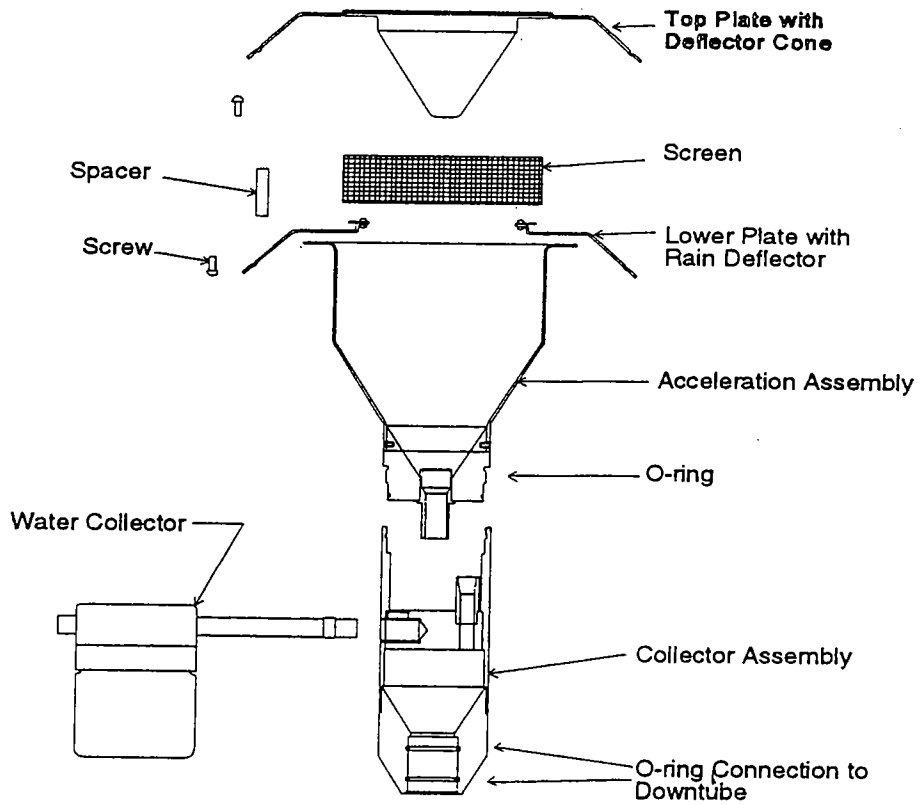

470-18-14

Miscellaneous Procedures

- Clean interior of sampler case.
- Inspect and clean cooling air intake.
- Check internal clock.
- Check foam disks used to transport filter cassettes.
- Check filter cassettes and backing.

Quarterly Procedures

- Remove the O-rings in the aerosol inlet and condition them with a very light coating of vacuum grease.
- Remove the O-rings in the impactor assembly and apply a light coating of vacuum grease.
- Perform examinations of vacuum tubing, tubing fittings, and air intake filter and fans.

Other Periodic Maintenance

- Rebuild vacuum pump.
- Conduct leak check and recalibrate flow system.
- Refurbish sampler.

Performance Evaluation Procedures

- Performance evaluations
- Systems audits

Performance Evaluations

- Sampler Flow Rate Audit
- Temperature Audit
- Pressure Audit
- Assessment of Precision
- FRM Performance Evaluation
- Balance Accuracy Assessment

Sampler Flow Rate Audit

- One measurement is made at the sampler's operational flow rate.
- Flow rate standard used for the audit must not be the same standard used to verify or calibrate the sampler.
- Audit is conducted by the operator or by personnel from the QA unit of the reporting organization.
- Percentage difference should not be greater than ± 4%.

Temperature Audit

- Ambient temperature and filter temperature audits recommended based on the organization's QAPP.
- Audit conducted by reporting organization on a frequency specified in the organization's QAPP.
- Performance goals are those in QAPP.
- Use a bath of water, oil, or other suitable liquid.

Temperature Audit
(continued)

- Thermos bottle or Dewar flask should be used to insulate the bath.
- Three temperatures should be used.
- Any deviation greater than 2°C should be reported for corrective action.

Pressure Audit

- Use calibrated sensor such as an aneroid barometer.
- Audit is conducted by reporting organization.
- Audit frequency is specified in QAPP.
- Performance goals are specified in QAPP.
- Deviations greater than 10 mm Hg should be reported for corrective action.

Assessment of Precision

- Collocated sampler results are used to assess measurement system precision.
- Part 58 requires that 25% of primary samplers have another sampler collocated.
- Collocated samplers must collect a sample every sixth day.

Assessment of Precision
(continued)

- Collocated sampler results used by EPA to calculate quarterly and annual precision for each primary sampler and for each designated method used by each reporting organization.
- Data quality objective of 10% coefficient of variation or better is the goal for operational precision of $PM_{2.5}$ monitoring data.

FRM Performance Evaluation

- Accuracy of field $PM_{2.5}$ measurements is defined in a relative sense, by referencing the field measurements to a collocated Federal Reference Method (FRM) sampler.
- Accuracy is defined as the degree of agreement between a field $PM_{2.5}$ sampler and a collocated FRM sampler operating simultaneously and totally independent of site operations.

FRM Performance Evaluation
(continued)

- EPA Regional Offices may be conducting the FRM performance evaluations to assess total measurement system bias.
- 25% of the SLAMS $PM_{2.5}$ primary samplers within each reporting organization will be assessed with an FRM performance evaluation every calendar year.

FRM Performance Evaluation
(continued)

- Every designated FRM or FEM within a reporting organization must
  - have at least 25% of each method designation evaluated.
  - have at least one sampler evaluated.
  - be audited at a frequency of four evaluations per year.

FRM Performance Evaluation
(continued)

- Results from the primary sampler and the duplicate FRM sampler are used by EPA to calculate accuracy of the primary sampler on a quarterly basis, the bias of the primary sampler on an annual basis, and the bias of a single reporting organization on an annual basis.

Balance Accuracy Assessment

- Each State or reporting organization should conduct an internal accuracy assessment of each microbalance on an annual basis.
- Assessment requires the use of an independent set of ASTM Class I standard weights traceable to NIST.
- Weights of 100 and 200 mg are suggested for the audit and must not be the same ones used as working standards.
- Balance display should agree with designated weight of the audit weight to within ± 0.050 mg.

System Audits

- System audit activities
- Internal systems audits by State or Reporting Organizations
- External systems audits by EPA Regional Offices

System Audit Activities

- Initial equilibration, weighing, and transportation of the filters to the sampler
- Site selection criteria assessment
- Equipment installation
- Site security
- Equipment maintenance
- Calibration procedures
- Handling and placement of the filters

470-18-32

System Audit Activities
(continued)

- Proper operation of the sampler and sample collection
- Removal, handling, and transportation of the filter from the sampler to the laboratory
- Weighing, storage, and archival of the sampled filter
- Data analysis and reporting

Calculations, Validations and Reporting of $PM_{2.5}$ Monitoring Data

- Calculations
- Verification of manual calculations and data entry
- Validation of software
- Data reporting

Calculations

- Sample volume
- Net $PM_{2.5}$ mass calculation
- $PM_{2.5}$ concentration calculation

Sample Volume

$$V_a = (Q_{avg} \times t) / 10^3$$

Where:

V_a = total sample volume, actual m^3

Q_{avg} = average sample flow rate over the sample collection period, L/min

t = total elapsed sample collection time, min

10^3 = units conversion, m^3/L

Net $PM_{2.5}$ Mass Calculation

$$M_{2.5} = (M_f - M_i) \times 10^3$$

Where:

$M_{2.5}$	=	total mass of $PM_{2.5}$ collected during the sampling period, µg
M_f	=	final mass of the equilibrated filter after sample collection, mg
M_i	=	initial (tare) mass of the equilibrated filter before sample collection, mg
10^3	=	units of conversion, µg/mg

470-18-37

$PM_{2.5}$ Concentration Calculation

$$PM_{2.5} = M_{2.5}/V_a$$

Where:

$PM_{2.5}$ = $PM_{2.5}$ mass concentration, $\mu g/m^3$

$M_{2.5}$ = total mass collected, μg

V_a = total sample volume, m^3

Verification of Manual Calculations and Data Entry

- Manual Calculations
- Manual Data Entry
- Data Validations

Verification of Manual Calculations

- Gather the raw data sources to be checked.
- Obtain a copy of the resulting data report.
- Independently verify the results based on the raw data.
- Verify that the correct formulas, conversion constants, and reporting units were used.

Verification of Manual Data Entry

- Duplicating keying
- Proofing

Data Verification Purpose

- To verify that the data have been recorded, entered, and calculated correctly
- To screen potential outliers

Data Verification Techniques

- Graphing and visually examining time-series of operating parameter data such as flow checks
- Graphing and visually examining scatter plots of data
- Range checking
- Statistical checking
- Evaluation of goodness-of-fit and linearity
- Review of operators' notes and communication with operators to identify problems

470-18-43

Validation of Software Used to Process $PM_{2.5}$ Data

- Validation is to ensure that there are no incorrectly coded calculations and errors.
- A structured approach to software development, testing, and validation is recommended.
- Software testing is performed.

Example Areas to be Tested

- Correctness of calculations
- Correct assignment of input and output values
- Calculation of statistics
- Operation at the start of the year 2000
- Application of validation procedures, range checks, etc.

Validation of Software Used to Process $PM_{2.5}$ Data

- Use of spreadsheets for processing and managing large data sets is strongly discouraged.
  - Difficult to test thoroughly
  - Can develop new problems as data are added, i.e. predefined data range overflows
- Use of relational databases is preferred.

Data Reporting

- Rounding for data reporting
- Rounding rules for NAAQS comparison

Data and Records Management

- Methodology
- Records to create and retain
- Quarterly reporting requirements

Reasons for Data and Records Management

- Provide information on mechanical problems that occur and document how the problems were corrected.
- Provide a history of warranty repairs.
- Provide a history of in-house repairs and preventive maintenance servicing.
- Document date and site placement details.

Reasons for Data and Records Management
(continued)

- Be a useful source of information at the time of the annual network review .
- Provide evidence to support the quality of PM data submitted to regional and national $PM_{2.5}$ databases.

Methodology for Data and Records Management

- Personnel
- Quality assurance
- Facilities and equipment

$PM_{2.5}$ Records to Create and Retain

- Sampler siting and maintenance records
- Analytical laboratory installation
- Field sampling operation
- Weighing laboratory operation
- QA records

470-18-52

Quarterly Data Reporting Requirements

- Siting documentation
- $PM_{2.5}$ concentration data or sample weight and volume
- Information calculated and provided by the sampler
- Results of all valid precision, bias, and accuracy tests

470-18-53

Assessment of Measurement Uncertainty

- Flow rate audit
- Bias assessment
- Precision

Flow Rate Audit

- Flow rate must be audited each calendar quarter.
- Audit should be scheduled to avoid interference with the regularly scheduled sampling period.
- Times should be selected randomly.
- Accuracy of sampler's flow rate should be within ± 4% of the audit value.
- Audit measured flow rate accuracy should be within ± 5% of the design inlet flow rate (16.67 L/min).

Bias Assessment

- Assessment made from an FRM performance evaluation accomplished in AIRS
- Goal for acceptable bias is between -10% and +10%
- Performance evaluation requirements for SLAMS reporting organizations

FRM Performance Evaluation Requirements for SLAMS Reporting

- At least one sampler must be audited annually.
- At least 25% of each reference and equivalent method designation must be evaluated each year.
- 25% includes collocated sites, including those collocated with FRM samplers.
- Evaluations of the selected monitors must occur at least four times a year.
- All samplers must be evaluated at least once every four years.

470-18-57

FRM Performance Evaluation Requirements for SLAMS Reporting
(continued)

- Should emphasize assessing sites with concentrations around the NAAQS.
- Individual sampler and audit measurements must be reported to EPA.
- EPA will use data to calculate single sampler bias and quarterly average bias for a reporting organization.

Precision

- Assessed by collocating samplers
- Number of collocated samplers
- Location of collocated samplers
- Schedule for operation of collocated samplers

470-18-59

Location of Collocated Samplers

- Place at sites having the highest $PM_{2.5}$ concentrations.
- Emphasize sites expected to be in violation of the NAAQS.

Location of Collocated Samplers (continued)

SLAMS reporting organizations that have areas in violation of the NAAQS should place their collocated samplers as follows:

- With sites reporting $PM_{2.5}$ concentrations equal to or exceeding 90% of the NAAQS,
  - 80% of the collocated samplers should be located at those sites that have concentrations that equal or exceed 90% of the NAAQS.
  - the remaining 20% of the collocated samplers should be located at sites that have concentrations less than 90% of the NAAQS.

470-18-61

Location of Collocated Samplers (continued)

- Without sites reporting concentrations exceeding 90% of the NAAQS,
  - 60% of the collocated samplers should be located at sites that rank in the top 25% of the highest $PM_{2.5}$ concentration sites.
  - the remaining 40% of the collocated samplers should be distributed among the remaining 75% of the sites.

Number of Collocated Samplers

- At least one reporting sampler within a reporting organization must have a collocated sampler.
- At least one of the collocated samplers must be an FRM sampler.
- At least 25% of all reporting samplers must have collocated samplers.

Number of Collocated Samplers
(continued)

- Collocated samplers for FRM designated reporting samplers shall always be of the identical FRM designation.
- If the reporting sampler is an FEM, half of the collocated samplers must have the identical equivalency designation while the other half are FRM designated samplers.

Schedule for Operation of Collocated Samplers

- Collocated samples should be collected to reflect the normal operation of the primary reporting sampler.
- Collocated samples should be evenly distributed across seasons and days of the week.
- Both the collocated and reporting samplers should be started and stopped at the same time.

470-18-65

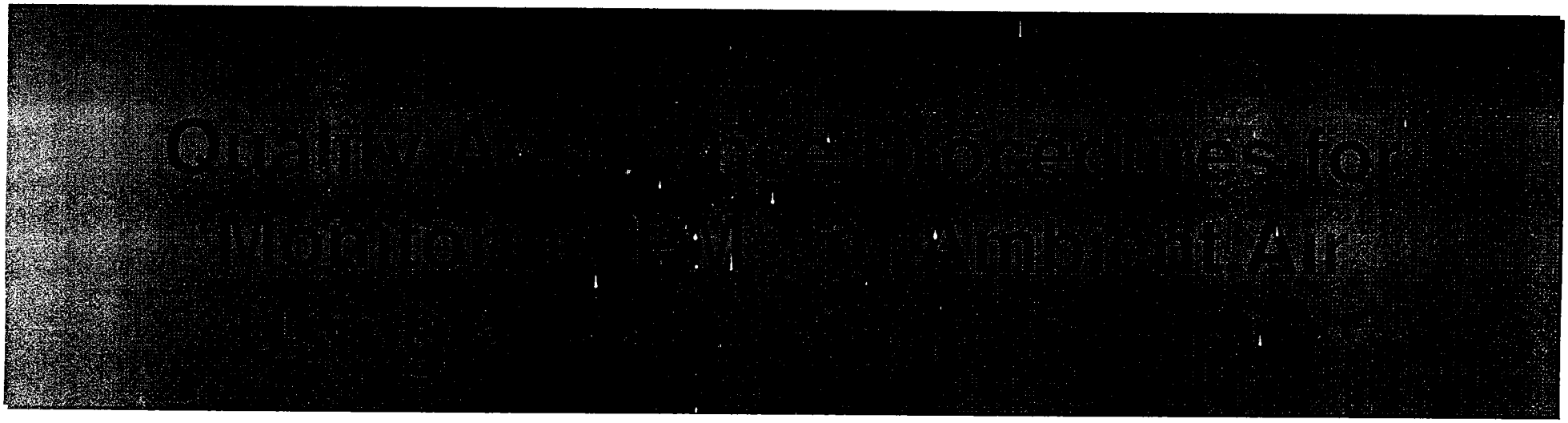

Office of Air Quality Planning and Standards

U.S. Environmental Protection Agency

APTI 470
Quality Assurance for Air Pollution Measurement Systems

Sampler Basic Components

- Sampler inlets
  - Impaction inlet
  - Cyclonic inlet
- Flow control systems
  - Mass flow control (MFC) system
  - Volumetric flow control (VFC) system

Impaction Inlet

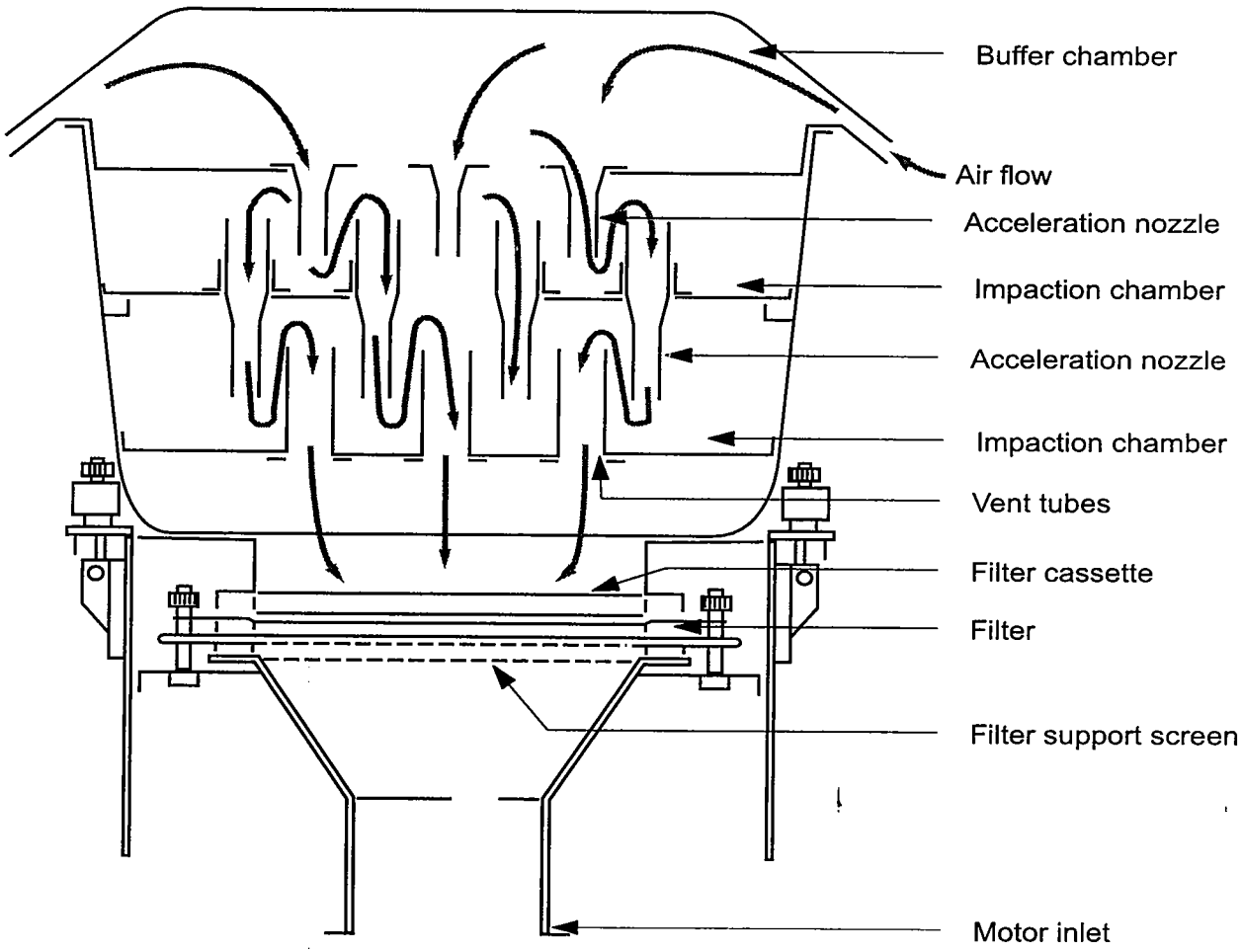

470-19-2

Cyclonic Inlet

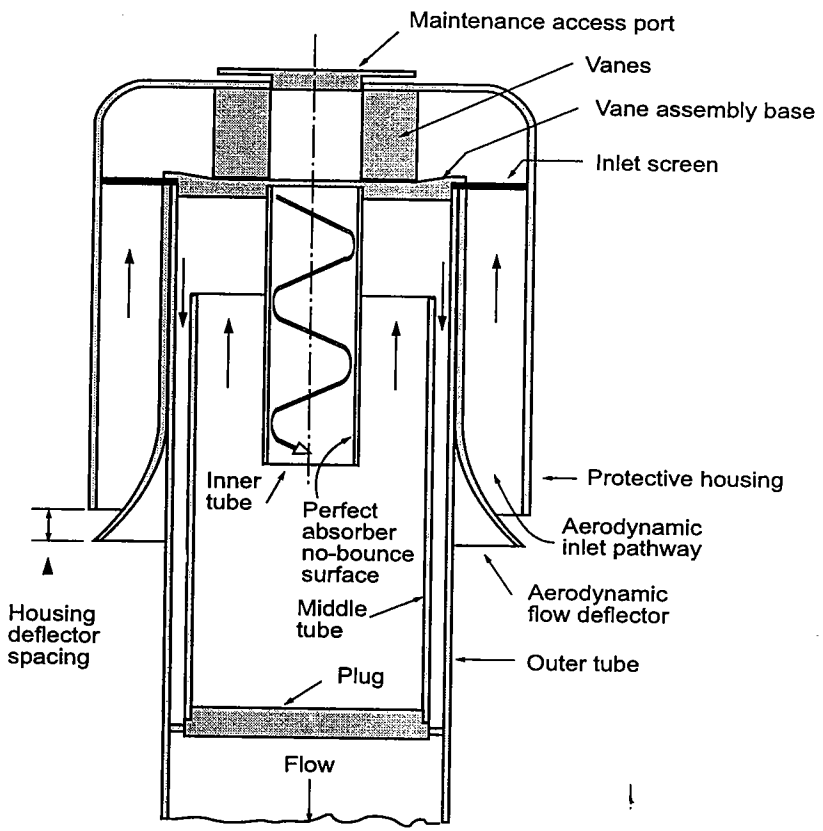

470-19-3

Flow Control Systems

- Mass flow control system
- Volumetric flow control system

Procurement of Equipment and Supplies

- Field Operations
- Laboratory Operations

Field Operations

- HV Samplers
- Calibration QA/QC Supplies
- QC Flow-Check Device
- Audit Equipment

HV Samplers

- Must meet EPA operational standards
- Requirements in 40 CFR Part 50, Appendix M

Calibration QA/QC Supplies

- In-house inventory
- Thermometer, range 0 to 50°C, scale 0.1°C, NIST certified
- Barometer, range 500 to 800 mm Hg
- Orifice transfer standard, calibration relationship referenced annually, ± 2%
- Manometer, range 0 to 400 mm H_2O, scale 2 mm

QC Flow-Check Device

- Routine operation
- NIST-traceable
- Volumetric flows of 1.02 to 1.24 m^3/min
- Calibrated annually, within ± 2%
- Same one used for calibration

Audit Equipment

- MUST be a different device

Laboratory Operations

- Filter media
- Filter protection
  - Filter cassettes
  - Protective covering
- Analytical balance
- Mass reference standards

Calibration Procedures

- Overview
- Flow Rate Measurement and General Aspects of PM_{10} Sampler Calibration
- Certification of an Orifice Standard
- Basic Calibration Procedure for MFC Sampler
- Basic Calibration Procedure for VFC Sampler
- HV Sampler Calibration Frequency

Overview

- All sampling and analysis equipment must be properly calibrated.
- PM_{10} reference standards are not available; individual components must be calibrated instead.

Flow Rate Measurement and General Aspects of PM_{10} Sampler Calibration

- Average T_{av} and P_{av} for 24 hr period
- If T_{av} and P_{av} not obtained, use seasonal averages
- Calibration in actual volumetric flow

Certification of an Orifice Standard

- Orifice Calibration Procedure
- Orifice Transfer Standard Calibration Frequency

Orifice Calibration Procedure

- Assemble equipment.
- Record equipment identification numbers.
- Record barometric pressure and temperature.
- Connect orifice transfer standard to inlet.
- Level meter and check for leaks.
- Zero water and mercury manometers.
- Adjust to first flow rate.

Orifice Calibration Procedure
(continued)

- Record initial volume, pass at least 3 m^3.
- Record volume meter's inlet pressure.
- Record elapsed time.
- Calculate volume measured.

ΔVol = Final volume - Initial volume

Orifice Calibration Procedure
(continued)

- Correct to ambient atmospheric pressure.

$$V_a = \Delta Vol\,(P_a - \Delta Hg) / P_a$$

Where: V_a = actual volume at ambient barometric pressure, m^3

ΔVol = actual volume measured by the standard volume meter, m^3

P_a = ambient barometric pressure during calibration, mm Hg (or kPa)

ΔHg = differential pressure at inlet to volume meter, mm Hg (or kPa)

Orifice Calibration Procedure
(continued)

- Calculate actual volumetric flow rate.

$$Q_a = V_a / \Delta Time$$

Where: Q_a = actual volumetric flow rate through the orifice, m^3/min

V_a = actual volume at ambient barometric pressure, m^3

$\Delta Time$ = elapsed time, min

Orifice Calibration Procedure
(continued)

- Repeat for at least four additional flow rates.
- Compute $[(\Delta H_2O) (T_a/P_a)]^{1/2}$ for each flow rate.
- Draw orifice transfer standard calibration curve.
- Calculate the slope (m), intercept (b), and correlation coefficient (r) of the linear least-squares regression.

Orifice Calibration Procedure
(continued)

- Plot regression line on same graph as calibration data
- Readable to 0.02 m^3/min
- Within 2% of line

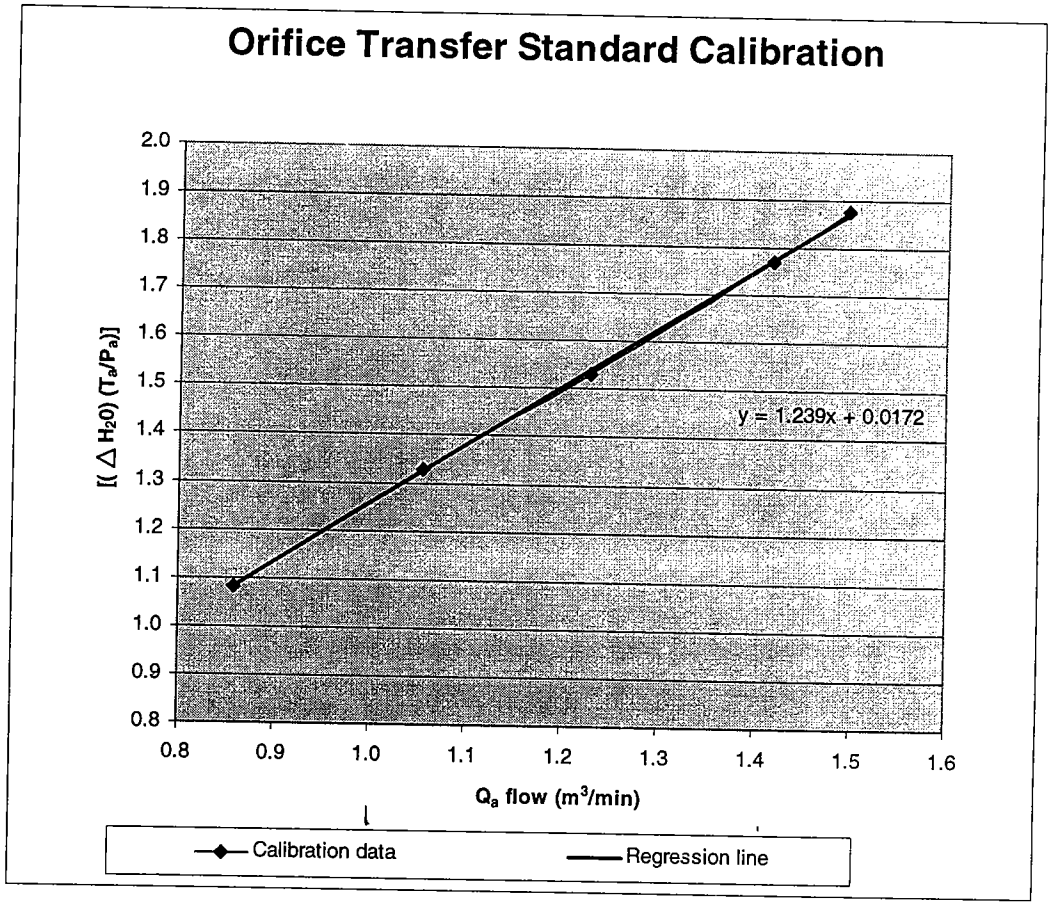

Orifice Calibration Procedure
(continued)

- For future use of the orifice standard, calculate Q_a.

$$Q_a \text{ (orifice)} = \{ (\Delta H_2O) (T_a / P_a)^{1/2} - b\} \{1/m\}$$

Orifice Calibration Procedure
(continued)

Where:

Q_a (orifice) = actual volumetric flow rate as indicated by the orifice transfer standard, m^3/min

ΔH_2O = pressure drop across the orifice, mm (or in.) H_2O

T_a = ambient temperature during use, K (K = °C + 273)

P_a = ambient barometric pressure during use, mm Hg (or kPa)

b = intercept of the orifice calibration relationship

m = slope of the orifice calibration relationship

470-19-22b

Orifice Transfer Standard Calibration Frequency

- Upon receipt
- At least annually
- When nicks or dents are visible

Basic Calibration Procedure for MFC Sampler

- Overview
- Calibration Equipment
- Multipoint Flow Rate Calibration Procedure
- Calibration Calculations

Overview

- Flow rates are determined by an orifice transfer standard.
- Recommended exit orifice plenum pressure is measured with a 25 cm water or oil manometer.
- Each sampler should have its own dedicated manometer.

Calibration Equipment

- Orifice transfer standard traceable to NIST
- An oil or water manometer with a 0 to 400 mm (0 to 16 in) range, scale division of 2 mm (0.1 in)
- A sampler oil and water manometer with a 0 to 200 mm (0 to 8 in) range, scale division of 2 mm (0.1 in) for measurement of sampler exit orifice plenum pressure

Calibration Equipment
(continued)

- Thermometer range of 0 to 50°C to the nearest 0.1°C traceable to NIST
- Portable aneroid barometer range of 500 to 800 mm Hg, sensitivity to nearest 1 mm Hg, referenced within 5 mm Hg of a barometer of known accuracy annually
- Miscellaneous handtools, calibration data sheets, and duct tape

Multipoint Flow Rate Calibration Procedure

- Set up calibration system.
- Disconnect motor from flow controller.
- Install orifice transfer standard.
- Check all gaskets and replace as needed.
- Select first calibration flow rate, install appropriate resistance plate or adjust the variable orifice valve.
- Conduct leak test.

Multipoint Flow Rate Calibration Procedure
(continued)

- Eliminate any leaks before proceeding.
- Inspect connecting tubing.
- Adjust manometer's sliding scales.
- Connect orifice transfer standard manometer to the orifice transfer standard.
- Connect sampler's exit orifice manometer to the exit orifice plenum port.

Multipoint Flow Rate Calibration Procedure
(continued)

- If a continuous recorder is used, record site location, sampler S/N, date, and operator's initials on the blank side of a clean recorder chart, and install recorder chart.
- Read and record date, location, and operator's signature; sampler S/N and model; ambient barometric pressure; ambient temperature, and orifice S/N and calibration relationship.
- Turn on sampler and allow it to warm up.

Multipoint Flow Rate Calibration Procedure
(continued)

- Install the other resistance plates or adjust the variable orifice value.
- Plot the calibration data.
- Turn off sampler and remove the orifice transfer standard.
- Reconnect the sampler motor to the flow controller.
- Perform calibration calculations.

Calibration Calculations

- Calculate and record Q_a for each calibration point.

$$Q_a\,(\text{orifice}) = \{ (\Delta H_2O)\,(T_a / P_a)^{1/2} - b \}\,\{1/m\}$$

Where:

Q_a (orifice) = actual volumetric flow rate as indicated by the orifice transfer standard, m^3/min

ΔH_2O = pressure drop across the orifice, mm (or in.) H_2O

T_a = ambient temperature during use, K (K = °C + 273)

P_a = ambient barometric pressure during use, mm Hg (or kPa)

b = intercept of the orifice calibration relationship

m = slope of the orifice calibration relationship

470-19-32

Calibration Calculations
(continued)

- Calculate and record ΔP_{ext} for each calibration point.

$$\Delta P_{ext} = [\Delta P_{ex} (T_a + 30) / P_a]^{1/2}$$

Where: ΔP_{ext} = transformed manometer reading

ΔP_{ex} = sampler manometer reading, mm (or in.) H_2O

T_a = ambient temperature, K (K = °C + 273)

P_a = ambient barometric pressure, mm Hg (or kPa)

470-19-33

Calibration Calculations
(continued)

- If a continuous flow recorder is used, calculate the quantity as follows:

$$It = I\,[\,(T_a + 30) / P_a\,]^{1/2}$$

Where: It = transformed flow recorder chart reading

I = flow recorder chart reading, arbitrary units on a square root scale

- Note: If recorder charts with linear scales are used, substitute $(I)^{1/2}$ for I

Calibration Calculations
(continued)

- Plot the calculated Q_a flow rates on the x-axis versus ΔP_{ext} on the y-axis.
- Because Q_a depends on ambient average temperature and pressure, the use of graphic plots is not recommended for future data reduction.
- Use plot to visually assess calibration points to see if any should be rerun.

Calibration Calculations
(continued)

- Plot the regression line.
- For the regression model $y = mx + b$, let $y = \Delta P_{ext}$ and $x = Q_a$ (orifice); therefore

$$\Delta P_{ext} = m [Q_a (\text{orifice})] + b.$$

Calibration Calculations
(continued)

- For the flow recorder, the model is

$$It = m [Q_a (orifice)] + b.$$

Calibration Calculations
(continued)

- Determine m, b, and r.
- Correlation coefficient of $r > 0.990$, no point deviating more than 0.04 m^3/min from the predicted value.

Calibration Calculations
(continued)

- For subsequent sample periods, the flow rate is calculated as follows:

$$\overline{Q_a} = \{ [\overline{\Delta P_{ex}} (T_{av} + 30) / P_{av}]^{1/2} - b \} \{1/m\}$$

470-19-39a

Calibration Calculations
(continued)

Where: $\overline{Q_a}$ = the sampler's average actual flow rate, m^3/min

$\overline{\Delta P_{ex}}$ = average of initial and final sampler manometer readings $(\Delta P_{ex_i} + \Delta P_{ex_f})/2$, mm

T_{av} = average ambient temperature for the sample period, K (K = °C + 273)

P_{av} = average ambient pressure for the sample period, mm Hg (or kPa)

b = intercept of the sampler calibration relationship

m = slope of the sampler calibration relationship

470-19-39b

Calibration Calculations
(continued)

- For the flow recorder, the calculation is:

$$\overline{Q_a} = \{ \bar{I} \ (T_{av} + 30) / P_{av}]^{1/2} - b\} \{1/m\}$$

Where: $\bar{I}$ = average flow recorder reading for the sample period

- If recorder charts with linear scales are used, substitute $(I)^{1/2}$ for I

Calibration Procedure -- VFC Sampler

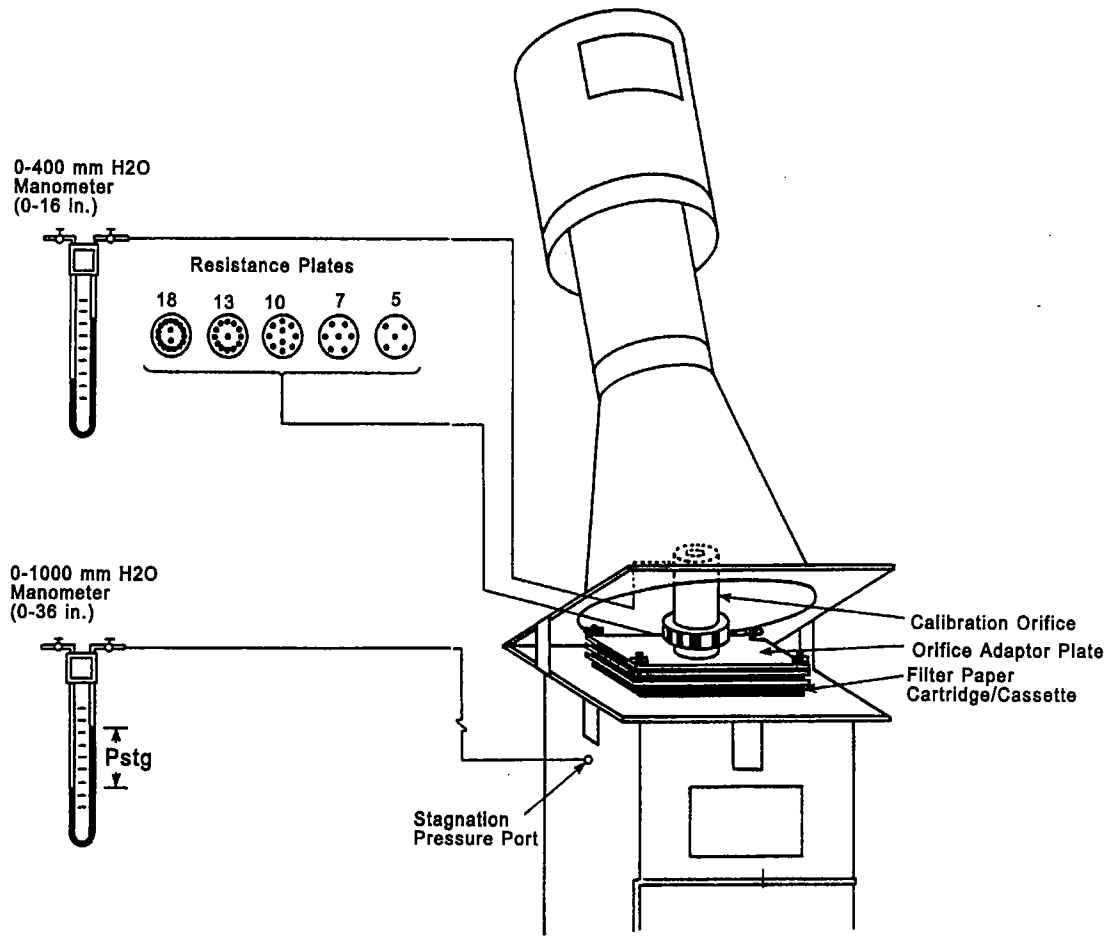

Typical VFC PM_{10} HV sampler

470-19-41

HV Sampler Calibration Frequency

- At least quarterly or annually
- After relocation
- After repairs
- If field calibration flow check exceeds QC limits
- If field flow check audit shows sampler out of calibration

Field Operations

- Siting Requirements
- Sampler Installation Procedures
- Example Sampling Operations for an MFC Sampler
- Sample Validation and Documentation
- Field QC Flow Check Procedure

Siting Requirements

- Spatial scales
- Temporal scales
- Accessibility
- Electricity
- Security

470-19-44

Sampler Installation Procedures

- Inspect upon receipt.
- Perform operational check.
- Transport to field site.
- Follow manufacturer's instructions; bolt to a secure mounting surface.
- Assemble sampler inlet and install.
- Check tubing.
- Perform a multiunit flow rate calibration.

Example Sampling Operations for an MFC Sampler

- Presampling Filter Preparation
- Filter Installation
- Filter Recovery
- Postsampling Filter Handling

Presampling Filter Preparation

- Cassettes can be loaded at sampling site.
- Technicians should wear protective gloves.
- Filters should be kept in protective folders or boxes.
- Never bend or fold filters.
- Consistently label filters on one side.
- Put protective cover over filter cassette.

Filter Installation

- Access filter support screen.
- Examine filter support screen.
- Lower and inspect sample inlet.
- Examine flow recorder; remove any moisture.
- Record the sampler S/N, filter ID number, and site location on back of a clean chart and install the chart in the flow recorder.

Filter Installation
(continued)

- Advance the chart, verify pen rests on zero, adjust as necessary.
- Turn on sampler, equilibrate to operating temperature.
- Record the following parameters:
  - Site location
  - Sample date
  - Filter ID number
  - Sampler model and S/N
  - Operator's initials

Filter Installation
(continued)

- Inspect manometer.
- Measure ΔP_{ex}.
- Verify flow recorder is operational.
- Turn the sampler off.
- Reset the sampler timer.
- Close the sampler door.

Filter Recovery

- Turn on the sampler; equilibrate to operating temperature.
- Measure the final ΔP_{ex} and record.
- Turn off the sampler.
- Remove flow recorder chart, examine trace.

Filter Recovery
(continued)

- Record the following parameters:
  - Elapsed time of the sampling
  - Average recorder response
  - T_{av}
  - P_{av}

Filter Recovery
(continued)

- Calculate and record the average actual flow rate.

$$\overline{Q_a} = \{ [\overline{\Delta P_{ex}} (T_{av} + 30) / P_{av}]^{1/2} - b \} \{1/m\}$$

- For the flow recorder, the calculation is:

$$\overline{Q_a} = \{ \bar{I} (T_{av} + 30) / P_{av}]^{1/2} - b \{1/m\}$$

470-19-53a

Filter Recovery
(continued)

Where: $\overline{Q_a}$ = average sampler flow rate, actual m^3/min

$\overline{\Delta P}$ = average initial and final sampler manometer readings $(\Delta P_{ex_i} + \Delta P_{ex_f})/2$, mm (or in.) H_20

$\overline{I}$ = average flow recorder response, arbitrary units

T_{av} = average ambient temperature for the run day, K

P_{av} = average ambient pressure for the run day, mm Hg or kPa

470-19-53b

Filter Recovery
(continued)

b = intercept of the MFC sampler calibration relationship

m = slope of the MFC sampler calibration relationship

[Note: If charts with linear-function scales are used, substitute $(I)^{1/2}$ for I.]

470-19-53c

Filter Recovery
(continued)

- Observe conditions around the monitoring site.
- Raise the sampler inlet; remove the filter cassette.
- Replace the cassette protective cover.
- Keep filter cassette level; transport it to the laboratory.

Postsampling Filter Handling

- Remove the top frame of the filter cassette.
- Conduct a secondary check.
- Slip folder underneath the edge of the exposed filter.
- Center the filter on folder.

Postsampling Filter Handling
(continued)

- Fold manila folder lengthwise.
- Insert folder into protective envelope.
- Deliver in its protective folder to the analytical laboratory.

Sample Validation and Documentation

- Field Validation
- Laboratory Validation
- Data Documentation

470-19-57

Field Validation

- Timing
- Flow rate

Laboratory Validation

- Check filter for signs of air leakage.
- Check for physical damage.
- Check appearance of particles.

Data Documentation

- Operator who starts the sample
- Operator who removes the sample

Field QC Flow Check Procedure

- MFC Sampler
- VFC Sampler

MFC Sampler

- Determine manometer reading.
- Record ambient temperature and pressure.
- Calculate actual sampler flow rate using sampler's calibration relationship.

VFC Sampler

- Determine relative stagnation pressure.
- Record ambient temperature and pressure.
- Calculate actual flow rate using sampler's calibration relationship.

Filter Preparation and Analysis

- Filter Handling
- Filter Integrity Check
- Filter Equilibration
- Initial Weighing Procedures
- Internal QC
- Post Sampling Documentation and Inspection
- Final Weighing Procedure (Gross Weight)
- Calculation of Net Mass Filter Loading

Filter Handling

- Package tare weighed filters in groups of 50 or less.
- Separate filters with a sheet of tracing paper.
- Assign a filter number to each filter.
- Stack filters in numerical order.
- Ship filters in reinforced envelopes and manila folders.

Filter Integrity Check

- Visually check each filter.
- Check for pinholes.
- Check for loose material.
- Check for filter nonuniformity.
- Check for other imperfections.

Filter Equilibration

- At least 24 hours before weighing
- Relative humidity between 20 and 45%
- Temperature between 15 and 30°C ± 3°C

Initial Weighing Procedures

- Ensure that the balance has been calibrated at least annually.
- Allow balance to warm up for five minutes.
- Begin with zero balance.
- QC supervisor performs “standard” filter QC check.
- Weigh filter.
- Record balance number, filter ID number, and tare weight.

Internal QC

- Standard weight check
- Zero and calibration checks
- Tare and gross weight checks
- QC supervisor responsibilities

Postsampling Documentation and Inspection

- Examine data sheet.
- Remove filter.
- Recover any material dislodged from filter.
- Match filter ID to recorded balance ID numbers.
- Remove filter and examine filter for any damage.
- Remove any embedded insects.

Postsampling Documentation and Inspection

- Place defect-free filters in protective envelope and forward to laboratory for weighing and analysis.
- File data sheets.
- Return defective filters to original protective envelopes.

Final Weighing Procedure (Gross Weight)

- Group filters.
- Place defect-free filters in conditioning environment.
- Repeat steps conducted in filter tare weighing procedure.
- Perform internal QC checks.
- Record gross weight on laboratory data/coding form.

Final Weighing Procedure (Gross Weight)

- Archive filter.
- If further analysis to be performed, return filter to protective covering and note.
- Asterisk to indicate further analysis.
- Forward to laboratory for further analysis.

Calculation of Net Mass Filter Loading

- Gross weight minus the tare weight is the net mass of the particulate.

- Each calculation must be independently validated.

Calculation, Validation, and Reporting

- Calculations
- Calculation Validation
- Data Reporting and Interpretation

Calculations

- Flow rate calculations MFC sampler
- Flow rate calculations VMC sampler
- PM_{10} concentration calculation

470-19-76

Flow Rate Calculations
MFC Sampler

- Determine initial and final manometer reading or average flow recorder trace.
- Determine average ambient temperature.
- Determine average barometric pressure.
- Apply these values to the calibration relationship.

470-19-77

Flow Rate Calculations
VMC Sampler

- Calculate average absolute stagnation pressure.
- Determine ratio of average absolute stagnation pressure to average barometric pressure.
- Determine ambient average temperature.
- Determine average flow rate from average stagnation pressure ratio and average temperature for sample period.

470-19-78

PM_{10} Concentration Calculation

- Determine total volume sampled.
- Determine the net mass in µg.
- Determine mass concentration in $\mu g/m^3$.

470-19-79

Calculation Validation

- Collect total sampling time data, average actual flow rate data, and tare and gross weights.
- Recalculate the total mass concentration.
- If errors found, values in that sample lot should be recalculated.
- Scan all total mass concentration values, investigate if necessary.

Calculation Validation
(continued)

- Recompute the total mass concentration.
- Correct errors found, initial them, and indicate date of correction.
- If exceedingly high or low values still exist, review all raw data.

Data Reporting and Interpretation

- Fully covered in 40 CFR Part 50 Appendix K

470-19-82

Maintenance

- Maintenance Procedures
- Recommended Maintenance Schedules

470-19-83

Recommended Maintenance Procedures

- Dismantling and cleaning impaction inlet as specified by the manufacturer
- Cyclonic inlet
- MFC base
- VFC base
- Refurbishment of HV PM_{10} samplers

470-19-84

Cyclonic Inlet

- Periodically wipe outer tube with disposable wiper.

470-19-85

MFC Base

- Check tubing and power lines.
- Inspect filter screen every sampler recovery day.
- Inspect filter cassette gaskets each time a cassette is loaded.
- Check motor and housing gaskets every 3 months.
- Replace blower motor brushes.

470-19-86

MFC Base
(continued)

- Replace motors as needed.
- Repair or replace recorder as needed.
- Replace recorder pens every 30 recording days.

VFC Base

- Check tubing and power lines.
- Inspect filter screen and throat every sampler recovery day.
- Inspect filter cassette gaskets each time a cassette is loaded.
- Check motor and housing gaskets every 3 months.

470-19-88

VFC Base
(continued)

- Replace blower motor brushes before they become worn.
- Replace motors as needed.

Refurbishment of HV PM_{10} Samplers

- Conduct major repairs or complete refurbishment as needed.
- Leak check and calibrate before resuming field operation.

Auditing Procedures

- Flow Rate Performance Audit for MFC PM_{10} Sampler
- Audit Data Reporting
- Flow Rate Performance Audit Frequency
- Systems Audit

470-19-91

Flow Rate Performance Audit for MFC PM_{10} Sampler

- Transfer audit equipment to field site.
- Instruct operator to install clean filter in the sampler.
- Install the audit orifice transfer standard with no resistance plate.
- Leak test the system.
- Inspect the audit orifice manometer connecting tubing.

470-19-92

Flow Rate Performance Audit for MFC PM_{10} Sampler
(continued)

- Open manometer valves and adjust sliding scale.
- Connect audit manometer to pressure port.
- Turn on sampler and allow it to warm up to operating temperature.
- Observe and record sampler location, date, time, sampler model, sampler S/N, calibration relationship, ambient temperature, ambient pressure, unusual weather conditions, and audit orifice transfer standard S/N and calibration information.

470-19-93

Flow Rate Performance Audit for MFC PM_{10} Sampler
(continued)

- Record pressure drop across the orifice.
- Instruct operator to read sampler exit orifice manometer reading.
- Turn off sampler, remove audit orifice transfer standard, turn sampler on again, repeat previous step for the normal operating flow rate.
- Collect all audit data and verify that correct readings have been recorded.

470-19-94

Flow Rate Performance Audit for MFC PM_{10} Sampler
(continued)

- Determine flow rate through the audit orifice transfers standard.

$$Q_a\,(\text{audit}) = \{\,(\Delta H_2O)\,(T_a\,/\,P_a)^{1/2} - b\}\,\{1/m\}$$

470-19-95a

Flow Rate Performance Audit for MFC PM_{10} Sampler
(continued)

Where:

Q_a (audit) = actual volumetric flow rate as indicated by the audit orifice transfer standard, m^3/min

ΔH_2O = pressure drop across the orifice, mm (or in.) H_2O

T_a = ambient temperature, K (K = °C + 273)

P_a = ambient barometric pressure, mm Hg (or kPa)

b = intercept of the audit orifice transfer standard's calibration relationship

m = slope of the audit orifice transfer standard's calibration relationship

470-19-95b

Flow Rate Performance Audit for MFC PM_{10} Sampler
(continued)

- Instruct operator to calculate sampler's inlet flow rate with and without orifice installed.
- Calculate percentage difference between indicated flow rate and corresponding audit flow rate.

$$\text{Audit flow rate \% difference} = [100]\left[\frac{Q_a\,(\text{sampler}) - Q_a\,(\text{audit})}{Q_a\,(\text{audit})}\right]$$

470-19-96

Flow Rate Performance Audit for MFC PM_{10} Sampler
(continued)

- Record audit flow percentage difference.
- Prior to invalidating any data, double check
  - sampler's calibration.
  - audit orifice transfer standard's certification.
  - all calculations.

470-19-97

Flow Rate Performance Audit for MFC PM_{10} Sampler
(continued)

- Calculate corrected sampler flow rate.

$$Q_a\,(\text{corrected sampler}) = \left[Q_a\,(\text{sampler})\right]\left[\frac{100 - \text{audit \% difference}}{100}\right]$$

- Calculate design flow rate percentage difference.

$$\text{Design flow - rate \% difference} = \left[100\right]\left[\frac{Q_a\,(\text{corrected sampler}) - 1.13}{1.13}\right]$$

470-19-98

Flow Rate Performance Audit for MFC PM_{10} Sampler
(continued)

- Record the design flow rate differences.
- Prior to invalidating any data, double check
  - audit orifice transfer standard's certification.
  - all calculations.

Audit Data Reporting

- Given to the operating agency at the completion of the audit and discussed as necessary
- Not used to make monitoring system modifications
- Post audit verification of the audit equipment and data essential
- Final audit results submitted to the operating agency as soon as possible

470-19-100

Flow Rate Performance Audit Frequency

- Frequency of flow rate audits depends on the use of the data
- For PSD monitoring, audits must be conducted once per sampler quarter
- For SLAMS monitoring audits conducted on at least 25% of the samplers each quarter
- If < 4 PM_{10} samplers, one or more randomly selected samplers readapted so at least one sampler is audited each quarter

470-19-101

Systems Audit

- Data processing
- Analytical process system

Assessment of Monitoring Data for Precision and Accuracy

- Precision
- Accuracy

470-19-103

Precision

- Requires duplicate collocated sampling sites
- 1 to 5 sites = 1 collocated sampling site
- 6 to 20 sites = 2 collocated sampling sites
- > 20 sites = 3 collocated sampling sites
- Collocated samplers should be the same type of sampler
- Must be within 4 m of each other, at least 2 m apart

470-19-104

Precision
(continued)

- Calibration, sampling, and analysis same for all other samplers in the network
- One sampler is primary sampler, other is duplicate sampler
- Duplicate sampler must be operated concurrently with primary at least once per week
- Data from both sites reported
- Precision calculated per 40 CFR Part 58, Appendix A

Accuracy

- Each quarter audit flow rate at least 25%
- Each sampler audited at least once per year
- Four samplers per reporting organization, randomly audit one sampler per quarter
- Auditing performance of the sampler at its specified flow rate
- Accuracy calculated as described in 40 CFR Part 59, Appendix A

470-19-106

Recommended Standards for Establishing Traceability

- ASTM Class 1, 1.1, or 2 weights
- Positive displacement primary standard
- Elapsed time meter checked semiannually
- Accuracy checks conducted at routine intervals traceable to NIST

470-19-107

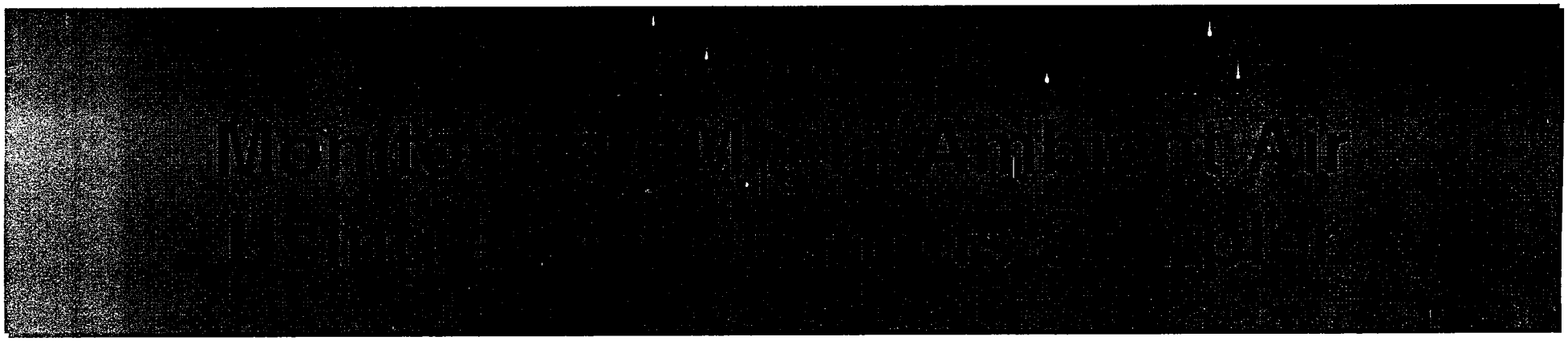

Office of Air Quality Planning and Standards

U.S. Environmental Protection Agency

APTI 470
Quality Assurance for Air Pollution Measurement Systems

Introduction

Approved EPA PM_{10} Reference Methods

- High-volume (HV) PM_{10} sampler
- Dichotomous sampler

Sampler Basic Components

- Sampler inlet
- Size fractionating virtual impactor
- Flow control system

Sampler Inlet

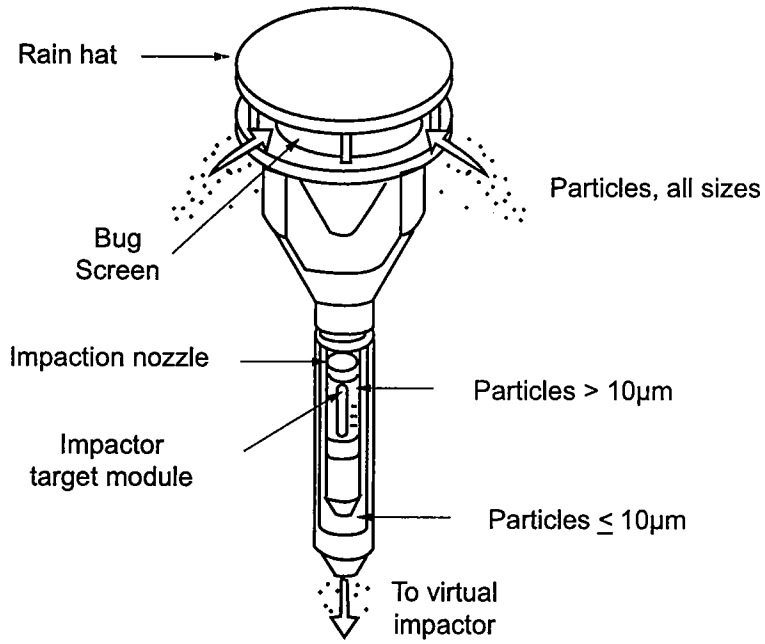

Size Fractionating Virtual Impactor

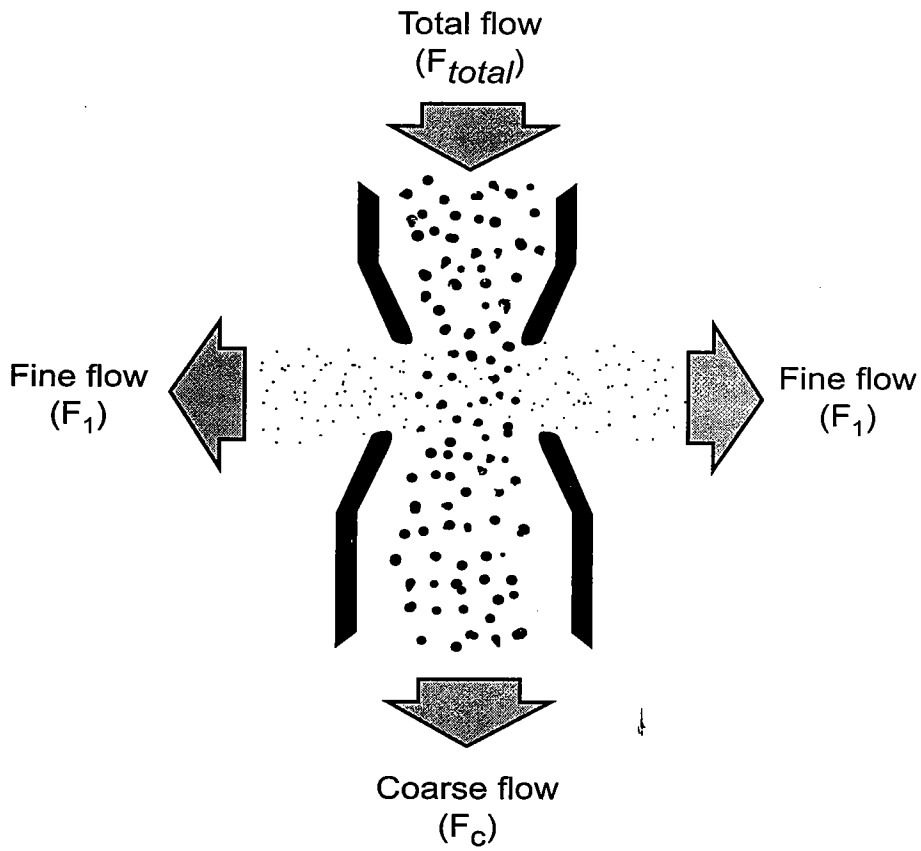

470-20-4

Procurement of Equipment and Supplies

- Field Operations
- Laboratory Operations

Field Operations

- Dichotomous samplers
- Calibration QA/QC supplies
- QC flow-check device
- Audit equipment

Laboratory Operations

- Filter media
- Filter cassettes
- Filter conditioning
- Filter handling
- Analytical balance
- Mass reference standards

Calibration Procedures

- Overview
- Flow rate measurement and general aspects
- Sampling and analysis equipment calibration requirements
- Recommended standard and associated equipment

Overview

- All sampling and analysis equipment must be properly calibrated and recorded in a calibration logbook, on calculation data sheets, or appropriate recording files.

Flow Rate Measurement and General Aspects

- Critical: The flow rate through the sampler must be maintained at or near the sampler's design flow rates.
- Limits should be within ± 10%.

Sampling and Analysis Equipment Calibration Requirements

- Sampler calibration
- Flow-rate transfer standard
- On/off timer
- Elapsed-time meter
- Analytical balance
- Relative humidity indicator
- Mass reference standards

470-20-11

Sampler Calibration

- Frequency - Upon receipt, after maintenance on sampler, and any time audits or flow checks deviate more than ± 7% from the indicated flow rate or ± 10% from the design flow rate
- Acceptance limits - Indicated flow rate = true flow rate ± 4%
- Action if requirements not met - Recalibrate.

Flow-Rate Transfer Standards

- Frequency - Check upon receipt, at 1 yr intervals against primary standard, or if damaged.
- Acceptance limits - Indicated flow rate from previous calibration = actual flow rate ± 2%.
- Action if requirements not met - Adopt new calibration curve.

On/off timer

- Frequency - Check at purchase, routinely on sample recovery days
- Acceptance limits - ± 30 min / 24 hr
- Action if requirements not met - Adjust or repair.

Elapsed-time Meter

- Frequency - 6-month intervals
- Acceptance limits - ± 2 min / 24 hr
- Action if requirements not met - Adjust or replace.

Analytical Balance

- Frequency - Gravimetric test-weighing at purchase and during periodic calibration checks
- Acceptance limits - Sensitivity = ± 1 µg, Precision = 1 µg
- Action if requirements not met - Replace and/or recalibrate.

Relative Humidity Indicator

- Frequency - 6 month intervals
- Acceptance limits - Indicator reading = psychrometer reading ± 6%
- Action if requirements not met - Adjust or replace.

Mass Reference Standards

- Frequency - Check every 3 to 6 months against laboratory primary standards
- Acceptance limits - Standard's tolerance less than 25 µg, handle with smooth, nonmetallic forceps
- Action if requirements not met - Obtain proper standards or forceps.

Recommended Standards and Associated Equipment

- Total and fine flow rates
- Coarse flow rate

Total and Fine Flow Rates

- Laminar flow element (LFE)
- Mass flowmeter (MFM)
- Dry gas meter (DGM)
- Orifice

Laminar Flow Element (LFE)

- Optimum flow range Q_a - 12.0 to 19.0 L/min
- Equipment - LFE thermometer/barometer, manometer, filters, adapter
- Should have filtered air entering LFE
- Subject to fluctuations due to temperature changes
- Manometer used within its temperature range

Laminar Flow Element (LFE)
(continued)

- Must equilibrate

$$(\Delta H_2 0)\,(CF) = Q_a$$

Where:

$\Delta H_2 0$ = pressure drop

CF = correction factor

Q_a = actual flow rate

Mass Flowmeter (MFM)

- Optimum flow range Q_a - 12.0 to 19.0 L/min
- Equipment - MFM, thermometer/barometer, filters, adapter
- Recommended liquid-crystal display (LCD)
- Must equilibrate in ambient conditions
- (Volts) (CF) = Q_{std}

Dry Gas Meter (DGM)

- Optimum flow range Q_a - 12.0 to 19.0 L/min
- Equipment - DGM thermometer/barometer, stopwatch, filters, adapter
- Should time through five revolutions
- Each timing repeated three times

$$\frac{\text{Volume}}{\text{Time}} = Q_a$$

470-20-24

Orifice

- Optimum flow range Q_a - 12.0 to 19.0 L/min
- Equipment - orifice thermometer/barometer, manometer, filters, adapter
- Good only in range $\Delta P \leq 8$ in.

Orifice
(continued)

$$\left[\frac{\Delta H_2O \quad T_m}{P_m \quad M_m}\right]^{1/2} (CF) = Q_a$$

Where:

T_m = upstream absolute pressure

P_m = upstream absolute pressure

M_m = molecular weight of gas

CF = correction factor

Q_a = actual flow rate

470-20-26

Coarse Flow Rate

- Laminar flow element
- Mass flowmeter
- Dry gas meter
- Orifice
- Soap film flowmeter (SFFM)

Soap Film Flowmeter (SFFM)

- Optimum flow range Q_a - 0 to 2 L/min
- Equipment - SFFM stopwatch, plug with adapter, filters
- Caution - can break easily
- Flow in Q_a
- Three timings
- Flow rate in terms of actual conditions

Soap Film Flowmeter (SFFM)

(continued)

$$\frac{\text{Volume}}{\text{Time}}\left[\frac{P_a-(1-RH)\,P_{H_2O}}{P_a}\right]=Q_a$$

Where:

RH	=	fractional relative humidity
P_{H_2O}	=	vapor pressure of water at T_a
Q_a	=	actual flow rate
P_a	=	average ambient pressure

Sampler Calibration Frequency

- Upon installation
- At least annually
- After repairs that might affect calibration
- Whenever field calibration flow check exceeds QC limits
- Whenever an audit shows sampler to be out of calibration

Field Operations

- Siting Requirements
- Sampler Installation Procedures
- Example Sampling Operations
- Field Calibration Check Procedure
- Documentation

Siting Requirements

- Spatial Scales
- Temporal Scales
- Minimum Site Guidelines
- Other Factors

Spatial Scales

- Range: small scale (0.1 to 0.5 km^2) to large scale ($> 1 \times 10^5$ km^2)
- Based on potential impact of particulate pollution
- Should reflect expected impact

Temporal Scales

- Geometric mean concentration or 24 hr average concentration
- Consideration given to prevailing wind direction
- Not ideal for 24 hr concentrations

Minimum Site Guidelines

- Unobstructed air flow 2 m in all directions
- Inlet height of 2 to 15 m above ground
- Collocated minimum spacing 2 m, maximum spacing 4m
- Inlet heights within 1 vertical m

Other Factors

- Accessibility for all weather conditions
- Operator's safety
- Adequate electricity 3 to 5 A (120V a.c., 60 Hz)
- Security of monitoring equipment and operating personnel

Sampler Installation Procedures

- Perform visual inspection upon receipt.
- Perform operational check in laboratory.
- Carefully transport to site.
- Install control module and connect vacuum lines.
- Check tubing for crimps and cracks, and plug in power cord.
- Perform a multipoint flow rate calibration.

470-20-37

Example Sampling Operations

- Specific to the Particular Model
- Pre-sampling Procedures
- Filter Installation (General Procedures)
- Filter Recovery
- Sample Validation and Documentation
- Sample Handling

Example
Pre-Sampling Procedures

- Keep filter cassettes in protective petri dishes.
- Discard damaged filters.
- Mark petri dish with filter ID number, sample ID number, sample collection date, type of sample collected.

Example Filter Installation (General Procedures)

- Switch timer off.
- Unscrew (by hand) knurled filter holder assembly.
- Verify O-ring is in each filter holder.
- Insert cassette into appropriate filter holder.
    - Course-particulate filter centerline of the virtual impact head
    - Fine-particle filter holder offset

Example Filter Installation (General Procedures)

(continued)

- Tighten both knurled filter nuts by hand.
- Switch timer to ON.
- Turn on vacuum pump.

Example Filter Installation (General Procedures)

(continued)

- Record following info on sample data sheet:
  - Filter ID number
  - Sampler model number
  - Sampler serial number
  - Sample location
  - TSP
  - CSP
  - AIRS designation
  - Sample collection date

Example Filter Installation (General Procedures)

(continued)

- Set total flow rate.
- Record total vacuum gauge indication.
- Set course flow rate.
- Record course vacuum gauge indication.
- Turn off sampler.

Example Filter Installation (General Procedures)

(continued)

- Set master timer.
- Reset elapsed time to 0.
- Close front cover.
- Visually inspect monitoring site.

Example Filter Recovery

- Record the elapsed-time indicator value.
- Record following information:
  - final total rotameter reading
  - final coarse rotameter reading
  - final total vacuum gauge reading
  - final coarse vacuum gauge reading.
- Turn the sampler off.
- Reverse the filter installation procedure.
- Remove each filter, one at a time.

Example Filter Recovery
(continued)

- Put the filter cassettes in original marked plastic petri dishes.
- Calculate and record the total and coarse average rotameter readings.

Example Filter Recovery

(continued)

$$\bar{I} = \frac{TSP \text{ or } CSP + IF}{2}$$

Where: $\bar{I}$ = average total or coarse rotameter response, arbitrary units

TSP, CSP = total or coarse rotameter set points, arbitrary units

IF = indicated final total or coarse rotameter response, arbitrary units

470-20-46b

Example Filter Recovery
(continued)

- Record average ambient temperature T_{av} and barometric pressure ~P_{av}.
- Calculate and record the total and coarse average actual flow rates.

470-20-47a

Example Filter Recovery

(continued)

$$\overline{TQ_a} \text{ or } \overline{CQ_a} = 1/m \{\bar{I}(T_{av}/P_{av})^{1/2} - b\}$$

Where: $\overline{TQa}$, $\overline{CQa}$ = sampler total or coarse average flow rate, actual L/min

$\bar{I}$ = average total or coarse rotameter response, arbitrary units

T_{av} = average ambient temperature, K

P_{av} = average ambient pressure, mm Hg or kPa

m = slope of the dichotomous sampler total or coarse calibration relationship

b = intercept of the dichotomous sampler total or coarse calibration relationship

470-20-47b

Example Filter Recovery
(continued)

- Calculate the actual fine flow rate.
- Record calculations.
- Observe conditions around monitoring site.

Sample Validation and Documentation

- Timing
  - ON or OFF within 1/2 hr of midnight
  - Must operate ≥ 23 hr and ≤ 25 hr
- Flow rates
  - Total: 16.7 L/min ± 10%
  - Course: 1.67 L/min ± 10%
- Filter quality - damaged filter invalidated

Sample Handling

- Calculate the total, coarse, and fine flow rate and enter on data sheet.
- Valid sample - Promptly deliver in protective petri dish.
- Invalid sample -
  - Mark "VOID."
  - Do not discard the filter.
  - Promptly deliver to analytical laboratory.
- Questionable sample -
  - Complete as much of data sheet possible.
  - Record as "Questionable."
  - Promptly deliver to analytical laboratory.

470-20-50

Example QC Field Calibration Check Procedure

- Insert clean fine and coarse filters.
- Turn on the sampler to warm up.
- Read and record:
  - ambient temperature (T_a), °C and K.
  - ambient barometric pressure (P_a), mm Hg and kPa.
  - sampler S/N and model.
  - orifice S/Ns and calibration relationships.
  - date, location, and operator's signature.
  - sampler rotameter's target flow rates and target set points.

Example QC Field Calibration Check Procedure
(continued)

- Adjust total and coarse rotameters.
- Remove inlet, replace with flow check orifice device, recheck the rotameter set point.
- Observe the ΔH_2O.
- Determine corresponding flow rate.
- Record manometer deflection value and corresponding flow rate.

470-20-52

Example QC Field Calibration Check Procedure
(continued)

- Calculate total actual flow rate (TQ_a) and record.
- Turn the sampler off.
- Disconnect fine flow vacuum line.
- Install the coarse flow rate orifice.
- Turn the sampler on.
- Observe the ΔH_2O.
- Determine corresponding flow rate.

470-20-53

Example QC Field Calibration Check Procedure
(continued)

- Record manometer deflection value and corresponding flow rate.
- Calculate indicated coarse actual flow rate (CQ_a).
- Calculate the QC percentage difference.

$$\text{QC\% Difference} = 100\left[\frac{(\text{Sampler } TQ_a \text{ or } CQ_a) - \text{Orifice flow rate}}{\text{Orifice flow rate}}\right]$$

470-20-54

Example
Field Calibration Procedure
(continued)

- Turn off sampler, remove orifice device, replace the inlet, reconnect the fine flow vacuum line.
- Remove filters from fine and coarse filter holders.
- Set up the sampler for the next sampling period.

Documentation

- Operator who starts the sample
- Operator who removes the sample

Filter Preparation and Analysis

- Filter Handling
- Filter Integrity Check
- Filter Equilibration
- Initial Weighing Procedures
- Internal QC
- Post Sampling Documentation and Inspection
- Final Weighing Procedure
- Calculation of Net Mass Filter Loading

470-20-57

Filter Handling

- Use nonserrated forceps, nylon gloves.
- Place filters in petri dishes.
- Number sequentially.

Filter Integrity Check

Visually check each filter for:

- pinholes.
- separation of filter ring.
- chaff or flashing.
- loose material.
- discoloration.
- other imperfections.

470-20-59

Filter Equilibration

- 24 hours before weighing
- Relative humidity between 20 and 45%
- Temperature between 15 and 30°C ± 3°C
- Filter conditioned in petri dishes

Initial Weighing Procedures

- Warm up for five minutes.
- Begin with zero balance.
- QC supervisor performs "standard" filter QC check.
- Weigh filter.
- Place tared filter in petri dish.
- Record assigned filter ID number.

Internal QC

- Analyst QC
- Supervisory QC procedure

Post Sampling Documentation and Inspection

- Examine data sheet.
- Examine petri dish for dislodged material.
- Recover any material dislodged from filter.
- Match filter ID with correct laboratory data coding form and group filters according to recorded balance ID numbers.
- Examine filters for damage.

470-20-63

Post Sampling Documentation and Inspection
(continued)

- Reject filters if defects are found.
- Return defective filters to original petri dish and submit to laboratory supervisor.

Final Weighing Procedure

- Group filters.
- Open petri dish.
- Cover open dish.
- Repeat filter tare weighing procedure.
- Ensure validity of reweighing.
- Record gross weight.

Final Weighing Procedure
(continued)

- Archive filter.
- If analyzing further, return filter to petri dish and place asterisk on laboratory data / coding form.
- Forward to laboratory for further analysis.

Calculation of Net Mass Filter Loading

- Gross weight minus the tare weight is the net mass of the particulate.

$$Mf \text{ or } Mc = W_g - W_t$$

Where:

Mf, Mc	=	fine or coarse particulate net mass, mg
W_g	=	gross weight, mg
W_t	=	tare weight, mg

- Each calculation must be independently validated.

470-20-67

Calculation, Validations, and Reporting

- Calculations Using a Dichotomous Sampler
- Calculation Validation
- Data Reporting and Interpretation

Calculations Using a Dichotomous Sampler

- Flow rate calculations
- PM_{10} concentration calculation

Flow Rate Calculations

- Determine average total or coarse rotameter response.

$$\bar{I} = \frac{TSP \text{ or } CSP + IF}{2}$$

Where: $\bar{I}$ = average total or coarse rotameter response, arbitrary units

TSP, CSP = total or coarse rotameter set points, arbitrary units

IF = indicated final total or coarse rotameter response, arbitrary units

Flow Rate Calculations

$$\overline{TQ_a} \text{ or } \overline{CQ_a} = 1/m \left[\bar{I} \left(T_{av}/P_{av} \right)^{1/2} - b \right]$$

Where:

$\overline{TQ_a}$, $\overline{CQ_a}$ = sampler total or coarse average flow rate, actual L/min

$\bar{I}$ = average total or coarse rotameter response, arbitrary units

T_{av} = average ambient temperature, K

P_{av} = average ambient pressure, mm Hg or kPa

m = slope of the dichotomous sampler total or coarse calibration relationship

b = intercept of the dichotomous sampler total or coarse calibration relationship

470-20-71

PM_{10} Concentration Calculation

- Determine total volume sampled.

$$V = \left(\overline{TQ_a}\right)t$$

Where: V = total sample volume, m^3

$\overline{TQ_a}$ = total flow rate corrected to standard conditions, m^3/min

t = elapsed total sampling time, min

PM_{10} Concentration Calculation

- Determine mass concentration.

$$PM_{10} = \frac{(M_f + M_c)10^3}{V}$$

Where:

PM_{10} = mass concentration of PM_{10}, $\mu g/m^3$

M_f = net mass of particulate of the fine filter, mg

M_c = net mass of particulate of the coarse filter, mg

10^6 = conversion factor for mg to µg and L to m^3

V = total sample volume, L

470-20-73

Calculation Validation

- Collect total sample time and average total flow rate data.
- Compute the total mass concentration for seven samples per 100.
- If calculation errors, all values in that sample lot should be recalculated.

Calculation Validation
(continued)

- Scan all total mass concentration values.
- Recompute the total mass concentrations.
- Correct any errors that are found.
- If mass concentration computations appear correct, and exceedingly high or low values still exist, review all raw data for completeness and correctness.

Maintenance

- Maintenance Procedures
- Refurbishing Dichotomous Samplers

Maintenance Procedures Supplies

- Alcohol-based general-purpose cleaner
- Cotton swabs
- Small soft-bristle brush
- Paper towels
- Distilled water
- Miscellaneous hand tools
- Compressed air source (recommended, not required)

Sampler Inlet

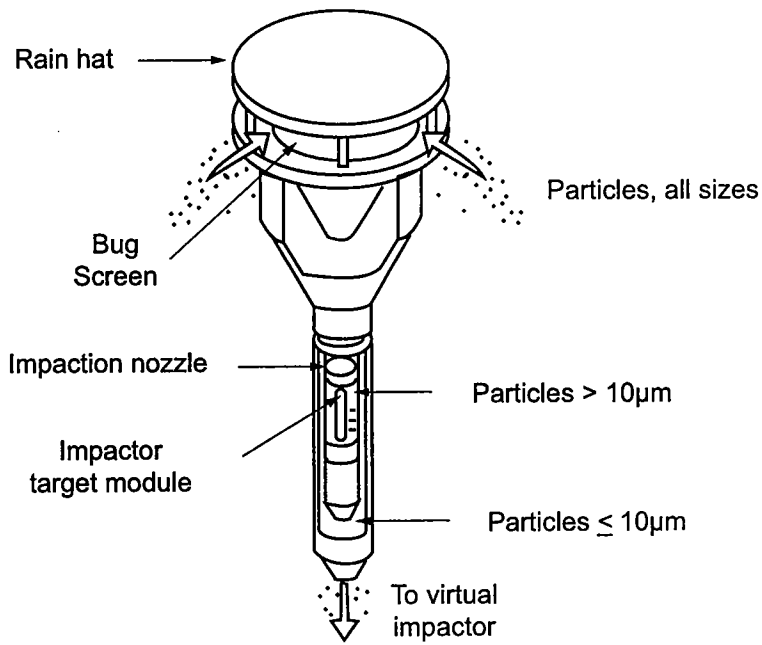

470-20-78

Sampler Inlet
(continued)

- Mark "match marks."
- Dissassemble using manufacturer's instructions.
- Clean all interior surfaces.
- Reassemble using "match marks."

470-20-79

Virtual Impactor Assembly

- Inspect inlet tube every 3 to 4 months.
- Inspect and clean all remaining inner surfaces every 6 to 12 months.
- Use alcohol or water and soft-bristle brush for cleaning.
- Examine sample module vacuum tubing periodically.
- Examine connecting fittings for cross-threading.

Virtual Impactor Assembly

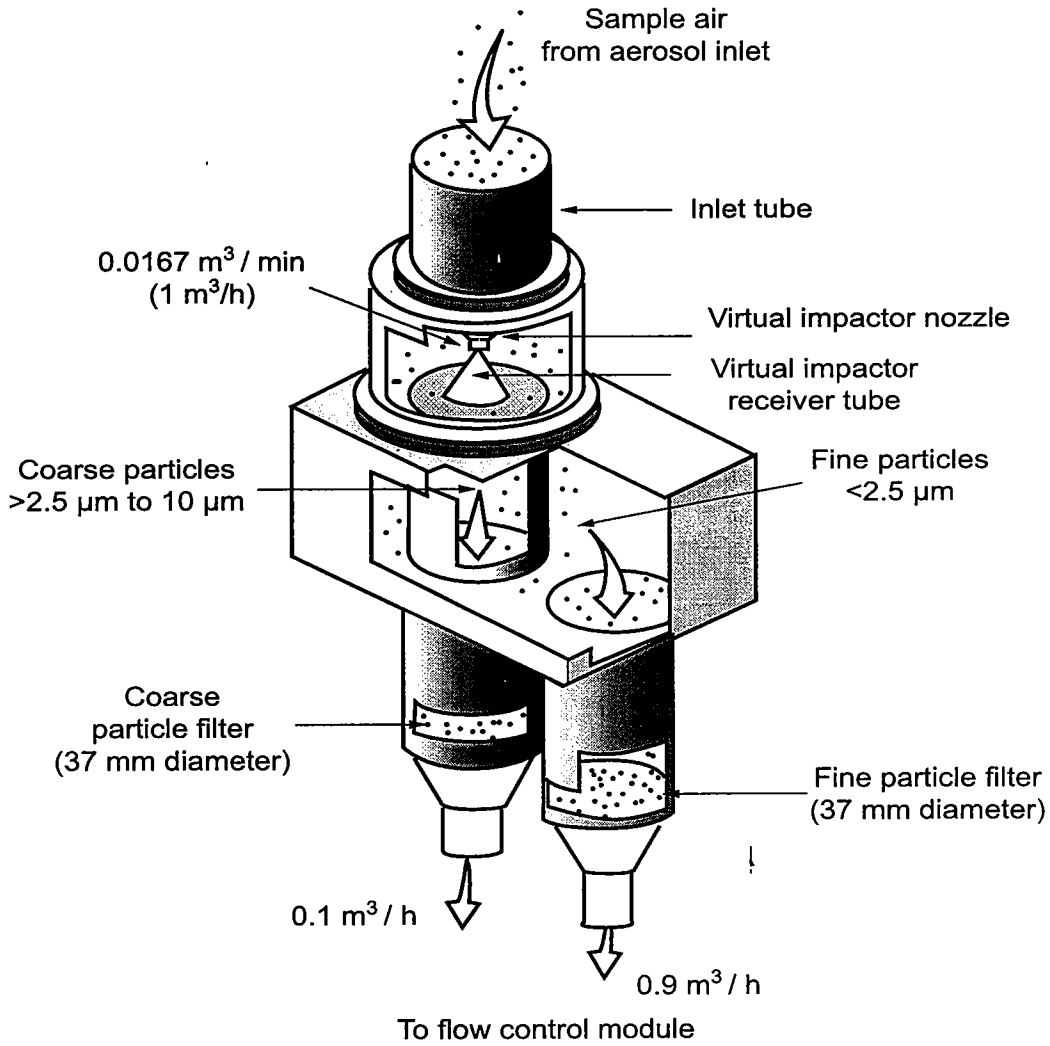

470-20-81

Control Module Cleaning Procedures

- Remove or open the front panel.
- Wipe down all surfaces.
- Take action to correct any obvious problems before completion of cleaning.
- Check rotameters for cleanliness.
- Remove and clean all filter jars.

470-20-82

Control Module Cleaning Procedures
(continued)

- Clean or replace any dirty filter elements.
- Clean the cooling fan blades.
- Clean exterior surfaces of the vacuum pump.
- Check all mounting brackets.

470-20-83

Vacuum Pump

- Diaphragm and flapper valves replaced routinely (at 1 year intervals) or if sudden reduction in sampler vacuum occurs

Refurbishing Dichotomous Samplers

- Refurbish after extended period of field operation.
- Refer to manufacturer's instructions.
- Leak check and calibrate before resuming field operation.

470-20-85

Auditing Procedures

- Audit Guidelines
- Types of Audits

Audit Guidelines

- No special preparation
- Conducted by another individual with thorough knowledge, not by routine operator
- Uses transfer standards that are completely independent of those used for routine calibration and QC flow checks
- Audit documentation information

470-20-87

Audit Documentation Information

Includes:

- Audit transfer standards and traceability
- Types of instruments, model and serial numbers
- Calibration information
- Collected audit data

470-20-88

Types of Audits

- Flow Rate Performance Audit
- Systems Audit of Data Processing
- Analytical Process System Evaluation

Flow Rate Performance Audit

- Audit Apparatus
- Total Flow Rate Audit Procedures
- Fine Flow Rate Audit Procedures
- Coarse Flow Rate Audit Procedures
- Audit Data Calculations
- Performance Audit Frequency

470-20-90

Audit Apparatus

- Any flow rate transfer device is acceptable as a routine calibrator for a dichotomous sampler.
- Transfer device must be different from one used to calibrate sampler.
- Audit device must be calibrated with a primary standard.
- Document audit information.

470-20-91

Document Audit Information

- Sampler and audit transfer standard type
- Model and serial numbers
- Transfer standard traceability and calibration information
- Ambient temperature and pressure conditions
- Collected audit data

470-20-92

Total Flow Rate Audit Procedures

- Install new filters in fine and coarse filter holders.
- Adjust the rotameter flow control to set the total and coarse rotameters to their operational set points for routine sampling.
- Allow the sampler to warm up.
- Complete data sheet with required information, ambient temperature (T_a), ambient barometric pressure (P_a), TSP and CSP values and corresponding flow rates.

470-20-93

Total Flow Rate Audit Procedures
(continued)

- Remove the sampler inlet and replace with transfer standard adaptive device.
- Connect the adapter to the transfer standard outlet.
- Recheck rotameter settings.
- Record TS readings (volts, ΔH_2O, timings, etc.).

Fine Flow Rate Audit Procedures

- Turn the sampler off and disconnect the coarse-flow 6.53 mm (1/4 in.) line.
- Cap the course flow outlet port.
- Turn the sampler on.
- Check the rotameter set points, record the total and coarse rotameter units and corresponding flow rate values.
- Record TS readings (volts, ΔH_2O, timings, etc.).

470-20-95

Coarse Flow Rate Audit Procedures

- Turn the sampler off and exchange the total and fine flow-rate transfer standard for the coarse flow transfer standard.
- Reconnect the coarse flow line and disconnect the fine flow line, cap the fine flow outlet port.
- Turn the sampler on.

Coarse Flow Rate Audit Procedures
(continued)

- Check rotameter set points, record the total and coarse rotameter units and their corresponding flow rate values.
- Record on TS readings (volts, ΔH_2O, timings, etc.).

Audit Data Calculations

- Calculate and record the audit total, fine, and coarse flow rates using the calibration curve.
- Correct audit flow rates to actual conditions.

Audit Data Calculations
(continued)

$$Q_a = Q_{std} (T_a/P_a) (P_{std}/T_{std})$$

Where:

Q_a = flow rate at actual conditions, L/min

Q_{std} = flow rate corrected to standard temp and pressure, L/min

T_a = ambient temp, K

P_a = ambient pressure, mm Hg or kPa

P_{std}, T_{std} = standard pressure and temperature

470-20-98b

Audit Data Calculations
(continued)

- Calculate the corresponding sampler flow rates and record.
- Determine the flow rate percentage difference.

$$\%\,\text{Difference} = [100]\left[\frac{Q_a\,(\text{sampler}) - Q_a\,(\text{audit})}{Q_a\,(\text{audit})}\right]$$

470-20-98c

Audit Data Calculations
(continued)

- Record percent difference.
- Before leaving site, make a comparison between flows.

470-20-98d

Performance Audit Frequency

- PSD monitoring requires audits once per quarter.
- SLAMS requires audits on 25% of samplers per network per quarter.

470-20-99

Systems Audit of Data Processing

- General Considerations
- Audit Procedures

General Considerations

- Systems audit conducted as soon as possible after the original calculations
- Minimum frequency of 7 samples per 100 - Recommended
- Minimum of 4 per lot - Recommended

Audit Procedures

- Use the operational flow rates.
- Independently compute the concentration.
- Compare it with the corresponding concentration originally reported.
- Record the audit values on a data sheet and report them, along with the original values.

Analytical Process System Evaluation

- General Considerations
- Procedures

470-20-103

General Considerations

- ASTM Class 1 standard weights
- Should not be operated by inexperienced personnel

Procedures

- Review the maintenance and calibration log.
- Review QC data records for the filter-weighing process.
- Have the balance operator randomly reweigh filters.
- Calculate the weight difference for each filter.

Review the Maintenance and Calibration Log

- Routine balance maintenance and calibrations are performed by the manufacturer's service representative at manufacturer-specified scheduled intervals.
- Calibration intervals should not exceed 1 year.

Review QC Data Records for the Filter-Weighing Process

- Zero and calibration checks after every 5 filter weighings
- Standard filter weighing every day of the balance operation
- Duplicate filter weighing for every five to seven filters
- If QC checks out of limits, note action taken

Have the Balance Operator Randomly Reweigh Filters

- Groups $\leq$ 50: 4 filters out of every group
- Groups of $\geq$ 50 and $\leq$ 100: 7 from each group

470-20-108

Calculate Weight Difference For Each Filter

- Difference = Original weight (mg) - Audit weight (mg)
- For unexposed filters, difference should be less than ± 20 µg
- For exposed filter, potential loss of volatile particles prohibits acceptance / rejection limits

Assessment of Monitoring Data for Precision and Accuracy

- Precision
- Accuracy

Precision

- Requires duplicate collocated sampling sites
- Number of collocated samplers
  - 1 to 5 sites = 1 site
  - 6 to 20 sites = 2 sites
  - More than 20 = 3 sites
- Same type of sampler
- Within 4 m of each other, at least 2 m apart
- Calibration, sampling, and analysis must be the same

470-20-111

Precision
(continued)

- One sampler designated as primary sampler, other designated as duplicate sampler
- Duplicate sampler must be operated concurrently with its primary sampler at least once per week
- Data from both sites are reported
- Percentage difference between the two samplers used to calculate precision as per 40 CFR Part 58, Appendix A

Accuracy

- Each quarter, audit flow rate of 25% of the samplers
- Each sampler audited at least once per year
- If fewer than four samplers per reporting organization, randomly audit one or more samplers so that one sampler is audited per quarter

Accuracy
(continued)

- Accuracy assessed by auditing performance of sampler
- Percentage difference between the flow rates is used to calculate accuracy as described in 40 CFR Part 58, Appendix A

Recommended Standards for Establishing Traceability

- ASTM Class 1, 1.1, or 2 weights for laboratory microbalance
- Positive displacement primary standard or laminar flow element for calibrating flow rate transfer standard
- Positive displacement primary standard for calibrating the transfer standard

Recommended Standards for Establishing Traceability
(continued)

- Elapsed time meter checked semiannually to within 15 min/day
- Accuracy checks of thermometers, barometers, stopwatches, etc., conducted at routine intervals and against standards of known accuracy and traceable to NIST